# EV-S800/S850PS
RMT-425

# SERVICE MANUAL

*AEP Model*
*(EV-S800)*

*West Germany Model*
*(EV-S850PS)*

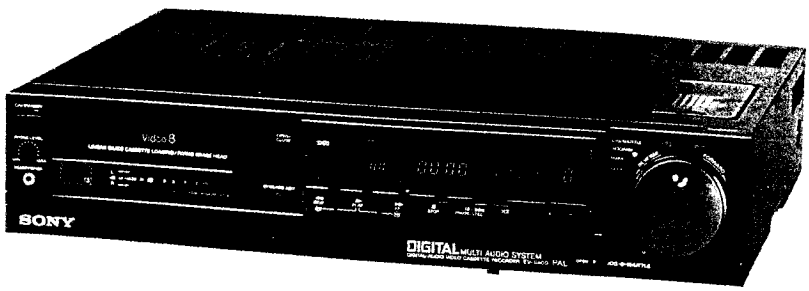


## SPECIFICATIONS

**System**

Video recording system
- Rotary two-head helical scanning
- Helical scanning FM system

Audio recording system
- Normal recording: Standard: Rotary head FM system (monaural)
  PCM: PCM system (2 channels)
- Digital multi audio recording: PCM system (2 channels, 6 tracks)

Colour system: EV-S800: CCIR system B,G and H, PAL colour
EV-S850PS: DDR SECAM to PAL colour, convertible

Usable cassettes: 8 mm video format casette

Tape speed: SP: Approx. 20.051 mm/sec.
LP: Approx. 10.058 mm/sec.

Recording or playback time
- SP: 1 hr. 30 min.
- LP: 3 hr.
- (P5-90)

Fast forward time: Approx. 3 min.

**PCM, Digital multi audio system**

| | |
|---|---|
| Sampling frequency | 31.25 kHz |
| Audio frequency | 20 Hz–15 kHz |
| Dynamic range | More than 90 dB |
| Wow and flutter | Less than 0.005 % RMS |

**Tuner section**

| | |
|---|---|
| Channel coverage | VHF E2–S20<br>UHF E21–E69 |
| Programming system | 30 programme-memories |
| RF output signal | UHF channels E30 to E39 (variable), 75 ohms, unbalanced |
| Aerial input | 75-ohm, asymmetrical serial socket |

—Continued on next page—

8 STEREO VIDEO CASSETTE RECORDER

SONY®

MICROFILM

VIDEO

**Inputs and outputs**

| | |
|---|---|
| Video input | |
| VIDEO IN | phono jack<br>1 Vp-p, 75 ohms, unbalanced, sync negative |
| Video outputs | |
| EURO-AV | 21-pin (pin 19)<br>1 Vp-p, 75 ohms, unbalanced, sync negative |
| VIDEO OUT | Phono jack<br>1 Vp-p, 75 ohms, unbalanced, sync negative |
| Audio inputs | |
| AUDIO IN | Phono jack<br>47 kilohms, −10 dBs (0 dBs = 0.775 V rms) |
| Audio outputs | |
| EURO-AV | 21-pin (pins 1 and 3)<br>Output impedance less than 1 kilohms −6 dBs with 10 kilohms load, unbalanced |
| AUDIO OUT | Phono jack<br>Output impedance less than 1 kilohms −10 dBs with 47 kilohms load, unbalanced |
| CONTROL L | 5-pin DIN |
| CONTROL S IN | Minijack |
| CONTROL S OUT | Minijack |
| Microphones inputs | Minijack −60 dBs, for low-impedance microphone |
| HEADPHONES jack | Stereo phone jack −20 dBs, 8 ohms |

**Timer**

| | |
|---|---|
| Clock | Crystal lock |
| Time indication | 24-hour cycle |
| Timer setting | Only for recording<br>6 events (3 weeks max. adjustable for any day or for all 7 days of the week) |

**General**

| | |
|---|---|
| Power requirements | 220 V AC, 50/60 Hz |
| Power consumption | EV-S800: 30 W<br>EV-S850PS: 34 W |
| Operating temperature | 5 °C to 40 °C (41 °F to 104 °F) |
| Storage temperature | −20 °C to +60 °C (−4 °F to +140 °F) |
| Dimensions | Approx. 430 × 89 × 328 mm incl. projecting parts and controls |
| Weight | Approx. 7.3 kg (EV-S850PS) 7.0kg (EV-S800) |
| Accessories supplied | 75-ohm coaxial cable for TV connection (1)<br>Connecting cord RK-74H (1)<br>Screwdriver (1)<br>Remote Commander RMT-425 (1)<br>Sony battery SUM-3 (NS) (3)<br>Feet (5) |

Design and specifications subject to change without notice.

## SAFETY CHECK-OUT

After correcting the original service problem, perform the following safety checks before releasing the set to the customer:

1. Check the area of your repair for unsoldered or poorly-soldered connections. Check the entire board surface for solder splashes and bridges.
2. Check the interboard wiring to ensure that no wires are "pinched" or contact high-wattage resistors.
3. Look for unauthorized replacement parts, particularly transistors, that were installed during a previous repair. Point them out to the customer and recommend their replacement.
4. Look for parts which, though functioning, show obvious signs of deterioration. Point them out to the customer and recommend their replacement.
5. Check the B+ voltage to see it is at the values specified.

**SAFETY-RELATED COMPONENT WARNING !!**

**COMPONENTS IDENTIFIED BY SHADING AND MARK ⚠ ON THE SCHEMATIC DIAGRAMS, EXPLODED VIEWS AND IN THE PARTS LIST ARE CRITICAL TO SAFE OPERATION. REPLACE THESE COMPONENTS WITH SONY PARTS WHOSE PART NUMBERS APPEAR AS SHOWN IN THIS MANUAL OR IN SUPPLEMENTS PUBLISHED BY SONY. CIRCUIT ADJUSTMENTS THAT ARE CRITICAL TO SAFE OPERATION ARE IDENTIFIED IN THIS MANUAL. FOLLOW THESE PROCEDURES WHENEVER CRITICAL COMPONENTS ARE REPLACED OR IMPROPER OPERATION IS SUSPECTED.**

TABLE OF CONTENTS


| Section | Title | Page |
|---|---|---|
| 1. | GENERAL | |
| 1-1. | Precautions | 6 |
| 1-2. | Location and Function of Controls | 7 |
| 1-3. | Adjustments | 15 |
| 1-4. | About Cassettes | 17 |
| 1-5. | TV Programme Recording | 18 |
| 1-6. | Playback | 21 |
| 1-7. | Digital Multi Audio Recording and Playback | 26 |
| 1-8. | Index Function | 29 |
| 1-9. | Timer-Activated Recording | 33 |
| 1-10. | About the VPS Switch | 36 |
| 1-11. | Use of the Sleep Timer | 37 |
| 1-12. | Tape Editing | 38 |
| 2. | DISASSEMBLY | |
| 2-1. | Removal of Cabinet Case | 45 |
| 2-2. | Removal of Front Panel | 45 |
| 2-3. | Opening of FT-13 Board | 46 |
| 2-4. | Opening of PW-30 Board | 46 |
| 2-5. | Removal of PR-13 Board | 47 |
| 2-6. | Opening of SP-2 Board | 47 |
| 2-7. | Removal of TS-50, TU-83 Board | 48 |
| 2-8. | Opening of VI-20 Board | 48 |
| 2-9. | Opening of AU-22 Board | 49 |
| 2-10. | Removal of DT-63 Board | 49 |
| 2-11. | Removal of RP-36 Board | 50 |
| 2-12. | Removal of DR-35 Board | 50 |
| 2-13. | Removal of Power Block | 51 |
| 2-14. | Removal of Cassette Compartment Assembly | 51 |
| 2-15. | Removal of Mechanical Block | 52 |
| 2-16. | Removal of VP-1 Board | 53 |
| 2-17. | Internal Views | 54 |
| 3. | DIAGRAMS | |
| 3-1. | Circuit Boards Location | 55 |
| 3-2. | Overall Block Diagram | 56 |
| 3-3. | Video Block Diagram | 59 |
| 3-4. | SECAM/PAL Conversion Block Diagram | 63 |
| 3-5. | Servo Block Diagram | 66 |
| 3-6. | System Control Block Diagram | 69 |
| 3-7. | System Control—REC PAUSE Block Interface | 72 |
| 3-8. | System Control—Video Block Interface | 72 |
| 3-9. | System Control—Capstan Motor Block Interface | 72 |
| 3-10. | System Control—Drum Motor Interface | 75 |
| 3-11. | System Control—Reel Motor Interface | 75 |
| 3-12. | System Control—ATF Servo Block Interface | 75 |
| 3-13. | System Control—STILL Block Interface | 77 |
| 3-14. | System Control—Head Change Block Interface | 77 |
| 3-15. | System Control—and others Block Interface | 77 |
| 3-16. | System Control—AFM Audio Block Interface | 77 |
| 3-17. | System Control—PCM Audio Block Interface | 79 |
| 3-18. | Sysrem Control—MD Block Interface | 79 |
| 3-19. | Tuner Block Diagram | 81 |
| 3-20. | Audio Block Diagram | 83 |
| 3-21. | PCM Audio Block Diagram | 86 |
| 3-22. | Timer/Mode Controll Block Diagram | 89 |
| 3-23. | Power Block Diagram | 92 |
| 4. | PRINTED WIRING BOARDS AND SCHEMATIC DIAGRAM | |
| 4-1. | Frame Schematic Diagram | 95 |
| 4-2. | Printed Wiring Boards and Schematic Diagram | 99 |
| | •RP-36 Board | 99 |
| | •VI-20 Board | 106 |
| | •CH-44, BS6324 and BS7443 Boards | 113 |
| | •TC-3 Board | 120 |
| | •SP-2, LS-9 and MS-4 Boards | 128 |
| | •SP-2 and RB-2 Boards | 138 |
| | •RS-17, TE-5, TE-6 and LD-1 Boards | 149 |
| | •SP-2 Board | 158 |
| | •AU-22 Board | 167 |
| | •AD-12, NR-6, MK-2 and MJ-11 Boards | 176 |
| | •AF-20 Board | 184 |
| | •PW-30 Board | 190 |
| | •TU-83, TS-50 and PR-13 Boards | 196 |
| | •FT-13, FR-24 and CB-8 Boards | 203 |
| | •VP-1 Board | 213 |
| | •DR-35, DT-63, DL-15, DO-1 and DS-16 Boards | 220 |
| 4-3. | Semiconductors | 226 |

| Section | Title | Page |
|---|---|---|
| 5. | EXPLODED VIEWS | |
| 5-1. | Front Panel and Case (Upper, Lower) Assemblies | 229 |
| 5-2. | Board and Power Block Assemblies | 230 |
| 5-3. | Board Assembly | 231 |
| 5-4. | Cassette Compartment Assembly | 232 |
| 5-5. | Chassis Assembly 1 | 233 |
| 5-6. | Chassis Assembly 2 | 234 |
| 5-7. | Chassis Assembly 3 | 235 |
| 5-8. | Chassis Assembly 4 | 236 |
| 5-9. | Hardware List | 237 |
| 6. | ELECTRICAL PARTS LIST | 238 |
| 7. | MECHANISM ADJUSTMENT | |
| 7-1. | Mechanical Check, Adjustment and Preparations for Replacement | 278 |
| 7-1-1. | Cassette Compartment Asseembly and Operation Without Tape Inserted | 275 |
| 7-1-2. | Handling of Mode Selector | 279 |
| 7-2. | Periodic Check and Maintenance | 281 |
| 7-2-1. | Cleaning of Rotary Drum Assembly | 281 |
| 7-2-2. | Cleaning of Tape Path | 281 |
| 7-2-3. | Cleaning of Drive System | 281 |
| 7-2-4. | Periodic Check | 282 |
| 7-2-5. | Service Jig Table | 283 |
| 7-3. | Mechanical Check, Adjustment and Replacement | 284 |
| 7-3-1. | S Reel Table Assembly | 284 |
| 7-3-2. | T Reel Table Assembly | 285 |
| 7-3-3. | Pinch Press Arm Assembly | 286 |
| 7-3-4. | Tension Regulator Arm Assembly | 287 |
| 7-3-5. | Tension Regulator Band Assembly | 288 |
| 7-3-6. | Loading Motor Assembly | 289 |
| 7-3-7. | Loading Ring Assembly | 290 |
| 7-3-8. | Pinch Roller Assembly | 292 |
| 7-3-9. | Slant Guide Assembly | 294 |
| 7-3-10. | Entrance Guide (P) Assembly | 295 |
| 7-3-11. | L Slider Assembly | 296 |
| 7-3-12. | L-SW Assembly | 297 |
| 7-3-13. | Plunger Solenoid | 299 |
| 7-3-14. | M-SW Assembly | 300 |
| 7-3-15. | M Slider | 302 |
| 7-3-16. | Capstan Motor | 304 |
| 7-3-17. | Rotary Upper Drum Replacement | 305 |
| 7-3-18. | Replacement of Drum Assembly | 307 |
| 7-3-19. | Adjustment After Replacement of No. 3 Guide and No. 4 Guide | 308 |
| 7-3-20. | No. 5 Guide Assembly | 308 |
| 7-3-21. | FWD Back Adjustment | 309 |
| 7-3-22. | Replacement of Reel Motor | 310 |
| 7-3-23. | Check of S and T Main Brake Torque | 311 |
| 7-3-24. | Check of S and T Soft Brake Torque | 312 |
| 7-3-25. | Check of REV and REW Brake Torque | 312 |
| 7-3-26. | Check by FWD, RVS Take-up Torque Cassette | 313 |
| 7-4. | Tape Path Adjustment | 314 |
| 7-4-1. | Connection with Track Shift and Monitor Jig | 316 |
| 7-4-2. | Preparation for Adjustment | 317 |
| 7-4-3. | Entrance Side Adjustment | 318 |
| 7-4-4. | Exit Side Adjustment | 320 |
| 7-4-5. | Checking after Adjustment | 321 |
| 8. | ELECTRICAL ADJUSTMENT | |
| 8-1. | Power Supply Adjustment | 327 |
| 8-1-1. | Oscillation Frequency Adjustment | 327 |
| 8-1-2. | REG 5V Adjustment | 327 |
| 8-1-3. | REG 12V Adjustment | 327 |
| 8-1-4. | Voltages Check | 327 |
| 8-2. | Servo System Adjustment | 328 |
| 8-2-1. | Reel Bias Adjustment | 328 |
| 8-2-2. | REC ATF Level Check | 328 |
| 8-2-3. | Drum Free Speed Adjustment | 328 |
| 8-2-4. | Capstan Free Speed Adjustment | 328 |
| 8-2-5. | Switching Position Adjustment | 329 |
| 8-2-6. | ATF BPF Balance Adjustment | 329 |
| 8-2-7. | SLOW Tracking Adjustment | 330 |
| 8-2-8. | Tracking Adjustment | 330 |
| 8-2-9. | STILL Adjustment | 330 |
| 8-2-10. | FORWARD SLOW Adjustment | 330 |
| 8-2-11. | SLOW $f_H$ Adjustment | 331 |
| 8-2-12. | SLOW $f_H$ Adjustment | 331 |
| 8-3. | Video System Adjustment | 331 |
| 8-3-1. | Playback Frequency Characteristic Adjustment | 332 |
| 8-3-2. | Flying Erase Check | 332 |
| 8-3-3. | Crystal Oscillator fo Adjustment | 333 |
| 8-3-4. | Chroma Comb Filter Adjustment | 333 |
| 8-3-5. | Y Comb Type Filter Adjustment | 333 |
| 8-3-6. | SYNC AGC Adjustment | 334 |
| 8-3-7. | VIDEO OUT Level Adjustment | 334 |
| 8-3-8. | PB Y Level Adjustment | 334 |
| 8-3-9. | Y FM Carrier Frequency Adjustment | 334 |
| 8-3-10. | Y FM Deviation Adjustment | 335 |
| 8-3-11. | Emphasis Adjustment | 335 |
| 8-3-12. | 375$f_H$ VCO Adjustment | 335 |

| Section | Title | Page |
|---|---|---|
| 8-3-13. | Chroma Emphasis fo Adjustment | 336 |
| 8-3-14. | Carrier Balance Adjustment | 336 |
| 8-3-15. | GCA Adjustment | 336 |
| 8-3-16. | $f_H$ VCO Adjustment | 337 |
| 8-3-17. | REC Y Level Adjustment | 337 |
| 8-3-18. | REC C Level Adjustment | 337 |
| 8-3-19. | REC AFM Level Check | 338 |
| 8-3-20. | REC ATF Level Check | 338 |
| 8-4. | Audio System Adjustment | 339 |
| 8-4-1. | PCM Audio System Adjustment | 339 |
| 1. | PCM Master Clock Adjustment | 339 |
| 2. | REC PCM Level Check | 339 |
| 3. | MULTI PILOT Frequency Check | 340 |
| 4. | PCM Playback VCO Free Oscillation Frequency Adjustment | 340 |
| 5. | MULTI PILOT Detector Adjustment | 340 |
| 6. | PCM Playback Level Adjustment | 340 |
| 7. | E-E Output Level Check | 341 |
| 8. | PCM Offset Adjustment | 341 |
| 9. | PCM Recording Level Adjustment | 341 |
| 10. | Overall Frequency Characteristic Check | 341 |
| 11. | Overall Distortion Ratio Check | 342 |
| 12. | Overall Noise Level Check | 342 |
| 8-4-2. | AFM Audio System Adjustment | 342 |
| 1. | AFM Carrier Frequency Adjustment | 342 |
| 2. | AFM Deviation Adjustment | 343 |
| 3. | E-E Output Level Check | 343 |
| 4. | Overall Level Characteristics Check | 343 |
| 5. | Overall Frequency Characteristics Check | 343 |
| 6. | Overall Distortion Check | 343 |
| 7. | Overall Noise Level Check | 344 |
| 8-5. | Tuner System Adjustment | 344 |
| 8-5-1. | $f_H$ Adjustment | 344 |
| 8-5-2. | Stereo Separation Adjustment | 344 |
| 8-6. | Timer System Adjustment | 344 |
| 8-7. | SECAM-PAL Conversion System Adjustment | 345 |
| 8-7-1. | $f_H$ VCO Adjustment | 345 |
| 8-7-2. | V Blanking Pulse Adjustment | 345 |
| 8-7-3. | Bell Filter Adjustment | 346 |
| 8-7-4. | FSC Adjustment | 346 |
| 8-7-5. | Demodulator Adjustment | 346 |
| 8-7-6. | Delay Line Adjustment | 347 |
| 8-7-7. | Y/C Mix Adjustment | 347 |
| 8-7-8. | PAL/SECAM Distinction Adjustment | 347 |
| 8-8. | Adjustment Element Location | 348 |
| | REMOTE COMMANDER (RMT-425) | 353 |

# SECTION 1
# GENERAL

## 1-1. PRECAUTIONS

### On safety

- Before operating, check that the operating power voltage and frequency of the unit are identical with those of your local power supply.
- Should any solid object or liquid fall into the cabinet, unplug the unit and have it checked by qualified personnel before operating it any further.
- Unplug the unit from the mains outlet if it is not to be used for an extended period of time. To disconnect the lead, pull it out by the plug. Never pull the lead itself.
- The unit is not disconnected from the mains (ac power source) as long as it is connected to the mains outlet, even if the unit itself has been turned off.

### On installation

- Allow adequate air circulation to prevent internal heat build-up. Do not cover the holes on the top panel.
- Do not place the unit on surfaces (rugs, blankets, etc.) or near materials (curtains, draperies) that may block the ventilation slots.
- Do not install the unit near heat sources such as radiators or air ducts or in a place subject to direct sunlight, excessive dust, mechanical vibration or shock.
- The unit is designed for operation in a horizontal position. Do not install it in an inclined position.
- Keep the unit and cassette tapes away from equipment with strong magnets, as for example a microwave oven or a large loudspeaker.
- Do not place any heavy object (over 13 kg or 28 lbs 10 oz) on the unit.
  Never place any object on the tuning compartment nor on the top of the front panel.

### On operation

- When the unit is not in use, turn the power off to conserve energy and to extend its useful life.
- Remove and store video cassettes after recording or playback.

### On cleaning

Clean the cabinet, panel and controls with a dry soft cloth, or a soft cloth lightly moistened with a mild detergent solution.
Do not use any type of solvent, such as alcohol or benzine which might damage the finish.

### On repacking

Do not throw away the carton and packing materials. They make an ideal container in which to transport the unit. When shipping the unit to another location, repack it as illustrated on the carton.

### On cassette care

Store cassettes in their cases and keep them in an upright position to prevent intrusion of dust and uneven winding.

If you have any questions about this unit, contact your Sony dealer.

## 1-2. LOCATION AND FUNCTION OF CONTROLS

A-1

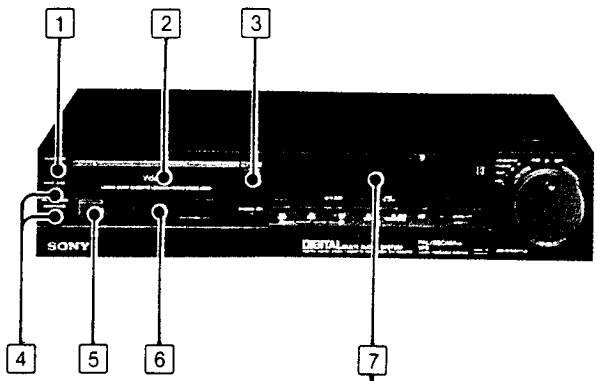


A-2

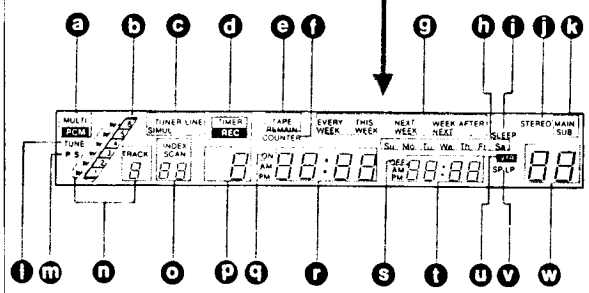


A-1

**1 ON/STANDBY switch and lamp**

**2 Cassette holder** (Page 17)

**3 OPEN/CLOSE button** (Page 17)
Press to slide out the cassette holder. Press again to slide it in.

**4 HEADPHONES jack (stereo mini type) and PHONE LEVEL control**
Connect stereo headphones (with stereo mini jack) here. Adjust the volume with the PHONE LEVEL control.

**5 REMOTE SENSOR**

**6 PEAK PROGRAM METER** (Page 26)
Shows the peak input levels of the right and left channels during recording and recorded levels during playback.

**7 Display window**

A-2

- ⓐ MULTI PCM or PCM indicator
- ⓑ Digital multi audio tracks indicator
- ⓒ Input signal indicator
- ⓓ TIMER REC indicator
- ⓔ TAPE REMAIN indicator
- ⓕ COUNTER indicator
- ⓖ Week indicator
- ⓗ Day of the week indicator
- ⓘ SLEEP indicator
- ⓙ STEREO indicator
- ⓚ Bilingual indicator
- ⓛ TUNE (tuning) indicator
- ⓜ P (Parallel) or S (Series) digital multi audio timer recording indicator
- ⓝ Digital multi audio track number and indicator
- ⓞ INDEX indicators
- ⓟ Timer programme position
- ⓠ Turn-on time setting indicator
- ⓡ Turn-on time of a timer recording/Tape counter/Tape remain indicator
- ⓢ Turn-off time setting indicator
- ⓣ Turn-off time of a timer recording/clock display
- ⓤ VTR indicator
- ⓥ Recording speed indicator
- ⓦ Programme number

A-3

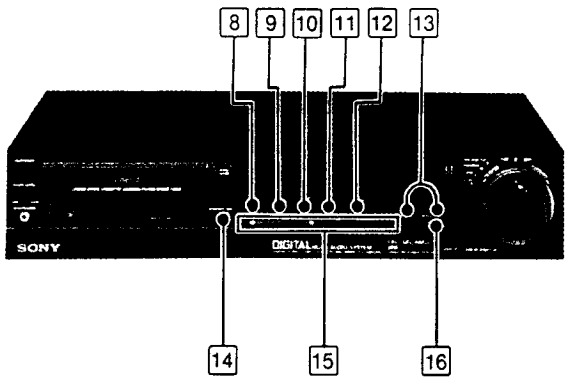


A-3

8 **COUNTER/REMAIN button** (Page 24)
Each time the button is pressed, the COUNTER and the TAPE REMAIN indicators are displayed alternately.

9 **COUNTER RESET button** (Page 24)
Press to reset the tape counter to "0000".

10 **GO TO ZERO button** (Page 25)
In stop mode, press to advance or rewind the tape approximately to the counter "0000".

11 **INDEX button** (Page 30)
Used for the index scan or index search operation.

12 **ANT TV/VTR button**
Press to view the programme selected on the recorder. The VTR indicator appears in the display window (VTR mode).
To view a TV programme while recording another, press this button again.
The VTR indicator disappears. (TV mode)

13 **PROGRAM/TRACK/INDEX buttons**
Press to: —change the programme
—change the track for digital multi audio recording/playback
—change the index number

14 **SYNCHRO EDIT lamp** (Pages 40–43)
Lights up when SYNCHRO EDIT inside the front panel is pressed.

15 **Tape transport buttons and indicators**
◀◀ REW (rewind)
▶ PLAY (playback)
▶▶ FF (fast forward)
■ STOP (stop)
❚❚ PAUSE (pause)/▶|◀ STILL (still)
x2 (double speed playback)

16 ● **REC (recording) switch**
Slide to the right to start recording.

A-4

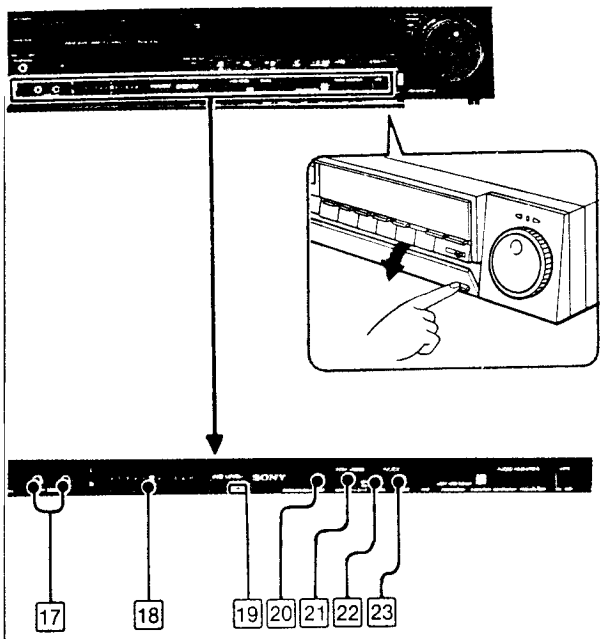


**Inside the front panel**

A-4

17 **MIC (microphone) jacks** (L, R) **(mini type)** (Page 44)
To record from these jacks, display LINE by pressing INPUT SELECT.

**Connection of the microphone and the track to be recorded**

| Track / Micro-phone jack | PCM track | | Standard track |
|---|---|---|---|
| | L channel | R channel | |
| L | Microphone sound | Microphone sound | Microphone sound |
| R | | Microphone sound | Microphone sound |
| L and R | 1) Micro-phone sound of the L jack | 2) Micro-phone sound of the R jack | 1) and 2) |

18 **REC LEVEL controls** (Page 26)
Slide to adjust the level of the PCM audio recording.

19 **SYNCHRO EDIT button** (Page 38)
Press to start the playback on this unit and the recording of the connected VTR (or vice versa; recording on this unit and playback on the other VTR). When pressed, SYNCHRO EDIT lamp lights up.

20 **EDIT button and lamp**
Normally keep the lamp off.
When editing a tape onto another recorder (or vice versa), press the button so that the lamp lights up.

21 **PCM MODE selector** (Page 25)
Select the method of PCM audio recording.
Set to: **NORMAL** for normal recording on the PCM track.
**DIGITAL MULTI P** (parallel) for timer recording from the beginning of each track.
**DIGITAL MULTI S** (series) for continuous timer recording in one of six tracks.

22 **INDEX MARK button** (Page 29)
Press to mark an index signal at the desired point during recording or playback.

23 **INDEX ERASE button** (Page 32)
To erase a pre-recorded index signal, locate the index signal and press this button.

A-5

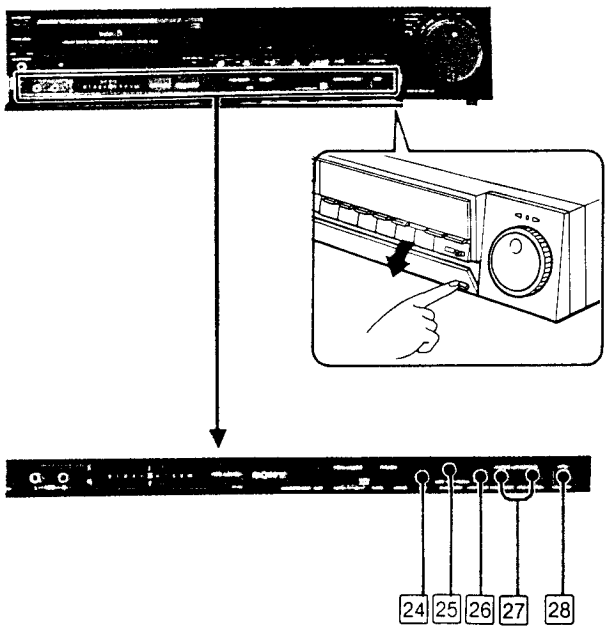


A-5

24 **PFS** (Picture Fine Select) **button and lamp**
Normally, keep the lamp off.
If the playback picture of a tape recorded on other VTRs (which do not use the four-video heads system) is distorted or has streaks, press so that the lamp lights up.

25 **SHARPNESS control**
Use to adjust the sharpness of the picture if necessary. Normally set the control at the center detent position.

26 **AUDIO DUB button** (Page 44)
Press to start recording on the PCM track of any recorded video tape.
Set PCM MODE 21 to NORM.

27 **AUDIO MONITOR selectors** (Page 21)
During playback or recording, set to the appropriate position to monitor the desired sound.

**MAIN/SUB/M. S selector**
When monitoring bilingual programmes or playing back a bilingual tape, press to display:
**MAIN:** to listen to the main language
**SUB:** to listen to the sub language
**MAIN. SUB:** to listen to the main language from the left speaker and the sub language from the right speaker.
A stereo tape with a pilot signal (the STEREO indicator appears) is played back in the stereo mode regardless of the position of this selector.

**PCM/MIX/STD selector**
**PCM:** to play back the sound on the PCM track. When nothing is recorded on the PCM track, the sound recorded on the standard track is played back regardless of the position of this selector.
**MIX:** to play back the sound on the PCM and standard tracks simultaneously.
**STD:** to play back the sound on the standard track.

28 **VPS** (Video Programme System) **switch** (EV-S850PS only) (Page 36)
Set to ON to activate the VPS in the timer recording.

A-6

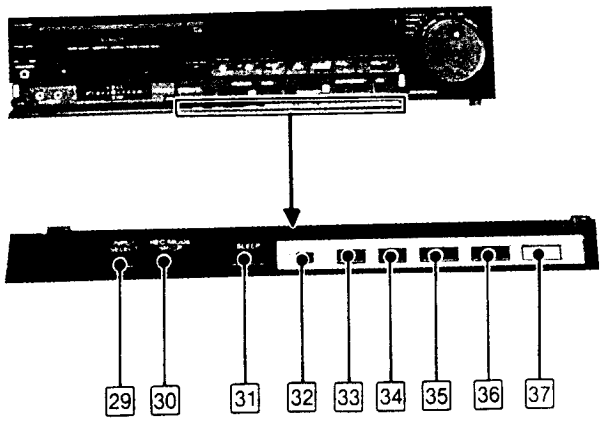


## On the front panel

A-6

**29 INPUT SELECT button**
Press to display the desired input signal indication in the window.
**TUNER:** to record TV programmes
**SIMUL:** to record TV programmes and signals from the AUDIO IN jacks.
**LINE:** to record audio/video signals from the AUDIO IN/ VIDEO IN jacks on the rear panel or to dub only audio signals from AUDIO IN or MIC jacks.

**30 REC MODE selector**
This selects the recording speed, SP or LP. The recording time of any given cassette in the LP mode is 2 times that in the SP mode.
The playback speed is automatically set regardless of the setting of this selector.

**31 SLEEP button** (Page 37)
Press to preset the turn-off time of this VTR. Playback or recording can be stopped with this timer.

**32 CLOCK SET button** (Page 16)
Press as the first step to set the internal clock.

**33 CHECK button** (Page 34)
Press to check the contents of the timer presettings.

**34 CLEAR button** (Page 34)
Press to cancel a timer setting.

**35 TIMER SET button** (Pages 33,34)
Press to start the setting or resetting of timer programmes.

**36 NEXT button** (Page 33)
Press to advance to the next item to be set when setting the timer or the clock.

**37 TIMER REC ON/OFF button** (Page 33)
Press after programming VTR for timer recordings so that the timer activates. To deactivate the timer, press again.

A-7

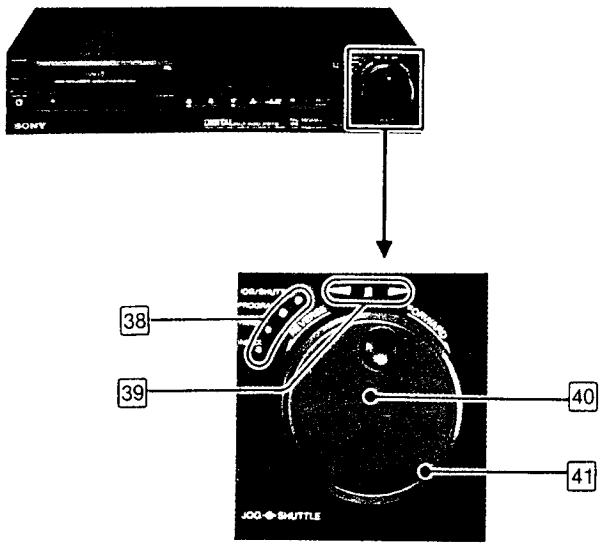


A-7

38 **JOG dial function indicators** (Page 23)
Light up to indicate for what purpose the JOG dial is being turned.
**JOG/SHUTTLE:** when the tape is being played back at the desired speed.
**PROGRAM:** When the TV programme or digital multi audio track is being selected.
**TIMER:** When the timer or clock is being set.
**INDEX:** When the index operation is being made.

39 **Playback indicators** (Page 23)
Indicate the forward or reverse movement or the pause mode of the tape during playback.

40 **JOG dial** (Page 23)
Turn to select programmes.
When this is turned during the playback pause mode, the picture will be played back at a speed according to the speed you are turning the dial. (From frame-by-frame to normal speed.) This dial is also used for setting the clock, presetting timer recordings, selecting any of the 6 digital multi audio tracks and for setting INDEX numbers.

41 **SHUTTLE ring** (Page 23)
When this ring is turned and held during the playback pause mode, you can play back the tape at various speeds: 1/5 normal speed, normal speed or double speed. The more it is turned, the faster the playback will be and when fully turned, the unit enters the "Picture search" mode in the right or in the reverse direction.

A-8

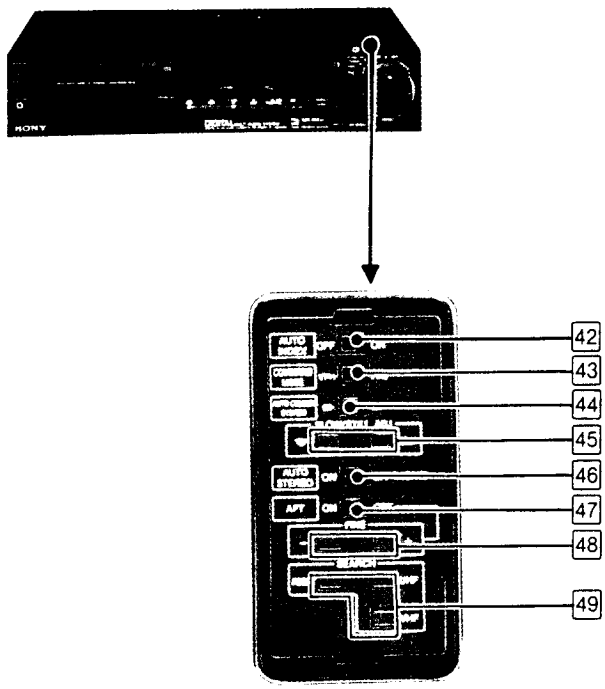


A-8

**Upper compartment**

42 **AUTO INDEX switch** (Page 29)
Normally set to OFF. To activate automatic marking of index signals during digital multi audio recording, set to ON.

43 **COMMAND MODE selector** (Pages 39,356)
To remotely control this unit with the supplied Remote Commander, set this selector to the same position as that on the Remote Commander.
When editing tapes, switch to the appropriate position accroding to the connection you have made.

44 **AUTO COLOUR SYSTEM switch** (EV-S850PS only)
Normally set to AUTO. According to the TV programme, colour system will be switched automatically to PAL or DDR SECAM.
If the signal is too weak or the picture is distorted, set the switch to PAL. DDR SECAM programmes will be displayed in black and white.

45 **SLOW/STILL ADJ (adjust) buttons** (Page 22)
Adjust the still or slow-motion picture if necessary.

46 **AUTO STEREO switch**
Normally set to ON. During a stereo broadcast, the mode is automatically set to stereo. If there is too much interference, set the switch to OFF in which case all the TV programmes will be received in monaural.

47 **AFT switch**
Normally set to ON. The automatic fine tuning circuit locks in and maintains a sharp picture.

48 **FINE buttons** (Page 16)
When the AFT switch is set to OFF, press to fine tune the station.

49 **SEARCH buttons** (Page15)
Press RESET to clear the programmed station. Press UHF or VHF to tune in a station of higher frequency.

A-9

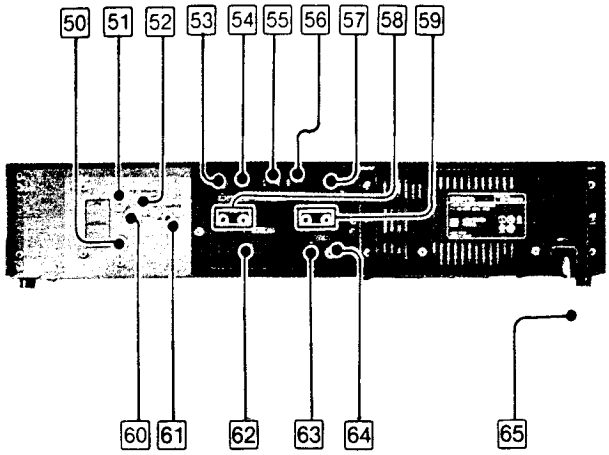


A-9

**Rear**

50 **AERIAL OUT socket**
Connect the aerial input of the TV receiver.

51 **AERIAL IN socket**
Connect the aerial cable.

52 **TEST SIGNAL switch** (Page 15)
Set to ON to obtain a test pattern.

53 **CONTROL S IN jack (mini type)** (Page 42)
Connect to the CONTROL S output jack of other Sony products.

54 **CONTROL S OUT jack (mini type)**
Connect to the CONTROL S input jack of other Sony products.

55 **DIGITAL MULTI PLAY selector**
Normally set to AUTO.
The playback mode will be automatically set to the digital multi audio mode. If no sound is heard when playing back a tape recorded on another VTR, set to MULTI.

56 **MASTER/SLAVE selector** (Page 39)
When editing a tape using the CONTROL L connector, set to either position:
MASTER: to control other equipment connected by the CONTROL L connector.
SLAVE: to be controlled by other equipment (such as RM-E100V editing controller) having control L connector.

57 **CONTROL L (5-pin) connector** (Pages 40,41)
Connect to the CONTROL L or REMOTE connector of other Sony products.

58 **AUDIO IN (L,R) (input) jacks (phono type)**

59 **AUDIO OUT (L,R) (output) jacks (phono type)**

60 **LOCAL/DX switch**
Normally set to DX. If the TV signal is very strong, set the switch to LOCAL.

61 **RF CHANNEL screw** (Page 15)
If there is interference on the factory-preset channel for RF output and the output signal from this unit cannot be displayed clearly on the TV screen, adjust the screw with the supplied screwdriver.

62 **EURO-AV connector (21-pin)**
Connect to the 21-pin connector of a VTR or a TV/monitor, or to the audio/video input and/or output of these units with an appropriate connecting cable.

63 **VIDEO IN (input) jack (phono type)**

64 **VIDEO OUT (output) jack (phono type)**

65 **AC power cord (mains lead)**
Connect to an ac (mains) outlet.

## 1-3. ADJUSTMENTS

B-1

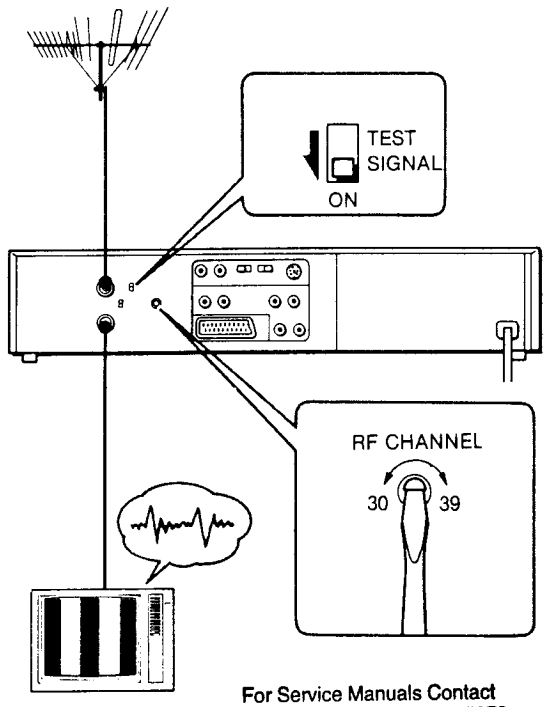


For Service Manuals Contact
MAURITRON TECHNICAL SERVICES
8 Cherry Tree Rd, Chinnor
Oxon OX9 4QY
Tel:- 01844-351694 Fax:- 01844-352554
Email:- enquiries@mauritron.co.uk

B-2

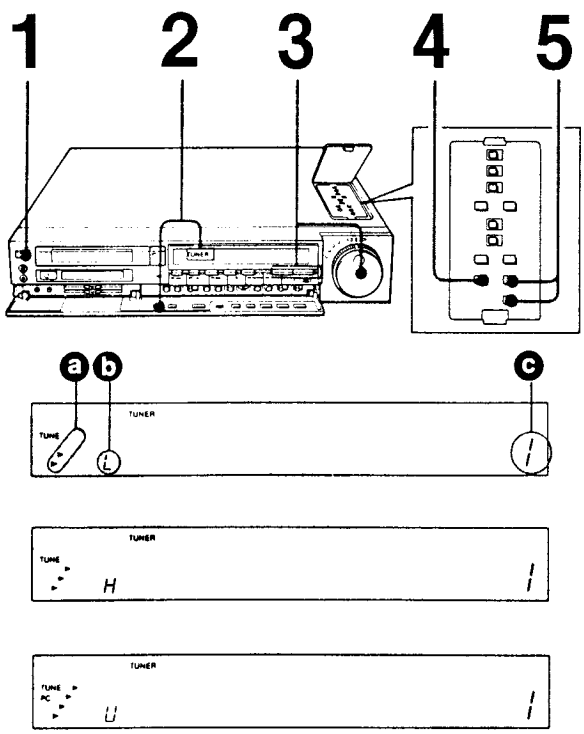


### ADJUSTING THE TV B-1

One of the television programme positions must be adjusted to receive the signal from the recorder.
Note that the adjustment is not necessary, however, when the VTR is connected to the AUDIO/VIDEO inputs on the TV/monitor.

1 After making the connections, press ON/STANDBY.
2 Make sure that the recorder is in the stop mode and the TV is in TV mode.
3 Set TEST SIGNAL at the rear of the recorder to ON. The test signal is transmitted on a channel between UHF channels 30 and 39.
4 Turn on the TV and select a programme position which is not being used to receive a TV station. Tune the channel until you see a clear black and white pattern on the TV screen and you hear a continuous tone. This is the recorder's test signal.

**If the test picture is free of disturbance,** the TV adjustment is complete. Set TEST SIGNAL to OFF.

**If the test picture is not free of disturbance,**

1 Reset TEST SIGNAL to OFF.
2 Adjust the channel of the TV to a channel between UHF channels 30 and 39 with the tuning control or the fine tuning control on the TV, so that the TV screen shows no picture and so that a steady rustling sound or no sound heard.
3 Set TEST SIGNAL to ON again.
4 Slowly turn RF CHANNEL on the rear of the recorder with the supplied screwdriver, until you see an undistorted test pattern on the TV screen.
5 Now the TV adjustment is complete. Reset TEST SIGNAL to OFF.

If you are not sure how to adjust your TV refer to the TV's instruction manual or consult your dealer.

### PROGRAMMING TV STATIONS B-2

Up to 30 programmes receivable in your area can be preset on this unit.
Once preset, you can select TV programmes by turning the JOG dial or pressing the +/– buttons.

1 Turn on the unit.
2 Display "TUNER" by pressing INPUT SELECT.
3 Turn the JOG dial or press PROGRAM/TRACK/INDEX + or – to select the programme position (0 to 30) on which the desired TV programme should be tuned in. ©
4 Press RESET in the upper compartment to clear the factory preset programmes.
5 Press UHF or VHF to search stations.
The tuning indicators in the window show the approximate location of the current channel. ⓐ
(ⓑ: Band indicator)
Each time a station is received, the search stops.
Press UHF or VHF again until the desired station is tuned in.
Repeat steps 3 to 5 for all the desired stations.

**To cancel an unused programme**

1 Select the programme to be cancelled with + or – PROGRAM/TRACK/INDEX.
2 Press RESET.

The cancelled programme will be skipped when + or – PROGRAM/TRACK/INDEX is pressed.
When the corresponding programme number button on the Commander is pressed, the sound of the cancelled programme will be cut out and no picture will be displayed.

**To fine tune a station**

If the picture of a particular station is not acceptable, set AFT in the upper compartment to OFF and keep + or – FINE pressed until the picture becomes clear. To view this particular station, set AFT to OFF.

## SETTING THE CLOCK B-3

B-3

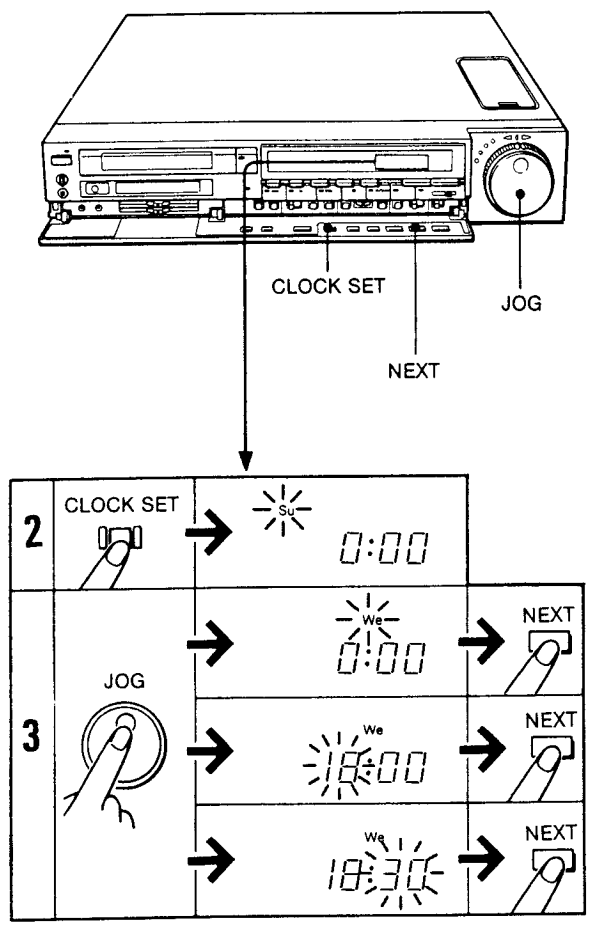


1 When you connect the unit to a mains outlet, the clock shows "Su 0:00".
2 Press CLOCK SET.
This turns the unit on.
3 Set day, hour and minute in sequence.
First adjust the blinking item by turning the JOG dial, and then press NEXT.
(ex. To set for Wednesday evening at 6:30)
For accurate setting, after adjusting the minute digit, press NEXT at the same time as an announced time signal.
The clock will now start and the dots of the colon will alternately blink every 30 seconds.
4 Press ON/STANDBY to turn off the unit.

**JOG dial**

Turn clockwise to advance the digits, and anticlockwise to reverse them.

**To readjust the previously set item during clock setting**

Press CLOCK SET again for a few seconds. Press NEXT until the item to be changed blinks and reset it. Then, terminate the setting by pressing NEXT enough times until the dots of the colon blinks.

**If a power interruption occurs,**

"Su 0:00" will lights up in the window.

## 1-4. ABOUT CASSETTES

C-1

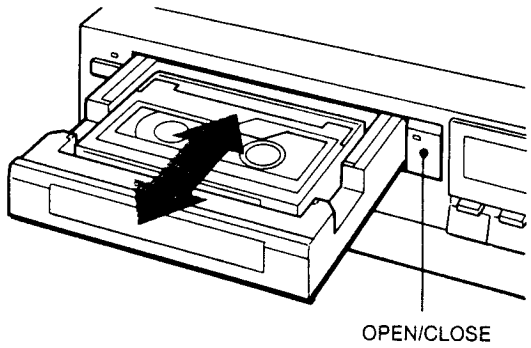


### INSERTION C-1

1 Press OPEN/CLOSE to open the cassette holder.
  Power will be supplied automatically with this step.
2 Place the cassette with the window side up.
3 Press OPEN/CLOSE to close the cassette holder.

### EJECTION

1 Press OPEN/CLOSE.
2 Remove the cassette and press OPEN/CLOSE.

**Notes**

- Always insert a cassette in the correct direction.
- The lamp inside the holder blinks while the tape is being loaded.
  Wait until the blinking stops before proceeding.
- The cassette holder can be closed by pressing itself manually.
  Never press it forcibly or the cassete may be ejected.
- Once the cassette is placed, you can close the holder by pressing ▶, ◀◀, ▶▶ or ● (REC).

C-2

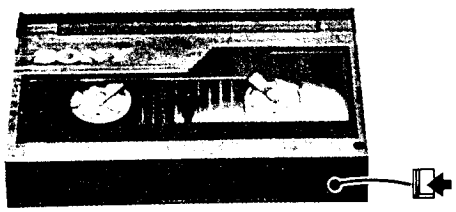

### TO PREVENT ACCIDENTAL ERASURE C-2

When a new recording is made on a previously recorded cassette, the previous recording will be automatically erased. To protect a recording, slide the tab out to cover the opening.
When the tab is out, a recording cannot be made. To re-record on a cassette, slide the tab in.

### RECORDING TIME, PLAYBACK TIME

The LP mode is twice as long as the SP mode. For better picture and sound, recording in the SP mode is recommended.
During playback, the mode in which the tape was recorded is selected automatically.

| Cassette used | SP mode | LP mode |
|---|---|---|
| P5–30 | 30 min. | 1 hr. |
| P5–60 | 60 min. | 2 hr. |
| P5–90 | 90 min. | 3 hr. |

**Note**

Never insert anything in the small holes on the rear of the cassette.

## 1-5. TV PROGRAMME RECORDING

Make sure that you have finished all the connections and adjustments on pages 15 through 17.

D-1

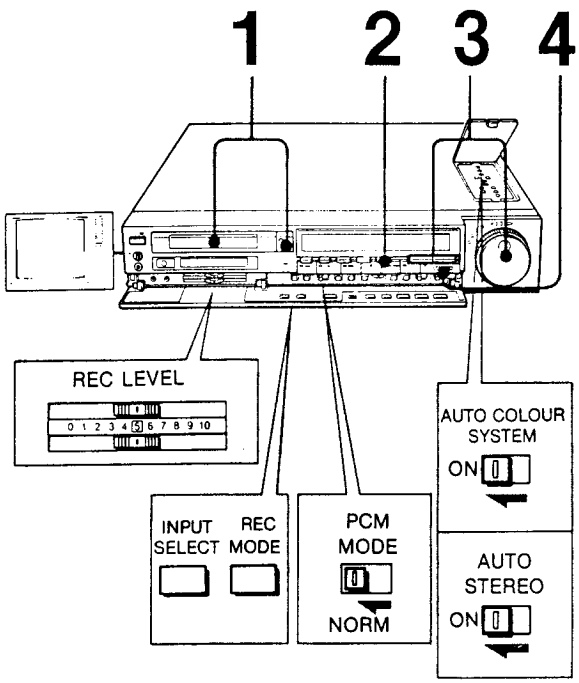


### OPERATION D-1

**Before recording**

- Turn on the TV and select the channel for the recorder or select the input for the recorder.*
- Check the position of the selectors:

| Press | to display |
|---|---|
| INPUT SELECT | TUNER |
| REC MODE | SP or LP |

| Set | to |
|---|---|
| PCM MODE | NORM |
| AUTO STEREO | ON |
| AUTO COLOUR SYSTEM (EV-S850PS only) | ON |

- Set REC LEVEL to "5".

1 Insert a cassette.
2 Press ANT TV/VTR so that the "VTR" indicator is displayed.
3 Select the programme to be recorded with JOG or +/– PROGRAM/TRACK/INDEX.
4 Slide ● REC to the right.

**To stop recording**
Press ■ STOP.

**To stop recording for a moment**
Press ❚❚/▶◀ PAUSE/STILL. The TV programme can still be seen on the TV, but the picture is not recorded.
To resume recording, press ❚❚/▶◀ PAUSE/STILL again.
To protect the video heads and the tape, the pause mode will be automatically released after about 7 minutes and recording will stop. Smooth recordings can be made by using ❚❚/▶◀ PAUSE/STILL. See page 19.

**When the recording is made to the end of the tape,**
the tape will be automatically rewound to the beginning and the unit will enter the stop mode. The power remains on.

* • **If your TV/monitor is equipped with audio/video inputs or a multiconnector,** select the correct input on your TV/monitor.
  • **If your TV/monitor is equipped with SCART (CENELEC) or PERI-TV connector,** the input signal is selected automatically when you display "VTR" with the recorder.

**During recording...**

**If stereo programmes are received,**
"STEREO" indicator will be displayed in the window.

**If bilingual programmes are received,**
select the sound to be monitored with AUDIO MONITOR MAIN/SUB/MAIN. SUB.

D-2

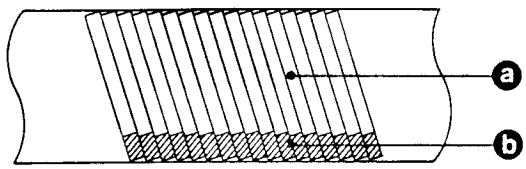


**Recording is made as follows:** D-2

ⓐ **Standard track**
Video/audio signals of the TV programme and the main sound of a bilingual programme are recorded here.
Recorded sounds are monaural.

ⓑ **PCM track**
Audio signals from the connected equipment or from TV are recorded in digital PCM sound. Sound can either be in monaural (when sounds for left and right channel are the same) or in stereo (each sound for left and right channels).

## FOR SMOOTH RECORDING

Recording should always be started from the recording pause mode for smooth transitions between scenes. Proceed as follows if the recording was stopped or if you want to record on a pre-recorded tape from a desired point.

**To start recording from a particular point**
You can decide the starting point for recording while watching the picture.

1 Play back the tape and locate the point for recording while watching the picture.
2 Press ❚❚/▶◀ PAUSE/STILL to stop the tape where you wish to start recording.
3 Slide ● REC to the right. The recorder will enter the recording pause mode.
4 Press ❚❚/▶◀ PAUSE/STILL at the desired point to release the pause mode.
Recording starts.

**Note**

Be sure not to change the position of REC MODE (SP/LP) between different scenes. Particularly, if you change the switch from LP to SP, a short blank will be recorded.

Frame-by-frame recording
If ● REC is slid to the right while the unit is in the recording pause mode, a short recording of approx. 7 seconds will be made, and then the unit enters the recording pause mode again.
Repeat this operation as many times as you like.

## TO VIEW ONE TV PROGRMME WHILE RECORDING ANOTHER

1 Press TV/VTR so that the "VTR" indicator disappers from the window.
2 Select the programme you want to view on the TV.

If your TV is equipped with a TV/VTR input selector, simply set the selector to "TV" and select the programme on the TV.

D-3

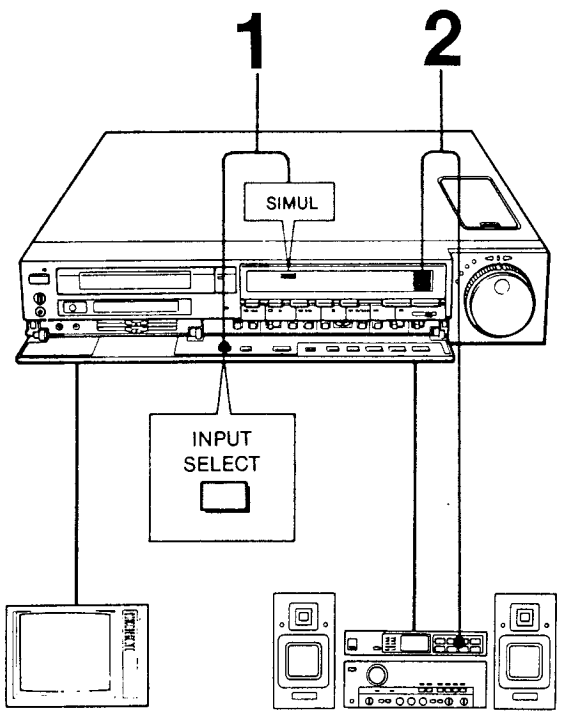


## TO RECORD A TV PROGRAMME WHILE RECORDING AN FM BROADCAST AT THE SAME TIME — FM simulcast recording D-3

Sometimes a TV station and an FM radio station will broadcast a programme simultaneously so that you can record a TV programme in high-fidelity stereo. The TV programme (video and monaural audio) is recorded normally on the standard track and the stereo audio portion is recorded on the PCM track from your FM tuner.

For details on connection.

**Operation**
Operate as described in "TV programme recording" on page 18 except the following points:
1 Press INPUT SELECT so that the "SIMUL" indication appears in the window.
2 Select the programme both on the VTR and the FM tuner.

Recording will be made as follows: D-4
ⓐ **Standard track**
Video and audio signals of the TV programme will be recorded here.
ⓑ **PCM track**
FM broadcast programme from the FM tuner will be recorded in stereo.

D-4

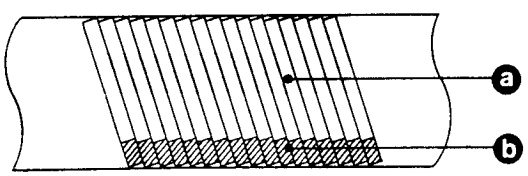

## 1-6. PLAYBACK

E-1

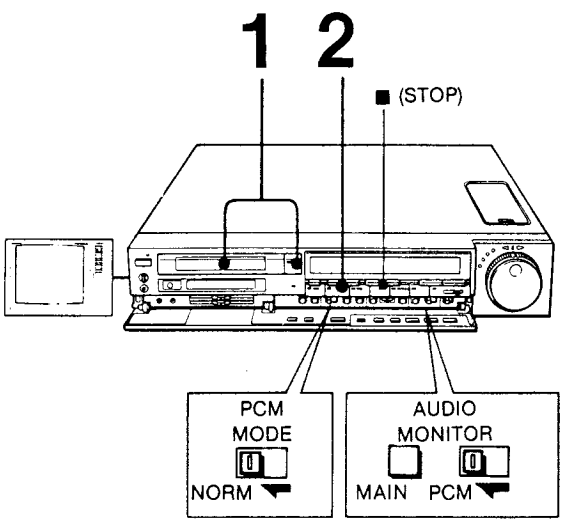


E-1

**Before playing back**

- Turn on the TV and select the channel for the recorder or select the input for the recorder.*
- Check the position of the selectors:

| Set | to |
|---|---|
| PCM MODE | NORM |
| AUDIO MONITOR | |
| Press MAIN/SUB/M.S. | to display MAIN |
| Set PCM/MIX/STD | to PCM |

— Set as above, you can listen to the MAIN language of the bilingual programme and the stereo sound recorded on the PCM track of the tape.
— When nothing is recoded on the PCM track, you will automatically hear the sound recorded on the STD track.

To monitor other kinds of sound, change these settings. See "To select the monitor sound" below.

**Note**

If the picture is not displayed and/or the sound is not heard or heard only intermittently when a tape which has been recorded on a video camera recorder or a video cassette recorder without the PCM function is played back on this unit, set AUDIO MONITOR on this unit to STD. (Although AUDIO MONITOR is set to STD, the "PCM" indicator may occasionally light up.)

### OPERATION

1 Insert a cassette.
2 Press ▶ PLAY.

**To stop playing back**

Press ■ STOP.

**To select the monitor sound**

| Kind of the tape (conditions of recorded signals) | Track to be played back | Position of the selector | |
|---|---|---|---|
| | | MAIN/ SUB/M.S. | PCM/MIX/ STD |
| Stereo | PCM | — | PCM |
| FM simulcast (Page 20) | PCM | — | PCM |
| Bilingual | PCM | MAIN, SUB or M.S | PCM |
| Audio dubbed (Page 44) | PCM and STD | — | MIX |

"—" means that the selector can be set to any of its position.

* • **If your TV/monitor is equipped audio/video inputs or a multi-connector,** select the correct input on your TV/monitor.
  • **If your TV/monitor is equipped with SCART (CENELEC) or PERI-TV connector,** the input signal is selected automatically when you display "VTR" with the recorder.

**To advance or rewind the tape rapidly**
Press ▶▶ FF or ◀◀ REW respectively in the stop mode.
To stop the tape, press ■ STOP.

**Auto play — To play back a tape from the beginning of the tape after rewinding**
Press ▶ PLAY keeping ◀◀ REW depressed, or press AUTO PB on the Remote Commander.
After the tape is completely rewound, it will automatically be played back.

## VARIOUS PLAYBACK MODES

Use the buttons on the recorder or on the Remote Commander.

**Picture search — viewing the picture at a fast speed to find a particular scene**
Keep pressing ▶▶ FF or ◀◀ REW during playback.
When you release the button, the normal playback will be resumed.

E-2

Streaks appear and the sound is muted during "Picture search" and "Still picture". E-2

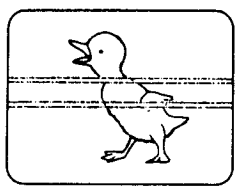

**Still picture** (playback pause)
Press ❚❚/▶|◀ PAUSE/STILL during playback. The sound is muted.
To resume normal playback, press ❚❚/▶|◀ PAUSE/STILL again or press ▶ PLAY.

To protect the video heads and the tape, the pausè mode will be automatically released after about 7 minutes and playback will be resumed.

**To obtain better playback picture in variable playback modes**
- **If the still picture seems to shake,** press + or − SLOW/STILL ADJ in the upper compartment until the picture stabilizes.
- **If streaks or noise bands appear in still, frame-by-frame, normal** (x1), **double** (x2), **1/10 or 1/5 speed picture,** set to 1/10 or 1/5 speed picture mode and press + or − SLOW/STILL ADJ.

## VARIOUS SPEED PLAYBACK USING THE JOG DIAL AND SHUTTLE RING

E-3

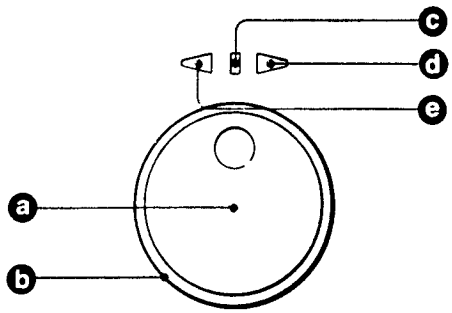


E-4

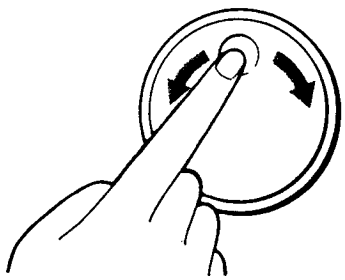

E-5

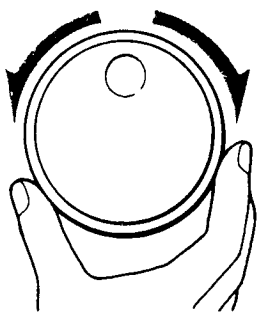

E-3

ⓐ JOG dial
ⓑ SHUTTLE ring
ⓒ Lights when JOG and SHUTTLE are operable or in use.
ⓓ Indicates the forward playback.
ⓔ Indicates the reverse playback.

**Using the JOG dial** E-4

1 Play back a tape and stop the playback by pressing ❚❚/▶◀ PAUSE/STILL.
2 Turn the JOG dial.
The tape will be played back at the speed at which you are turning the dial (1/10, 1/5 or normal speed). Turn it clockwise for forward playback, or anticlockwise for reverse playback.
3 When you stop turning the JOG dial, the still picture will be displayed.

**Using the SHUTTLE ring** E-5

1 Play back a tape and stop the playback by pressing ❚❚/▶◀ PAUSE/STILL.
2 Turn the SHUTTLE ring and hold it at the position where the desired playback speed is obtained.
You can select 1/5, normal, double or continuous picture search speed.
Turn it clockwise for forward playback, or anticlockwise for reverse playback.
3 When the SHUTTLE ring is released, the still picture will be displayed.

**To use the JOG dial and SHUTTLE ring on the Remote Commander**

Before operating JOG or SHUTTLE, press the JOG SHUTTLE function button on the Commander so that the associated indicator lights. The VTR will enter playback pause mode.
If JOG and SHUTTLE on the Commander are not used for more than one minute, their function will be released automatically in order to prevent undue battery wear. To use JOG and SHUTTLE again, press the JOG SHUTTLE function button once more.

- JOG and SHUTTLE on the Commander will function in still picture and various speed playback modes.
- Once you have used JOG and SHUTTLE on the Commander for various speed playback, then, JOG and SHUTTLE on the unit will not function.

E-6

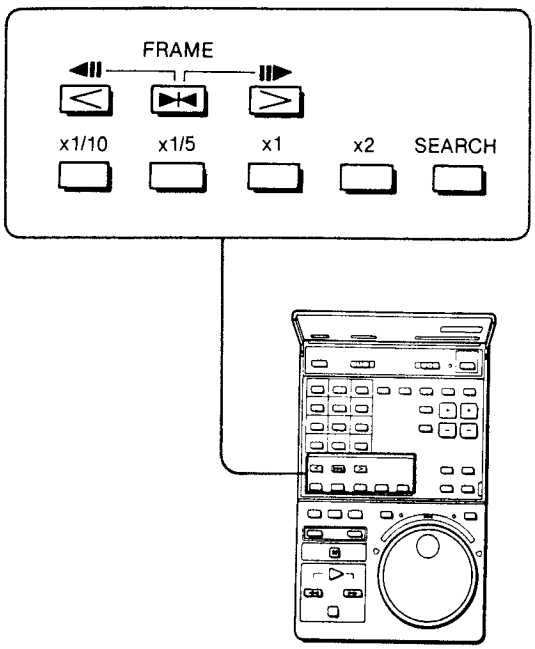


## VARIOUS PLAYBACK MODES USING THE REMOTE COMMANDER E-6

**Frame-by-frame picture**
Press FRAME ▮▮▶ (forward) or ◀▮▮ (reverse) in still picture mode.
Press ▶ PLAY to resume normal playback.

**Variable speed playback**
Press the desired speed button during playback or in still picture mode. The sound is muted (except in x1 and x2 forward picture).
▶◀: still picture
x1/10: slow motion picture at 1/10 normal speed
x1/5: slow motion picture at 1/5 normal speed
x1: normal speed picture
x2: double speed picture
SEARCH: continuous picture search

**To reverse the direction of the variable speed playback,** press ◀▮▮. To resume forward playback, press ▮▮▶.

**To change the playback speed,** simply press the desired speed button.

**To resume normal playback,** press ▶ PLAY.

## USE OF THE TAPE COUNTER

The tape counter indicates the relative position of programmes on the tape.

F-1

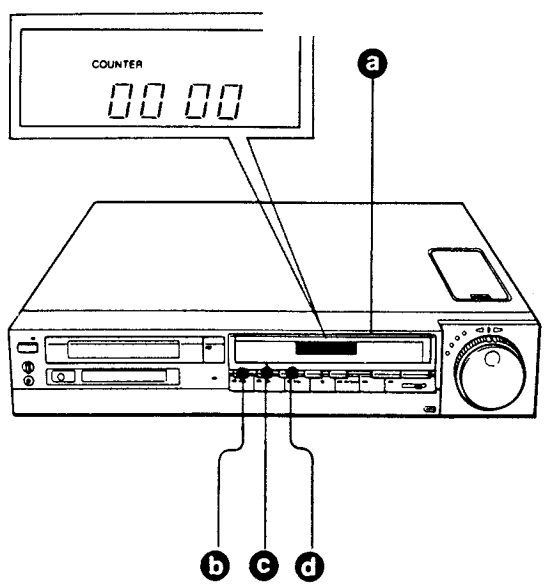


F-1

ⓐ Display window
ⓑ COUNTER/REMAIN
ⓒ COUNTER RESET
ⓓ GO TO ZERO

**To index the tape contents**
Before starting recording or playback, press COUNTER RESET to set the counter to 0000. By noting the counter reading at the desired point, you can easily find that point later by referring to the counter.
Note to list the programmes and their counter readings.

**Notes**

- The counter reading is automatically reset to zero when a cassette is newly inserted.
- The counter reading will be retained in the memory even after the power is turned off, as long as the cassette is kept inserted in the cassette holder.
- The counter reading will not exactly correspond to the position of the tape after the tape has been stopped or run repeatedly in fast-forward or rewind modes.

F-2

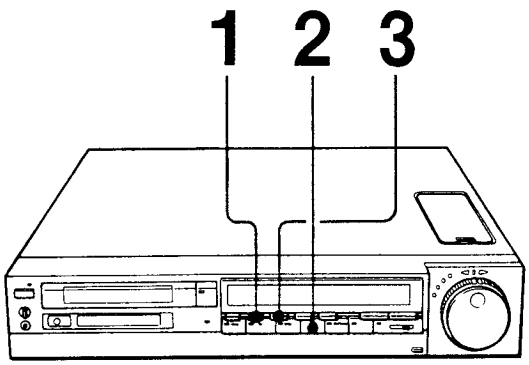


**GO TO ZERO — To stop the tape at a particular point** F-2

1 During recording or playback, press COUNTER RESET at the point you want to locate later.
2 When recording or playback is finished, stop the tape.
3 Press GO TO ZERO.
The tape will be rewound or advanced close to the counter 0000 point.

**GO TO ZERO play — To start playback automatically from the counter zero point**

Press ▶ PLAY after pressing GO TO ZERO.
The indicator on ▶ PLAY will blink.

**To check the remaining recording or playback time** F-3

During recording or playback, press COUNTER/REMAIN.

The displayed remaining time will decrease as the recording or playback goes on.
To display the tape counter, press COUNTER/REMAIN again.

F-3

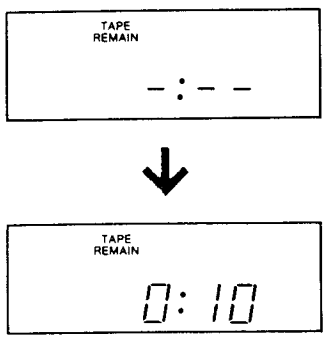


**Notes**

- The remaining time appears only after the "-:--" indication has been displayed for several seconds.
- If you want to display the remaining time during x2 (in the right direction) and x1, x2 (in the reverse direction), first display the remaining time in the normal playback mode. Then, set in the above speed and press COUNTER/REMAIN.
- During the frame-by-frame or the slow-speed playback, the display indicates the remaining time when the playback started.
- On the accuracy of the remaining time counter:
  —For commercially available recorded tapes, the counter will not indicate the exactly same time as the recorded time labeled on the tape.
  —For damaged tapes and nonstandard tapes, the accuracy will be degraded.
  —At the beginning of a tape, especially when the tape has just been rewound, the remaining time will be calculated greater than the actual time (by several minutes max.).

## 1-7. DIGITAL MULTI AUDIO RECORDING AND PLAYBACK

G-1

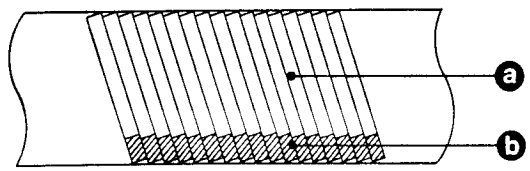


G-2

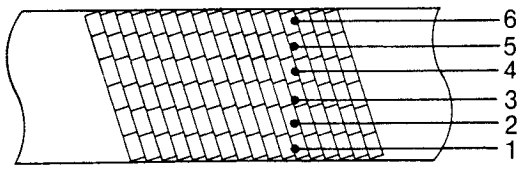


G-3

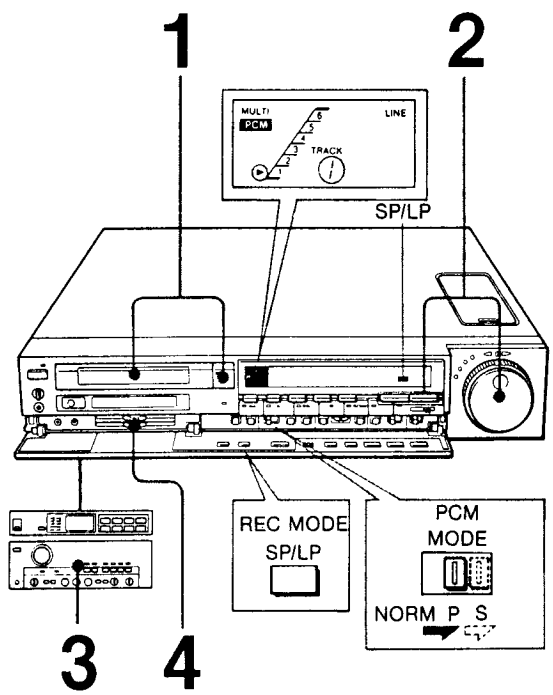


G-4

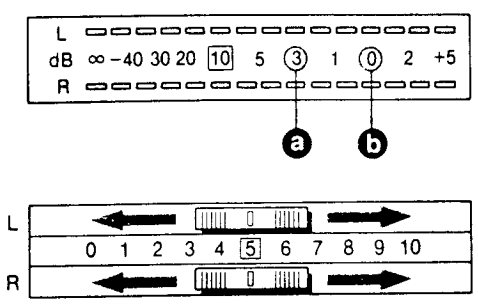


Normally, both the video and audio signals can be recorded on your video tape.

G-1

ⓐ Video + audio
ⓑ Audio

However, you can record up to 6 tracks of only the audio signals in the digital mode, using the full width of the tape. This is called digital multi audio recording, providing a high-fidelity stereo sound. G-2

To connect the VTR to your audio system.

### RECORDING G-3

**Before recording**
Check the position of the selectors:

| Set | to |
|---|---|
| REC MODE | SP or LP |
| PCM MODE | P or S* |

*Set to either of two positions. They activate in the same way.

**Operation**
1 Insert a cassette.
2 Turn JOG or press +/– PROGRAM/TRACK/INDEX to select the digital multi audio track on which recording should be made.
—Adjust "▶" (red indication) to the desired track.
3 Turn on the power on the audio equipment and set to the playback mode.
4 Adjust REC LEVEL.
Verify the adjustment with the peak level meter of the recorder.

**Recording level adjustment** G-4
Referring the peak level meter, manually adjust the recording level with REC LEVEL.

Select the best recording level for each source as follows:
**When recording sources with many high frequency signals** (ex: trampets etc) set so that the peak programme meters deflect –3 dBs. ⓐ
**When recording sources with midium or lower frequency signals** (ex: vocals) set so that the peak programme meters deflect 0 dB. ⓑ

During playback, you can read the recorded level on the peak level meter.

## TIMER RECORDING

If you connect any audio tuner with timer presetting functions, you can record up to 6 radio programmes in the digital PCM sound.

6 programmes can be recorded either on 6 separate audio tracks (for parallel recording) or they can be recorded successively on one track (for series recording).

G-5

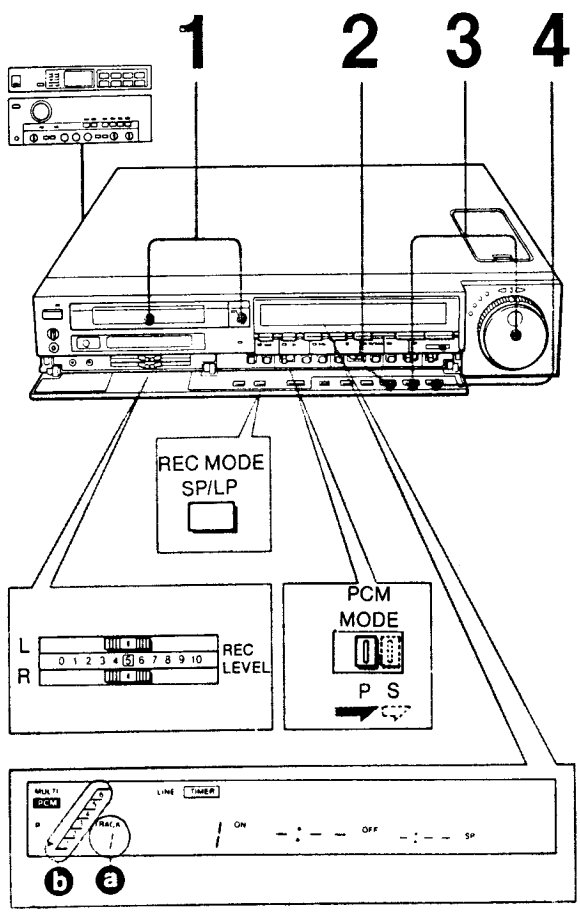


**Before presetting** G-5

- Turn on the audio tuner.
- Check if the clock is set correctly. (Page 16.)
- Check the position of selectors:

| Press | to display |
|---|---|
| REC MODE | SP or LP |

| Set | to |
|---|---|
| PCM MODE | P (parallel) or S (series) |
| REC LEVEL | "5" |

**Presetting**

1 Insert a cassette.
2 Press TIMER SET.
3 Set the following items by turning JOG and pressing NEXT.
   — audio track (Set the track number displayed in numeral.) ⓐ
   — day of the week
   — recording starting time
   — ending time
   (Refer to "Timer-activated recording" on page 33.)
4 Press TIMER REC.

**Notes**

- After having set the timer, do not change the position of PCM MODE because the timer recording will not be made correctly.
- Timer presettings of TV programme recordings and digital multi audio recordings can be made on one tape. However, such presettings are not recommended because you must verify the position of the PCM MODE switch before each timer recordings.
- **To preset or check the digital multi audio track while you are using this unit**
  1) When the unit is in digital multi audio playback/recording
     ⓐ The track for presetting. Set with JOG.
     ⓑ The track on which playback or recording is being made. Select with PROGRAM/TRACK/INDEX.
  2) When the unit is in normal playback/recording
     ⓐ+ⓑ The track for presetting. Set with JOG.

G-6

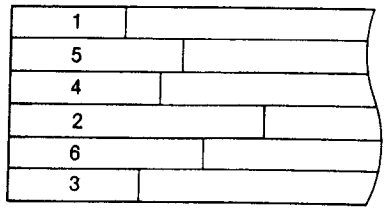


G-7

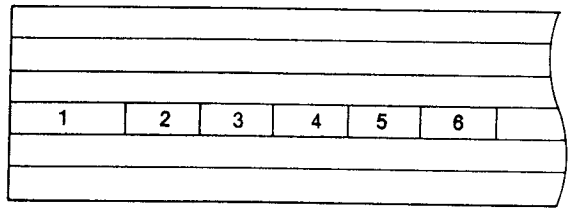


**Parallel and series recordings**

**Parallel recording** — stereo recording of one programme on each track

- After a programme is recorded on one track, then, another recording will begin on another track from the beginning of the tape.
- You can select the track in any order for any programme. G-6

**Series recording** — Stereo recording in series on only a single track

- After one programme is recorded, another one is recorded successively on the same track. G-7

**Notes**

**On parallel recording**

- If a programme is already preset on a track, you cannot preset another programme on the same track.
- For the first timer-recording programme, the tape will not be rewound automatically to the beginning. The recording will start from the current position of the tape.
- If the next programme starts before the tape has been rewound completely, the beginning of the programme will not be recorded.

**On series recording**

- The track on which timer recordings are made, is the track that is selected in the last timer programme setting.
- After all the preset programmes are preset, the tape will not be rewound to the beginning.

## PLAYBACK G-8

G-8

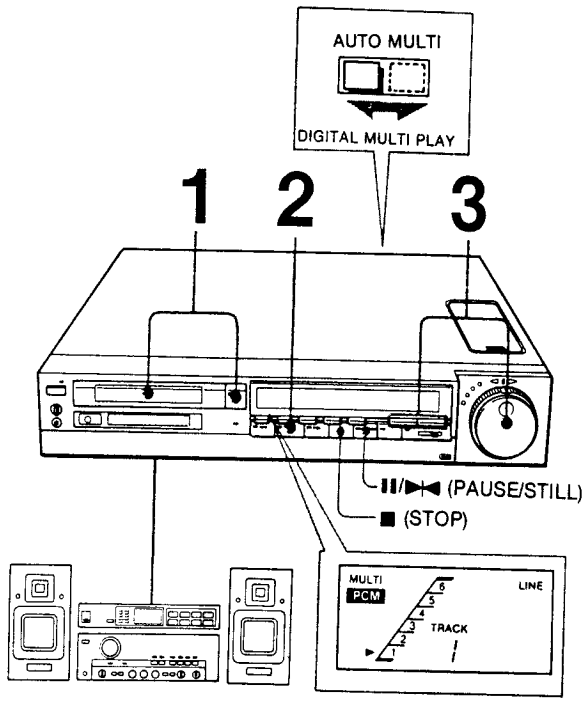


**Before playback**

- Turn on the audio system so that sound is heard from speakers.
- Set DIGITAL MULTI PLAY on the rear to:
  AUTO for playing back tapes recorded by this VTR.
  MULTI for playing back tapes recorded by other VTRs (when their sound cannot be heard with the switch set to AUTO).

**Playback**

1 Insert a cassette.
2 Press ▶ PLAY.
3 Turn JOG or press +/– PROGRAM/TRACK/INDEX to select the track to be monitored. The red "▶" indicates the selected track.
  Only the track marked with red bar on the right side has certain recorded signals. Recordings are not made on the tracks without this indication.

**To stop playing back**

Press ■ STOP.

**To stop the tape for a moment**

Press II/▶◀ PAUSE/STILL.

**Notes**

- When DIGITAL MULTI PLAY is set to MULTI, all bars light up even if nothing has been recorded on the tracks.
- While playback, we recommend that you set REC LEVEL to the "0" position. If not noise which appears when you stop the tape, may damage the speakers.

## 1-8. INDEX FUNCTION

H-1

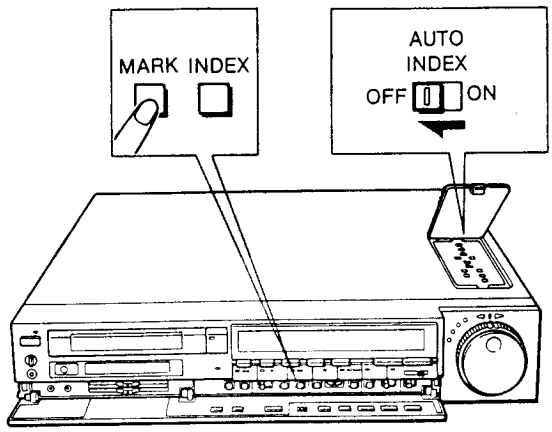


H-2

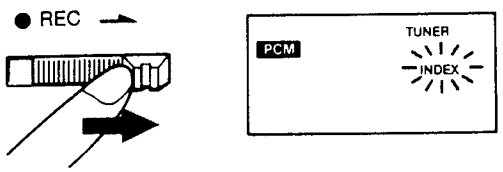


H-3

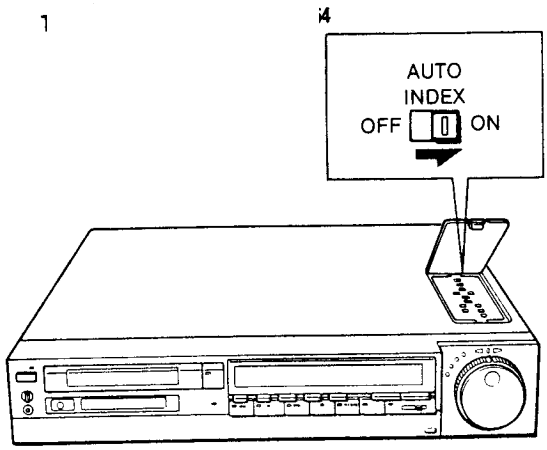


H-4

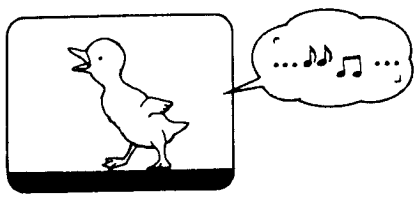

The desired programme can be easily located by the index signal marked on the tape.
This function is effective either to normal video-audio recorded tapes and to digital multi audio recorded tapes.

### TO MARK INDEX SIGNALS

**Index signals can be marked at any desired point on the tape during recording, timer recording or normal playback.**

H-1

1 Set AUTO INDEX in the upper compartment to OFF.
2 Press INDEX MARK at the point where an index signal is to be marked.
The "INDEX" indication blinks while the index signal is being marked.

**An index signal is automatically marked on the tape when ● REC is slid to the right or when a timer recording starts.** H-2

The "INDEX" indication blinks in the window while the index signal is being marked.

**Notes**

- Index signals will not be marked on the tape when the recording is started by releasing the recording pause mode.
- The index function operates also with the index signals marked using the index function (same format) of other recorders.

### TO MARK INDEX SIGNALS AUTOMATICALLY IN DIGITAL MULTI AUDIO RECORDING H-3

Set AUTO INDEX in the upper compartment to ON.
The VTR searches for the blank spaces (of approx. 3 seconds) between programmes (musics etc.), and marks index signals.
The "INDEX" indication blinks while the index signal is being marked.

**Notes**

- The sound will decrease and be kept at this volume while the index signal is being marked in the playback mode. In addition, a black bar noise will appear at the bottom of the playback picture during marking H-4 However, the recorded signals are not affected.
- During playback, index signals can be marked on cassette tapes whose safety tab is slid out (including commercially available prerecorded video tapes).
- An index signal may not be registered immediately before a point on the tape where the recording tape speed changes.
- You cannot mark nor erase index signals if no video/audio signals is recorded on the PCM track of the tape.

- Between each index signal, there must be a minimum space of 2 minutes for LP mode and 1 minute for SP mode.
  If index signals are marked at shorter intervals, index scan or search functions may not be operated correctly.
- For tapes that index signals are marked automatically, index scan or search may not be made correctly because of the quality of the audio source.
  In this case, set AUTO INDEX to OFF and mark index signals manually.
- Index marking and erasing cannot be made during tape editing. (When the EDIT lamp is lit.)

H-5

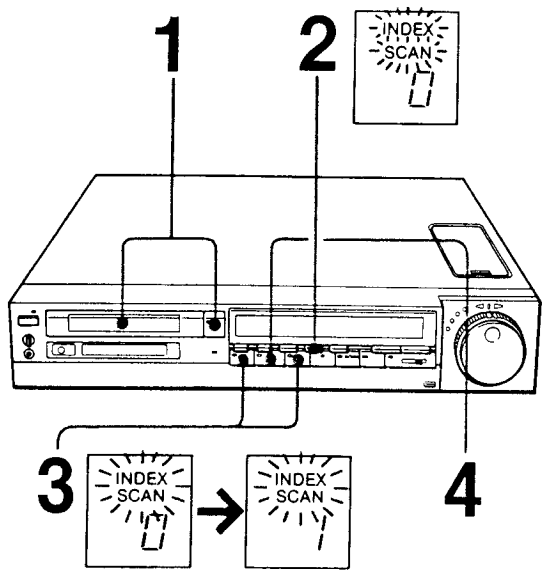


## INDEX SCAN

**— To play back the beginning of each programme in sequence** H-5

**Before operating**

Set PCM MODE to NORM, or P (or S).
If you have set to P (or S), select the digital multi audio track.

1 Insert a cassette that has index signals recorded.
2 Press INDEX once.
  The "INDEX" and "SCAN" indications blink alternately.
3 To scan the previous programmes, press ◀◀ REW.
  To scan the programmes ahead, press ▶▶ FF.
  The tape will be rewound or rapidly advanced to the next index signal marked.
  While scanning, the "INDEX" and "SCAN" indicators blink, simultaneously. The tape will be played back for approximately 10 seconds, and then, rewound or advanced to the next index signal.
  Everytime an index signal is deteced and playback begins, the displayed index number increases.
4 At the desired programme, press ▶ PLAY.
  Normal playback of that programme will begin.

H-6

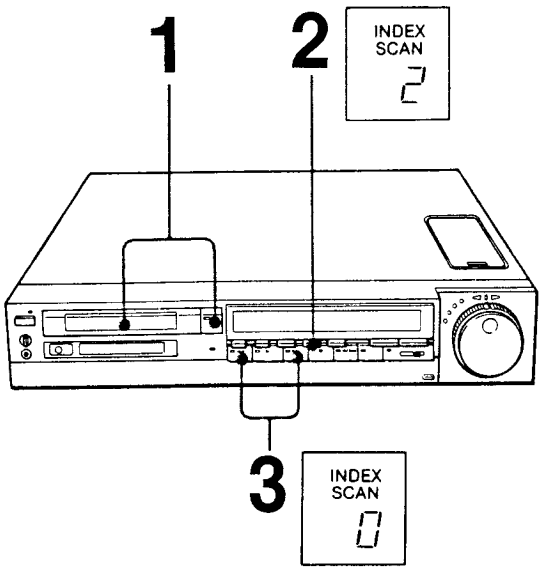


H-7

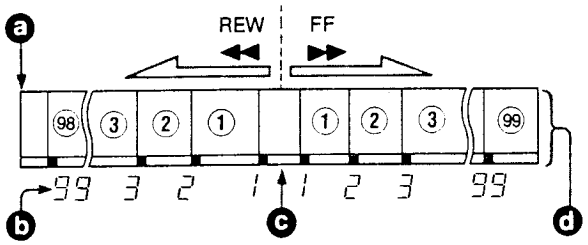


## INDEX SEARCH H-6

**— To locate the desired programme**

You can locate the desired programme and play it back automatically by designating the number of its index signal. Up to 99th index signal from the present position on the tape can be located.

**Before operating**

Set PCM MODE to NORM or P (or S).
If you have set to P (or S), select the digital multi audio track.

1 Insert a cassette that has index signals marked.
2 Press INDEX several times until the index number of the desired programme is displayed.
For instance, to locate the second programme ahead, two index signals should be detected, so press INDEX until "2" is displayed. On the other hand, to locate the second programme behind, three signals, should be detected, so press the button until "3" is displayed.

H-7
- ⓐ Beginning of the programme
- ⓑ Index number
- ⓒ Present position
- ⓓ Video tape (or one of the 6 digital multi audio tracks)

**Notes**

- To designate higher index number, first press INDEX several times, then continue with +/– PROGRAM/TRACK/INDEX or JOG so that the desired index number display appears.
- If you enter an incorrect index number, press ■ STOP to reset the display.

3 To locate a previous programme on the tape, press ◀◀ REW.
To locate a programme ahead, press ▶▶ FF.

The tape will be rewound or rapidly advanced. Every time an index signal is detected, the displayed number will decrease. When the number reaches 0, playback of your desired programme will begin.

**Notes**

- If, on a tape, there are portions on which index signals are marked on the first PCM audio track in the digital multi audio mode, and portions on which index signals are marked in the normal mode, the index scan and search in the normal mode cannot be made correctly.
- For index scan or search in digital multi audio mode, set AUDIO MONITOR to PCM or MIX.
- Index scan and search can be activated during playback mode. (In the mode which was being selected when the playback started.)
- While the index signals are being scanned or located, nothing is displayed on the monitor and sound is cut off.
- If the tape is rewound to the beginning during index scan or index search, playback will begin automatically.
- If the tape reaches the end during index scan or index search, the tape will not be rewound automatically.

H-8

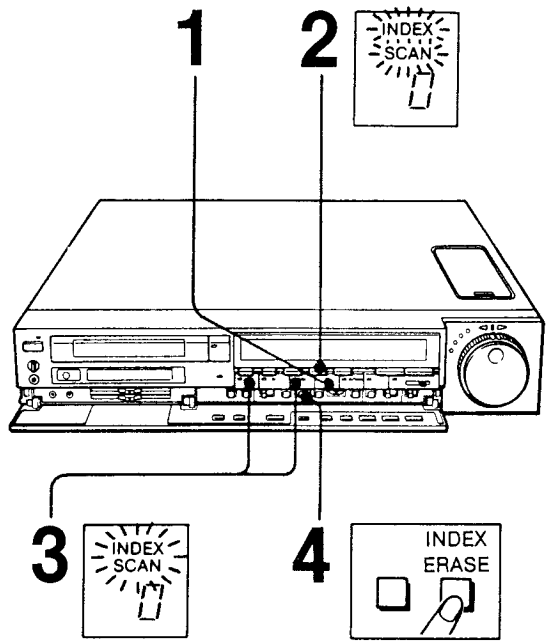


H-9

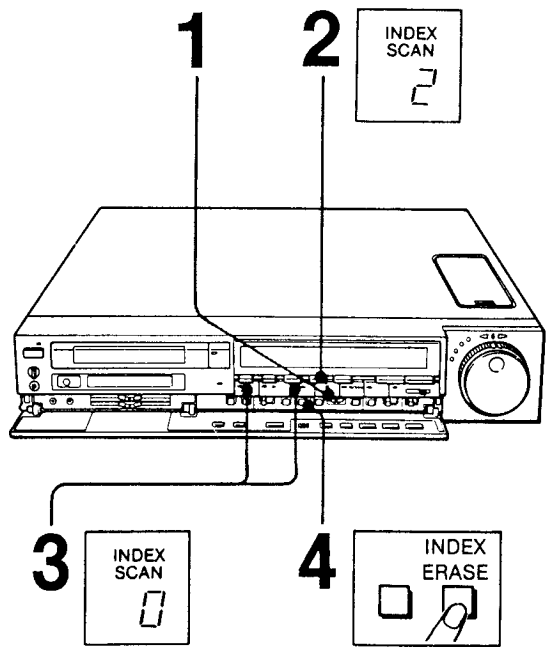


**When the desired programme cannot be played back with the index function, check the following:**

- The nearest index signal may not have been counted. If the point where you pressed ◀◀ REW or ▶▶ FF is fairly close within 2 minutes of the normal tape-run to the nearest index signal, that signal will not be counted.
- Is there a space of more than 2 minutes between two index signals?
  If there is more than one index signal marked within an interval of 2 minutes of the normal tape-run, the mechanism may not function properly.

## TO ERASE INDEX SIGNALS H-8

**Before operating**

Set PCM MODE to NORM or P (or S).
If you have set to P (or S), select the digital multi audio track.

**Erasing while index scanning — To erase the index signals in sequence**

1 Stop the tape with ■ STOP.
2 Press INDEX once.
3 Press ◀◀ REW or ▶▶ FF.
  The tape will be rewound or rapidly advanced to the next index signal and playback will begin.
4 Within approx. 10 seconds, while the tape is being played back, press INDEX ERASE.
  The "INDEX" indication blinks and the "SCAN" indication lights steadily while the index signal's erasure.

After the erasure, index scan will resume. At each index signal located, press INDEX ERASE.
To stop index scanning, press ■ STOP.

**Notes**

- Press INDEX ERASE more than 2 seconds after the playback starts.
- The index signals recorded immediately after an unrecorded portion on a tape, or on a portion where the recording tape speed has been changed or two recordings have been made continuously will not be erased.
  During index erasing, a black bar noise will appear at the bottom of the playback picture.

**Erasing while index searching — To erase a particular index signal** H-9

1 Stop the tape with ■ STOP.
2 Press INDEX button several times until the number of the index signal to be erased is displyed.
3 Press ◀◀ REW or ▶▶ FF.
4 Within approx. 10 seconds, while the tape is being played back, press INDEX ERASE.
  The "INDEX" indication blinks while the index signal is being erased.

After the erasure, the unit returns to the normal playback.

## 1-9. TIMER-ACTIVATED RECORDING

I-1

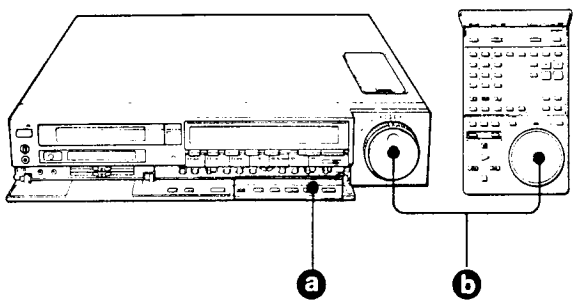


I-2

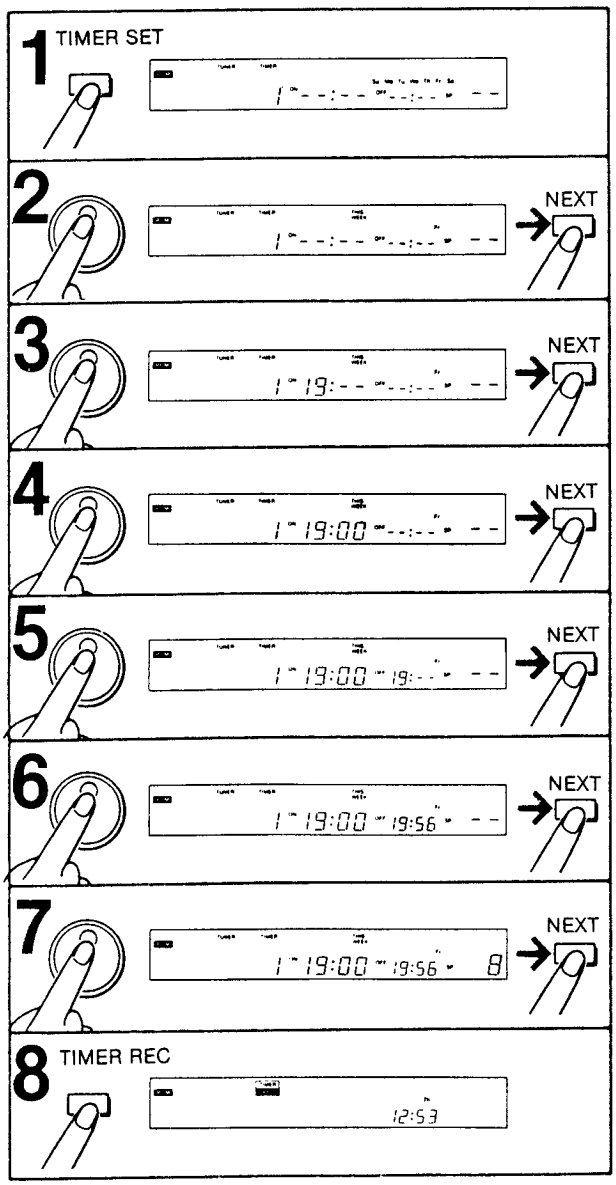


Six recordings can be preset to be made between today and Saturday of the week after next.

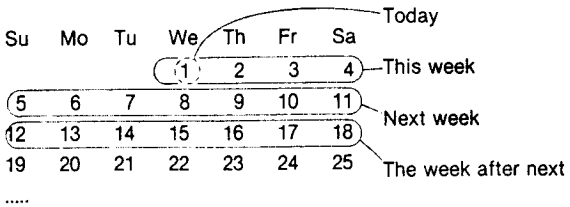


**Before setting the timer**

- The clock must be set correctly.
  For the setting, see page 16.
- Make sure the cassette tape is long enough to record all the programmes.
- Be sure the safety tab of the cassette has not been slid out.
- Set the selectors as in "Before recording" on page 18.

I-1

**Buttons for timer setting**

You can use the buttons and JOG dial on the recorder.

**a NEXT button**
Every time you press the NEXT button, the item to be set will blink.

**b JOG dial**
To set the week and day, the turn-on and turn-off times and the channel, turn clockwise to advance and anticlockwise to reverse.

**Operation** I-2

Suppose you want to make a recording of channel 8 from 7:00 PM to 7:56 PM Friday.

1 Press TIMER SET.
2 Set the week and day with JOG.
  Then, press NEXT.
3 Set the turn-on hour with JOG.
  Press NEXT.
4 Set the minute with JOG.
  Press NEXT.
5 Set the turn-off hour with JOG.
  Press NEXT.
6 Set the minute with JOG.
  Press NEXT.
7 Set the TV programme number to be recorded with JOG.
  Press NEXT.
  To preset other programmes, repeat steps 1 to 7.
8 Press TIMER REC.

The power will be turned off and the recorder will enter the standby mode. (The current time is displayed.)

Recording will start at the preset time and will automatically stop when the recording is completed.
The memory of the timer programme will be erased if it is for only one day and the timer programme numbers will advance one by one.

**Notes**

- Once the TIMER REC indicator has been displayed, only the functions of CHECK and TIMER REC can be activated. For the usual manual operations, press TIMER REC again so that the indicator goes off, and then, turn on the power.
- Timer recordings of the signals from the AUDIO IN jacks, in the digital multi audio mode can also be made. See page 27.

**If you select an incorrect digit for the turn-on/off time setting,** press CLEAR. The programme which is currently being set will be cancelled but the other programmes previously set will remain.

**To set the week and day**

The week and day indications change in the direction of the arrow, starting from today, when you turn JOG clockwise; and in the reverse direction when you turn JOG anticlockwise.

| The day(s) you want the recording(s) made | Display |
|---|---|
| At the same time every day | Su Mo Tu We Th Fr Sa |
| Only one day | THIS WEEK<br>We (Today) → Th →···→ Sa<br>NEXT WEEK<br>Su →···→ Sa<br>WEEK AFTER NEXT<br>Su →···→ Sa |
| At the same time on the same day every week | EVERY WEEK<br>Su →···→ Fr → Sa |
| At the same time every day from Monday to Friday | Mo Tu We Th Fr |
| At the same time every day from Monday to Saturday | Mo Tu We Th Fr Sa |

## BEFORE THE TIMER-ACTIVATED RECORDING STARTS

**To check the timer settings**

Press CHECK.

Every time you press CHECK, each programme will be displayed in the window.

**To change the settings**

1 Press TIMER REC. The TIMER REC indicator goes off.
2 Press CHECK to select the programme to be changed.
3 Press TIMER SET.
4 Press NEXT until the item to be changed blinks.
5 Change the setting with JOG.
6 Press NEXT so that the tape counter and the current time appear in the window.
7 Press TIMER REC again to reactivate the timer.

**To erase the memory of a particular programme**

1 Press TIMER REC. The TIMER REC indicator goes off.
2 Press CHECK to select the programme to be erased.
3 Press CLEAR. The memory of the programme will be eliminated.
4 If other programmes have been preset for recording, press TIMER REC again to reactivate the timer.

## DURING RECORDING

**To stop the timer recording**

Press TIMER REC. The recording will stop and the power will be turned off.

**When the tape ends during timer recording**

The tape stops but the tape will not be rewound.

The ■ STOP and ❚❚/▶|◀ PAUSE/STILL buttons do not function during a timer recording.

## NOTES ON TIMER-ACTIVATED RECORDINGS

**Troubles when TIMER REC is pressed**

The cassette will be ejected automatically →
- The cassette inserted has the safety tab slid out.
- No cassette is inserted.
- The tape is at its end

The "TIMER-REC" indicator disappears →
- The turn-on time has been set before the current time.

I-3

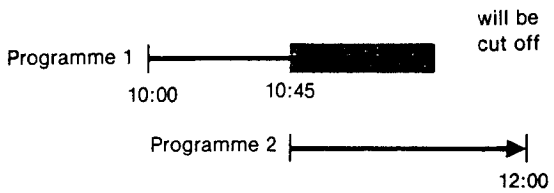


**When the presettings of your timer-activated recordings overlap** I-3

The recording of programme 2 will begin before the programme 1 is finished.
In the illust.: (The coloured portion will not be recorded.)

I-4

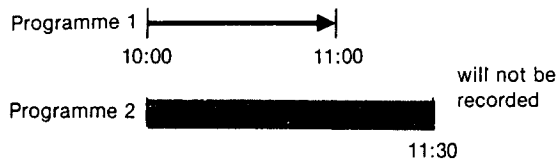


**If the turn-on time of two programmes are the same** I-4

The recording of the programme having the lower programme number will be made. The memory of the programme having the higher number will be cleared.
In the illust.: (The coloured portion will not be recorded.)

**If the turn-on time of one programme is the same as the turn-off time of another programme**

When a timer recording starts, the unit is set to recording pause mode 6 seconds before the preset turn-on time. The pause mode is released exactly at the preset turn-on time and recording starts approximately 1 second later. Therefore, the end of the first programme will not be recorded for 6 seconds. Both recordings, however, will not be made smoothly.

**If a power interruption occurs before a timer recording**

The clock will stop and "Su 0:00" will light up. This means that the memory of the timer programmes has been completely erased. Reset the clock and timer programmes.

A short power interruption of less than approximately 20 seconds will not affect the memory. The clock will show the correct time and the timer programmes will be performed.

**If the power was interrupted during a timer recording**

Recording will stop and the power will be turned off. If the interruption was less than approximately 20 seconds, the recording will resume.

## 1-10. ABOUT THE VPS SWITCH

I-5

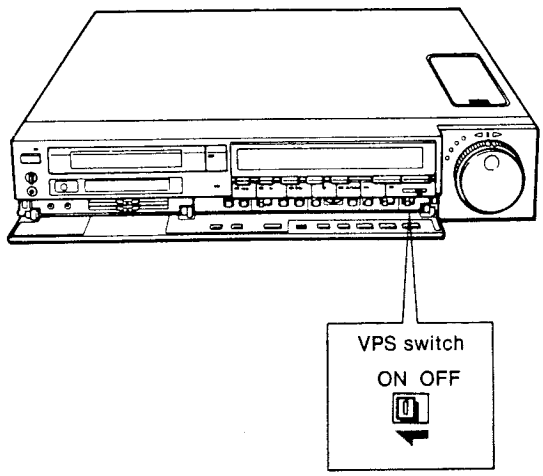


— EV-S850PS only I-5

To avoid missing a timer-activated recording because of a delay in the transmission sequence or a change in the programme schedule, the West German broadcasting stations have agreed to transmit a special code, called the VPS (Video Program System) code, together with the TV programme. The EV-S850PS is equipped with a VPS switch which allows you to preset recording times and insures that your programmes will be recorded regardless of delays.

1 **Set the VPS switch to ON.**
The VPS indication appears in the display window.
2 **Set the timer to the time listed in the VPS programme guide which corresponds to the programme you want to record.**

The unit will be turned on 10 minutes before the preset time, but recording will start when the preset programme begins.

**Notes**

- If the station you want to record fails to transmit the VPS code signal with the programme, or the VPS code cannot be detected for some reason, recording will begin at the time you preset.
- Be sure to set the timer according to the VPS programme guide, otherwise programme will not be recorded.
- Even if the preset programme does not begin, the unit will remain prepared for recording until 4:00 AM of next day. Or the unit will be prepared to record for 23 hours 50 minutes when the preset time is between 0:00 AM to 4:00 AM.
- When the unit receives a VPS programme interruption code during recording (for example, when urgent news is inserted), it will stop recording. As soon as the interrupted programme resumes, recording will continue.

**Multi-programme and multi-channel recording**
The VPS function allows you to record several successive programmes.
Occasionally, these programmes may overlap or conflict with one another. In these cases the following rules apply.

- If you are recording two successive programmes, on the same channel and the first is delayed past the starting time of the second, the first setting is cancelled and the second programme is recorded.
- If you are recording two successive programmes, each on a different channel, and the first is delayed past the starting time of the second, the first will be cancelled, and the VPS function will not be activated for the second programme and the second programme will be recorded beginning at the preset time even if the second programme is delayed.
- If the first programme is delayed so that it is not finished before the second is scheduled to begin, the unit will automatically switch to the second programme at the preset time and the second programme will be recorded.

## 1-11. USE OF THE SLEEP TIMER

I-6

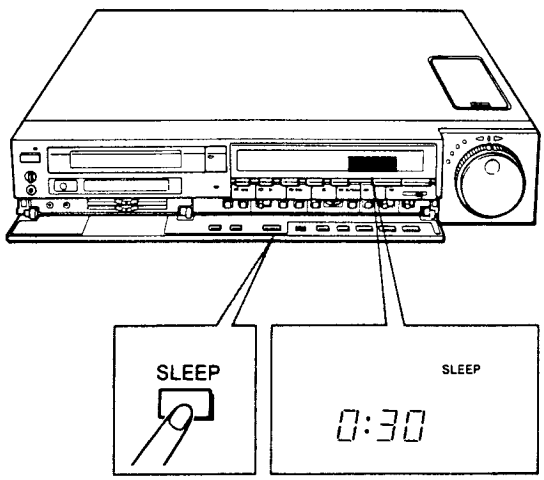


**— To preset the turn-off time of the unit** I-6

When recording or playback is being made, preset the turn-off time of the unit.
The recording or playback duration can be set for up to 5 hours by 30 minutes.

**Press SLEEP.**
Every time you press on SLEEP, the recording/playback duration indication changes as follows:

0:30 → 1:00 → 1:30 → 2:00 →···→ 5:00 → Current time display

30 min. One hr. One and a half hr. 2 hrs. 5 hrs. Zero hr.

The duration decreases minute by minute as the recording or playback advances. The power will be turned off automatically about 30 seconds after the duration time has elaseped.

## ADVANCED EDITING

If another Sony VTR with intercomponent control terminals are used with this unit, use of the supplied Remote Commander brings you much more convenience in editing operations.

You can operate separately the two units (player and recorder) by the supplied Commander.
In addition, once you have set them in tape editing standby mode, you can start and stop playback/recording simultaneously with both units simply by pressing the SYNCHRO EDIT button on the Commander. (= SYNCHRO-EDITING)

**Synchro-editing**
With this function, playback start/stop of one VTR can be activated in synchronization with recording start/stop of the other VTR.
This function is efficient, for example, when you want to reproduce only the particular portions of a tape onto another tape, or to insert the selected scenes from an original tape onto a pre-recorded tape, etc.

Two methods of synchro-editing are available:

**When this unit is used as a player** J-1
"Assemble editing" can be made.
On this unit, designate the desired scenes of the original tape.
These scenes can be "assembled" (= recorded) onto the other tape of another VTR.

**When this unit is used as a recorder** J-2
"Automatic insert editing" can be made.
On this unit, locate a portion of the tape on which any scenes from other original tape must be "inserted".

**Notes**

- Do not use simultaneously the above "synchro-editing" and the insert recording function of the VTR (ex. CCD-V8 series) which is used with this unit.
- If the VTR to be used with this unit is equipped with the CONTROL L connector and the CONTROL S IN jack, make the connection to the CONTROL S IN jack. If the CONTROL L connector is used, the editing may not be made correctly.

J-1

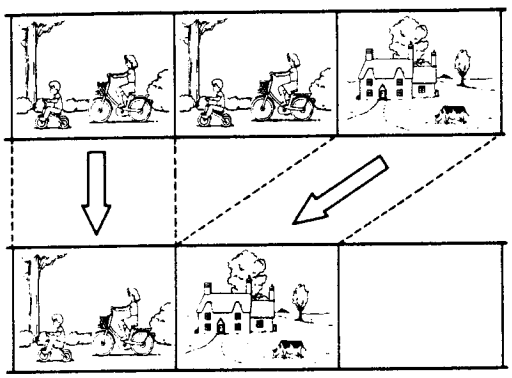

J-2

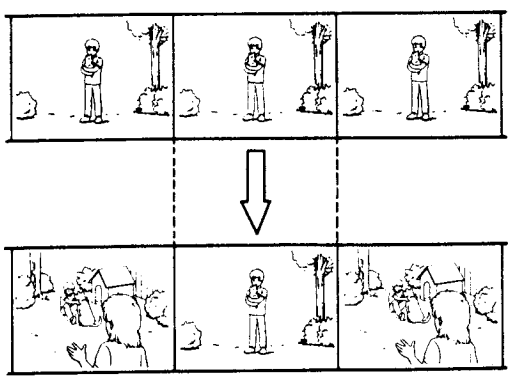

J-3

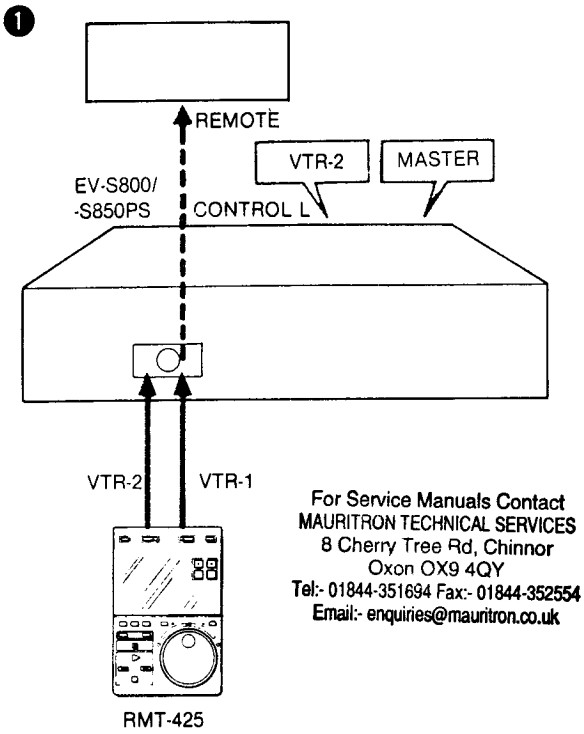


For Service Manuals Contact
MAURITRON TECHNICAL SERVICES
8 Cherry Tree Rd, Chinnor
Oxon OX9 4QY
Tel:- 01844-351694 Fax:- 01844-352554
Email:- enquiries@mauritron.co.uk

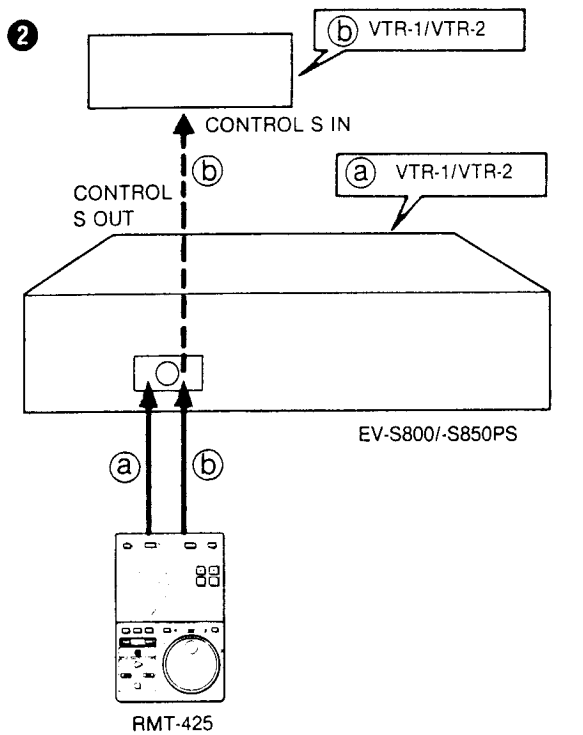


**How are the control signals transmitted?** J-3

— About MASTER/SLAVE and COMMAND MODE selectors on this unit —

**❶ When the connection is made to the CONTROL L jack of this unit**

- **MASTER/SLAVE selector**
  Set to MASTER.

  If this unit is controlled by another equipment (ex: RM-E100V), set to SLAVE.

- **COMMAND MODE selector**
  Set to VTR-2.

Set as above, commands emitted by the Remote Commander in the VTR-2 mode control only this unit and commands in the VTR-1 mode are transmitted to the other VTR through this unit.

**❷ When the connection is made to the CONTROL S OUT jack of this unit**

- **COMMAND MODE selector**
  Set to VTR-1 or VTR-2 so that the command mode of this unit is different than the other VTR's command mode.

- **MASTER/SLAVE selector**
  Set to either position. This selector has no effect in this connection.

Set as above, commands emitted by the Remote Commander in a command mode are effective only to one unit and commands in the other command mode control only the other unit.

In both cases (❶ and ❷), point the Commander to the remote sensor of this unit and switch the command mode selector on the Commander to VTR 1 or VTR 2 each time you want to control the player or the recorder in editing operations.

J-4

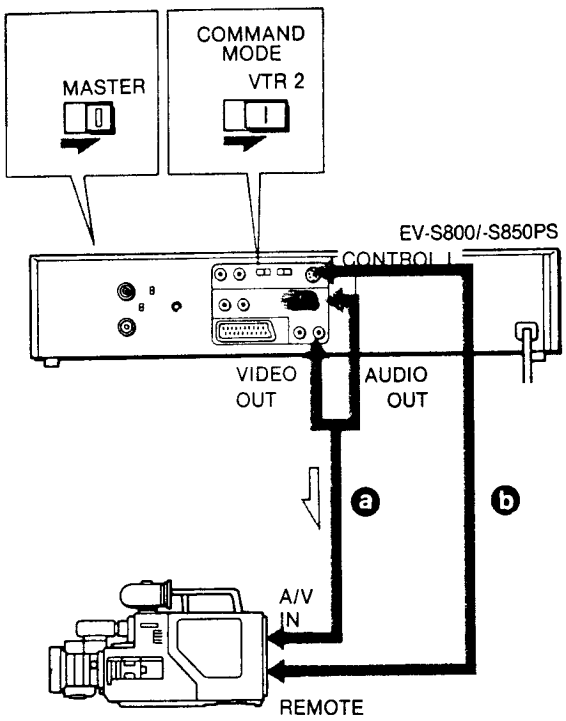


**Editing tapes from this unit to the 8 mm video camera/ cassette recorder having a 5-pin REMOTE connector**
— Assemble editing —

**Connection**

J-4

Connect the CONTROL L connector of this unit to the REMOTE connector of the video camera/cassette recorder. For audio/video connection, see the illustration.

**Before operating**
**On this unit,**
set the switches as follows:
- MASTER/SLAVE on the rear panel to MASTER.
- COMMAND MODE in the upper compartment to VTR 2.
- AUDIO MONITOR in the front panel to the appropriate position. (See page 21.)

**On another VTR**
Set to the LINE IN mode.

**Operation**

| Set the Commander's command mode selector to | | Operation |
|---|---|---|
| 1 | VTR 1 | 1 Play back the tape and decide the starting point of the recording.<br>2 Set to the recording pause mode. |
| 2 | VTR 2 | 1 Play back the tape and decide the ending point of the recording.<br>2 Press COUNTER RESET to display "0000" in the window.<br>3 Rewind the tape and decide the starting point of the recording.<br>4 Set to the playback pause mode.<br>5 Press SYNCHRO EDIT. Playback and recording start simultaneously. When the counter reaches "0000" point, editing stops automatically and each unit enters the playback or recording pause mode. Repeat steps 1 to 5. |

**For accurate setting of the starting/ending point,** use JOG/ SHUTTLE.
**To stop the on-going editing operation,** press SYNCHRO EDIT or STOP with Commander's command mode selector set to VTR 2.

**Note**

During synchro-editing, you can set this unit to various speed playback modes.
(ex: slow-motion, frame-by-frame pictures etc. can be recorded.)

J-5

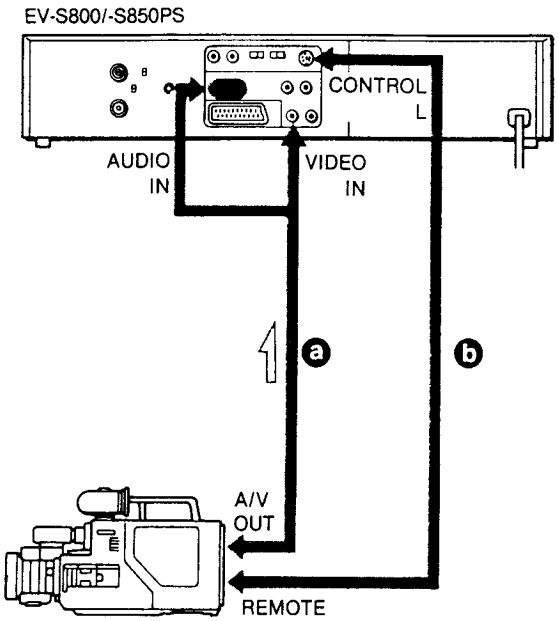


**Editing tapes from the 8 mm video camera/cassette recorder having a 5-pin REMOTE connector to this unit**
— Automatic insert editing —

**Connection**

J-5

Connect the CONTROL L connector of this unit to the REMOTE connector of the video camera/cassette recorder. For audio/video connection, see the illustration.

**Before operating**
**On this unit**
Set the switches as follows:
- MASTER/SLAVE on the rear panel to MASTER.
- COMMAND MODE in the upper compartment to VTR 2.

Press INPUT SELECT to display LINE in the window.

**Operation**

| Set the Commander's command mode selector to | Operation |
|---|---|
| 1 VTR 1 | 1 Play back the tape and decide the starting point of the recording.<br>2 Set in the playback pause mode. |
| 2 VTR 2 | 1 Play back the tape and decide the ending point of the recording.<br>2 Press COUNTER RESET to display "0000" in the window.<br>3 Rewind the tape and decide the starting point of the recording.<br>4 Set to the recording pause mode.<br>5 Press SYNCHRO EDIT. Playback and recording start simultaneously. When the counter reaches the "0000" point, editing stops automatically and each unit enters the playback or recording pause mode. |

**For accurate setting of the starting/ending point,** use JOG/SHUTTLE.
**To stop the on-going editing operation,** press SYNCHRO EDIT or STOP with Commander's command mode selector set to VTR 2.

J-6

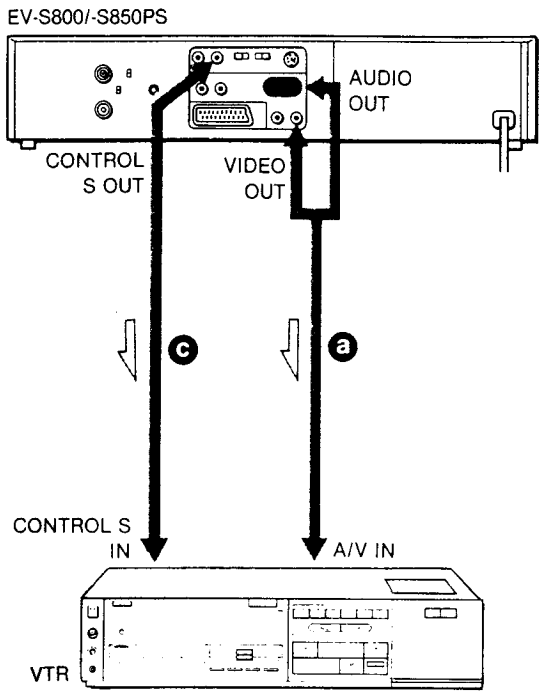


**Editing tapes from this unit to a Betamax or 8 mm VTR having a CONTROL S IN jack** — Assemble editing —

**Connection**

J-6

Connect the CONTROL S OUT jack of this unit to the CONTROL S IN jack of another VTR.
For audio/video connection, see the illustration.

**Before operating**
**On this unit**
Set the switches as follows:
- COMMAND MODE in the upper compartment to VTR 1 or VTR 2 according to another VTR's type.
- AUDIO MONITOR in the front panel to the appropriate position. (See page 21 "To select the monitor sound".)

**On another VTR**
Set to the LINE IN mode.

**Operation**
Operation is similar to that is described in "Assemble editing" on page 45. However, note that Commander's command mode selector should be set to the same command mode than that of the VTR to be controlled.

J-7

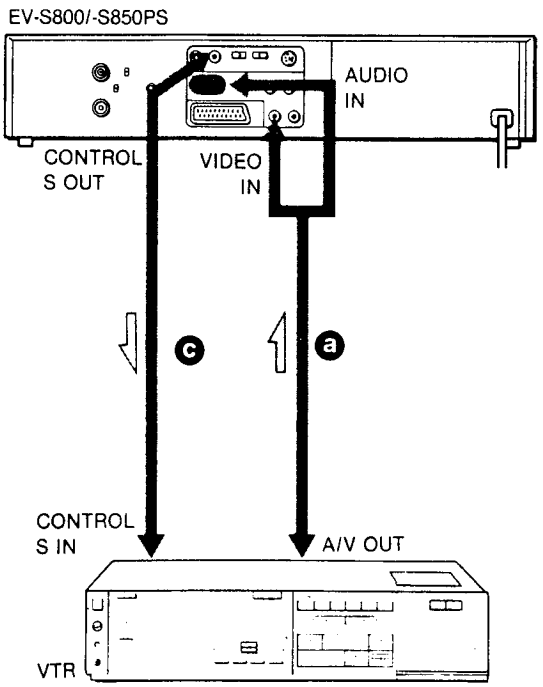


**Editing tapes from a Betamax or 8 mm VTR having a CONTROL S IN jack to this unit** — Automatic insert editing —

**Connection**

J-7

Connect the CONTROL S OUT jack of this unit to the CONTROL S IN jack of another VTR.
For audio/video connection, see the illustration.

J-8

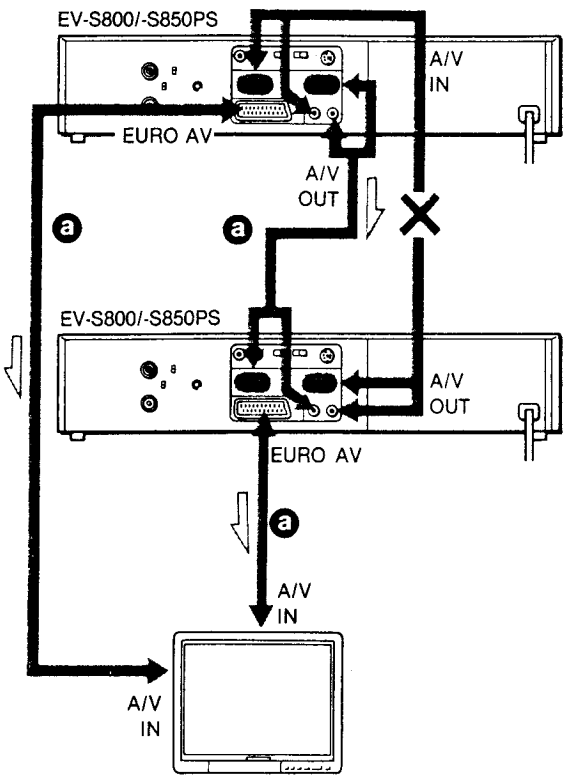


**Before operating**

- Set COMMAND MODE in the upper compartment to VTR 1 or VTR 2 according to another VTR's type. (See page 21 "To select the monitor sound".)
- Press INPUT SELECT to display LINE in the display window.

**Operation**

Operation is similar to that is described in "Automatic insert editing" on page 38. However, note that Commander's command mode selector should be set to the same command mode than that of the VTR to be controlled.

**Caution** J-8

Do not make the audio/video in and out connections simultaneously between two VTRs.

**Editing tapes from this unit to certain VTRs by using the RM-E100V editing controller** J-9

Connect the RM-E100V between the video camera recorder and this unit. With this controller, you will be able to preset the locations of the scenes you want to record (up to 8) in the controller and with a press of a button, these scenes will be recorded by this unit automatically in the order preset.
For details, refer to the instruction manual of the RM-E100V.

**Note**

Set MASTER/SLAVE selector of this unit to SLAVE. (COMMAND MODE selector can be set at any position.)

J-9

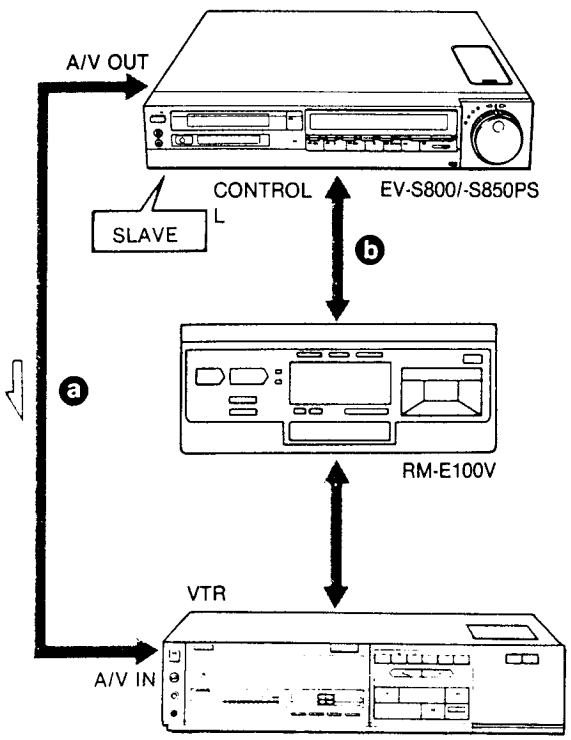

J-10

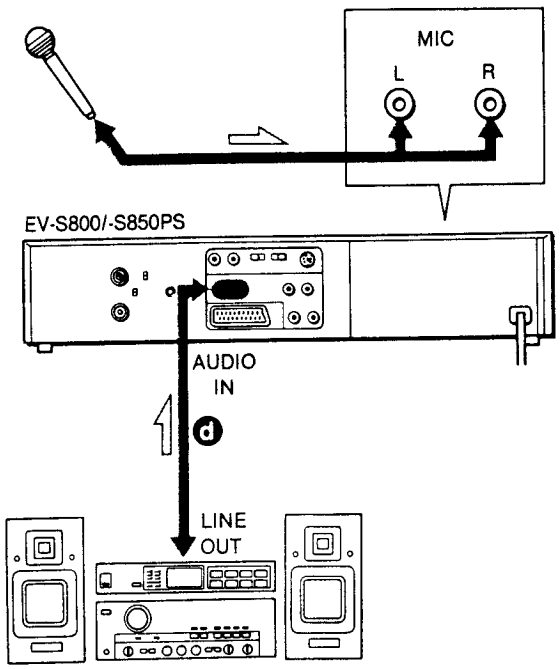


## AUDIO DUBBING

**Connection** J-10

**To dub signals from the audio system**
Connect AUDIO IN of this unit to the REC OUT jacks of the audio system.

**To dub signals from the microphones**
Connect microphone(s) to MIC L/R.

**To dub signals of TV programmes**
You can record audio signals from the built-in tuner.

Audio signals are dubbed as follows:

| Track / Microphone connected to ... | PCM track | |
|---|---|---|
| | L channel | R channel |
| L jack | Microphone sound | Microphone sound |
| R jack | | Microphone sound |
| L and R jacks | Microphone sound from the L jack | Microphone sound from the R jack |

**Operation**

1 Set PCM MODE to NORM.
2 Press INPUT SELECT and display:
  LINE to dub audio signals from the audio system and/or microphone(s).
  TUNER to dub signals of TV programmes and/or microphone(s).
3 Press ▶.
4 Decide the starting point of audio dubbing, and press ❚❚/▶|◀.
5 Press AUDIO DUB.
6 Press ❚❚/▶|◀ to release the pause mode, and at the same time start the audio source—such as talking into the microphone, playing back a tape recorder, etc.

**Notes**

- When the tape which is recorded in the SP mode is used for dubbing, the black band appears in the center and lower positions of the screen.
  When the tape which is recorded in the LP mode is used for dubbing, the black band appears in the lower position of the screen. But the recorded picture will not be affected.
- When the tape which is recorded in the different recording times is used for dubbing, noise will be heard at the point where the recording time is changed.

**For PCM recording using a PCM digital audio processor which is not based on the 8 mm PCM format**
Set SHRPNESS to the position between the top center and SHARP, and set REC MODE to SP.

# SECTION 2
# DISASSEMBLY

## 2-1. REMOVAL OF CABINET CASE

1) Remove the four screws ❶.
2) Remove the upper case ❷ in the direction shown by the arrow Ⓐ.
3) Remove the eight screws ❸.
4) Remove the bottom plate ❹ in the direction shown by the arrow Ⓑ.

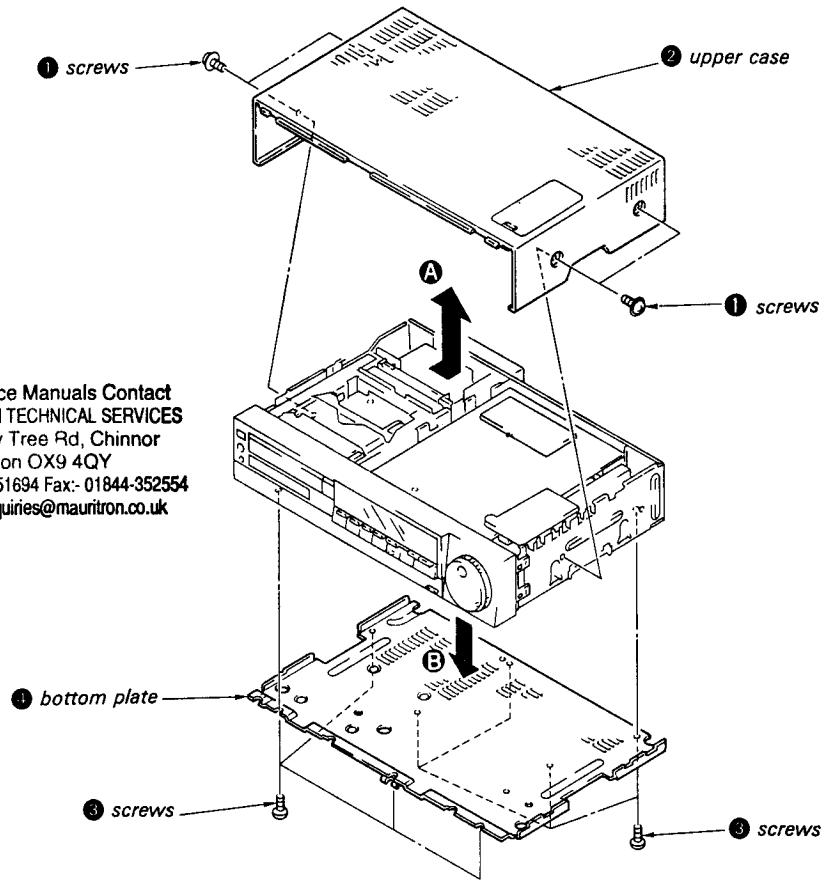


For Service Manuals Contact
MAURITRON TECHNICAL SERVICES
8 Cherry Tree Rd, Chinnor
Oxon OX9 4QY
Tel:- 01844-351694 Fax:- 01844-352554
Email:- enquiries@mauritron.co.uk

## 2-2. REMOVAL OF FRONT PANEL

1) Remove the three screws ❶.
2) Pull out the connector (CN2) ❷ and remove the control switch block ❸.
3) Remove the five claws ❹ and the notching section ❺.
4) Remove the connector ❻ and remove the front panel ❼ in the direction shown by the arrow.

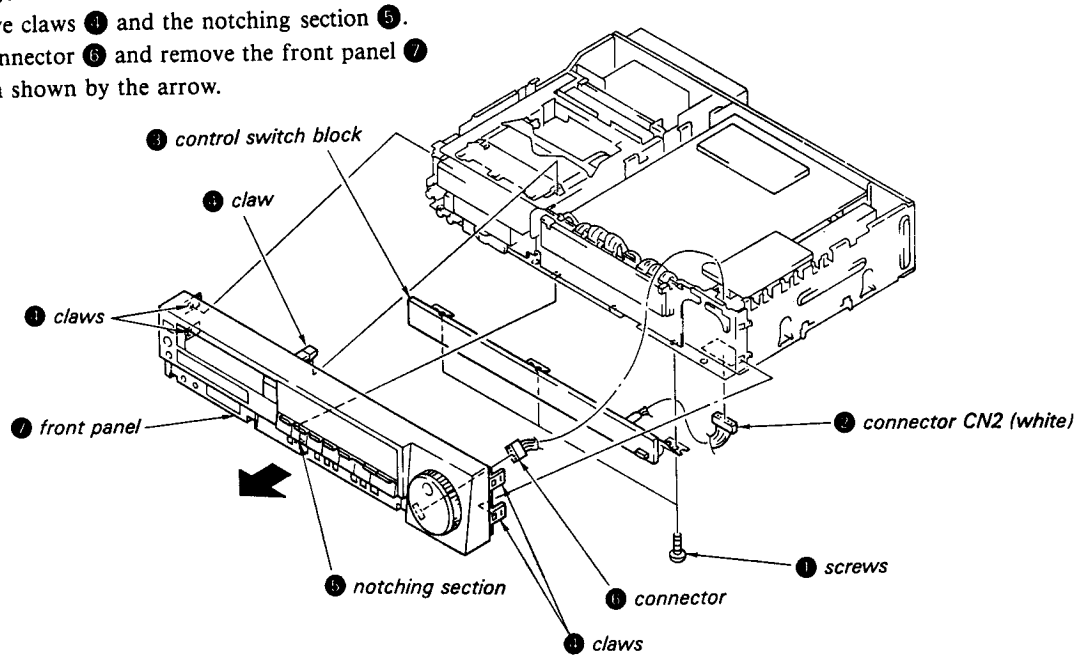

## 2-3. OPENING OF FT-13 BOARD

1) Remove the two screws ❶.
2) Remove the FT-13 board ❸ from the two notching section ❷.
3) Open the FT-13 board in the direction shown by the arrow.

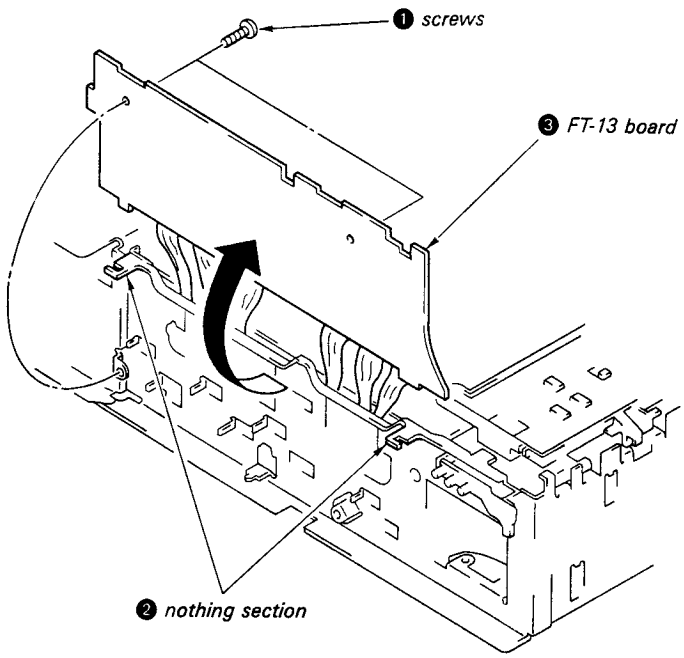


## 2-4. OPENING OF PW-30 BOARD.

1) Remove the two screws ❶.
2) Remove the PW-30 board ❸ from the notching section ❷.
3) Open the PW-30 board ❸ in the direction shown by the arrow.

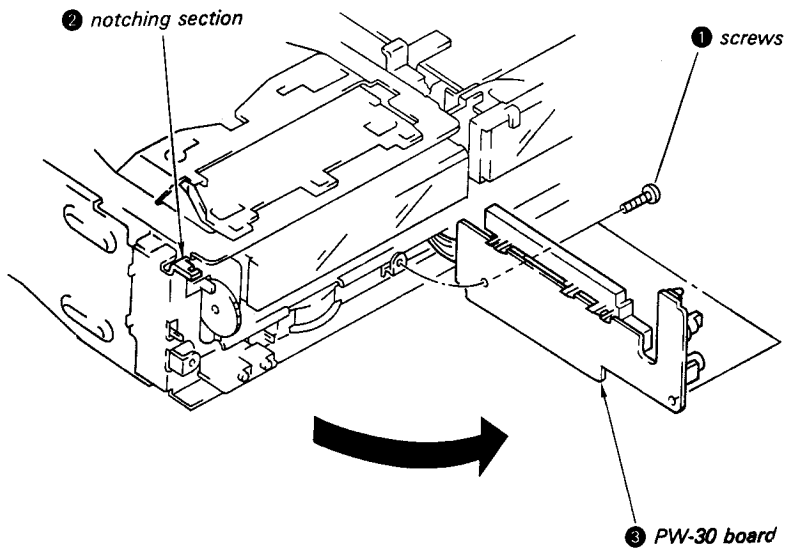

## 2-5. REMOVAL OF PR-13 BOARD

1) Remove the screw ❶.
2) Take off the four claws ❷.
3) Remove the preset (A) assembly ❸.
4) Remove the PR-13 board ❹.

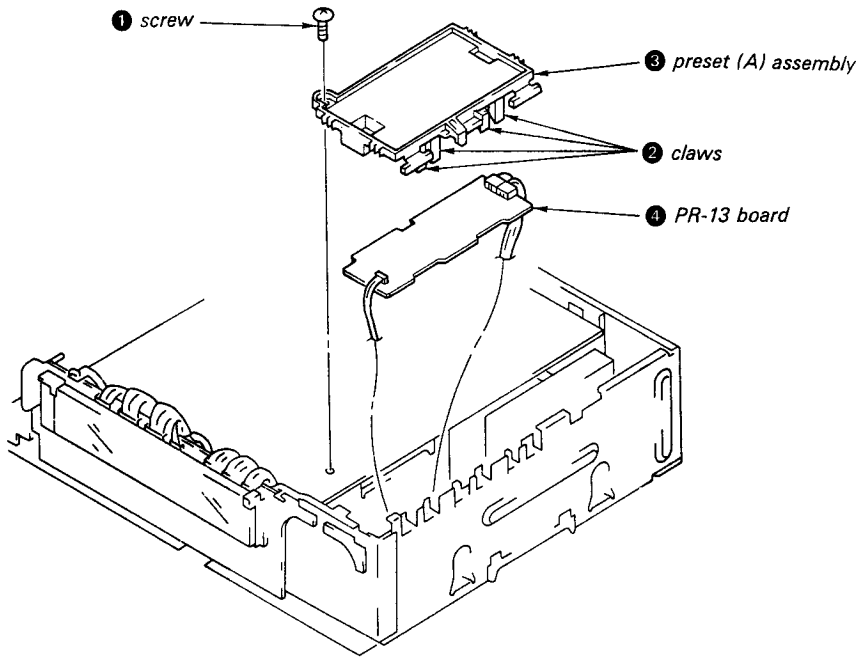


## 2-6. OPENING OF SP-2 BOARD

1) Refer to the "REMOVAL OF PR-13 BOARD", and remove the preset (A) assembly.
2) Remove the two screws ❶.
3) Remove the panel jack ❷.
4) Remove the screw ❸, and remove the SP-2 board ❹ in the direction shown by the arrow.

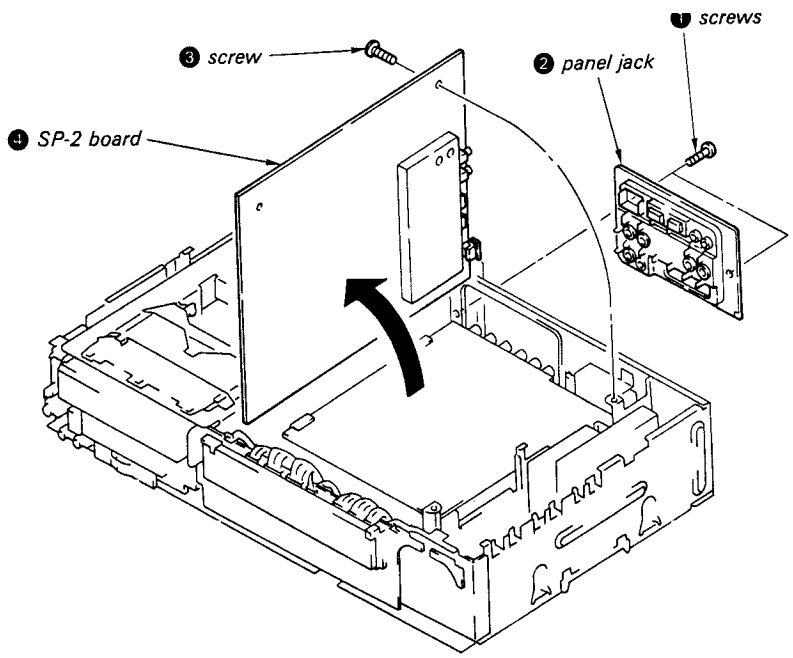

## 2-7. REMOVAL OF TS-50, TU-83 BOARD

1) Refer to "REMOVAL OF SP-2 BOARD", and open the SP-2 board.
2) Remove the two screws ❶.
3) Pull out the connector pin ❷.
4) Remove TS-50, and TU-83 board ❸ in the direction shown by the arrow Ⓐ.

**Note:** At this time, take care not to injure the board by scratching it.

5) Open the TS-50 board in the direction shown by the arrow Ⓑ.

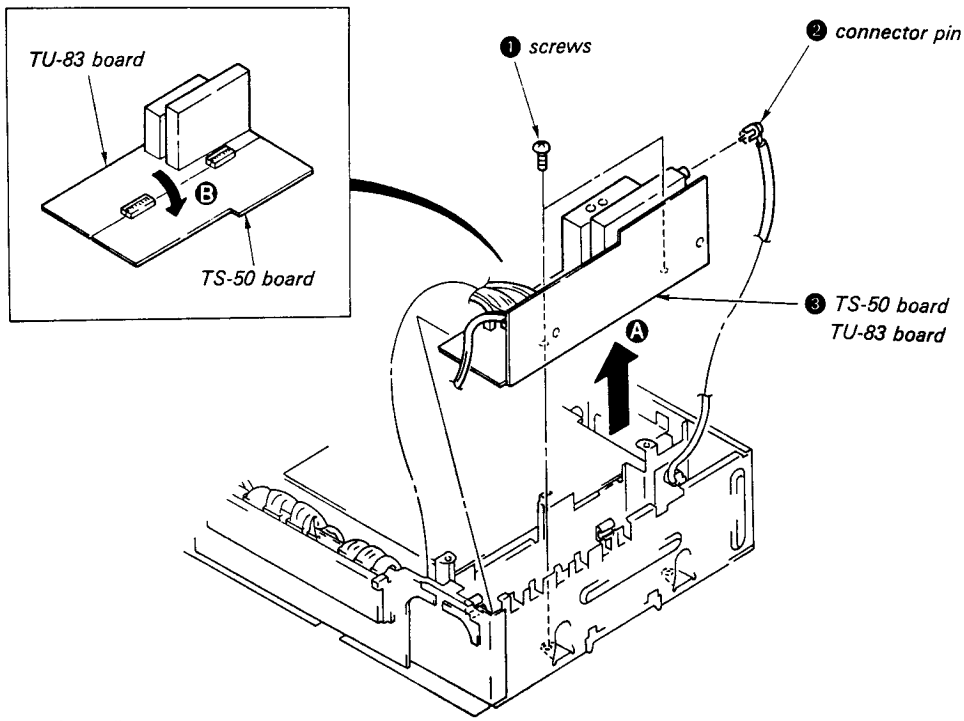


## 2-8. OPENING OF VI-20 BOARD

1) Remove the two screws ❶.
2) Remove the panel jack ❷.
3) Remove the two screws ❸.
4) Open the VI-20 board ❹ in the direction shown by the arrow.

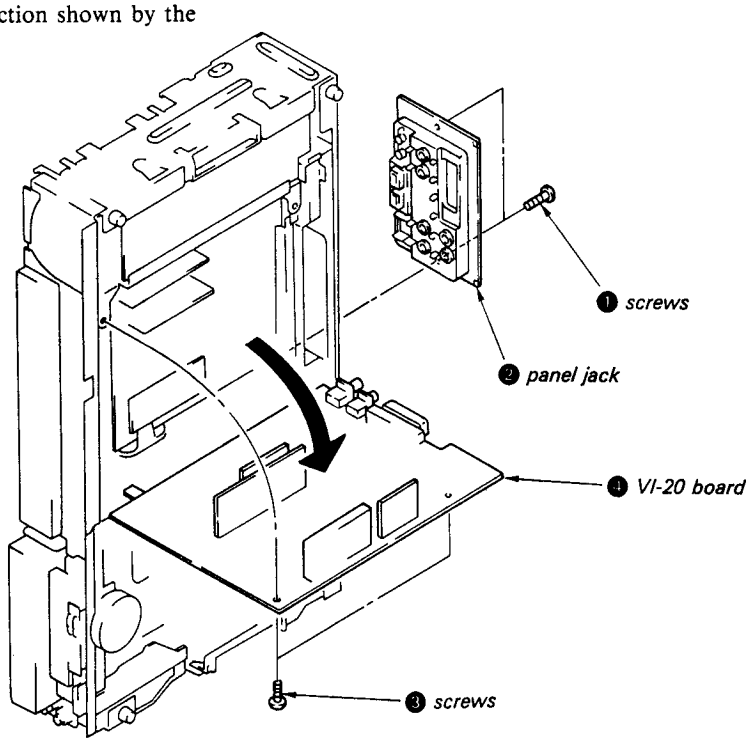

## 2-9. OPENING OF AU-22 BOARD

1) Refer to "REMOVAL OF SP-2 BOARD", and open the SP-2 board.
2) Remove the two screws ❶.
3) Open the AU-22 board ❷ in the direction shown by the arrow.

**Note:** When opening the AU-22 board, take care not to let the AU-22 board contact with the SP-2 board.

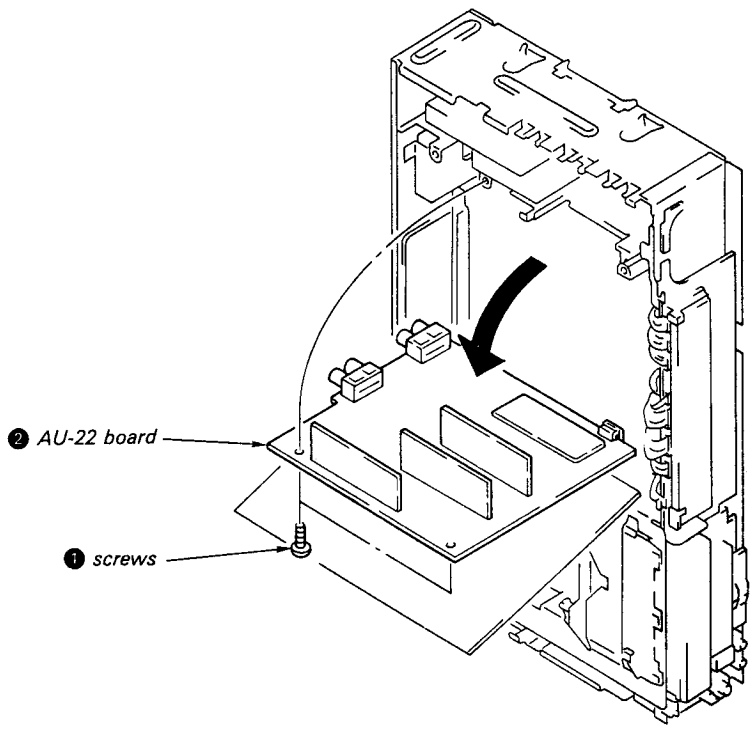


## 2-10. REMOVAL OF DT-63 BOARD

1) Pull out the connector (CN102) ❶.
2) Remove the DT-63 board ❷ from the two ditches ❸.

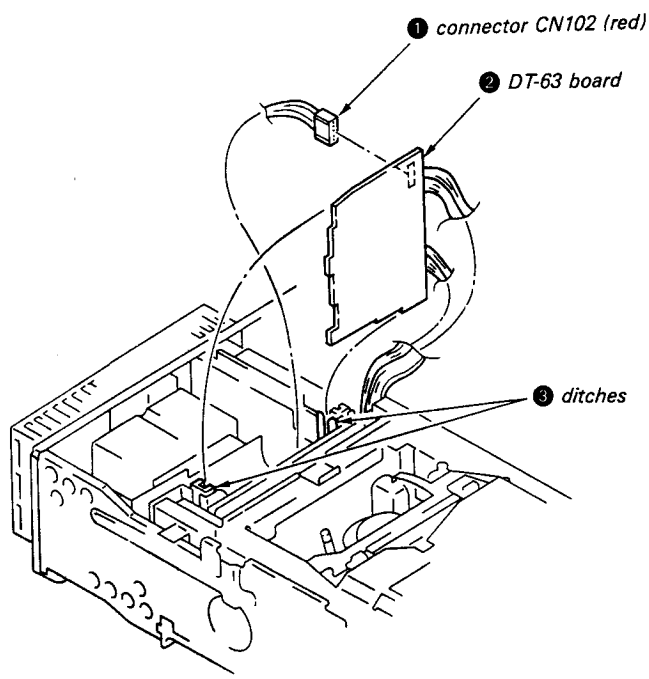

## 2-11. REMOVAL OF RP-36 BOARD

1) Refer to the "REMOVAL OF MECHANICAL BLOCK", and remove the mechanical block.
2) Remove the screw ❶.
3) Open the RP-36 board ❷ in the direction shown by the arrow.
4) Remove the shield case lid ❸ and shield case rear lid ❹.

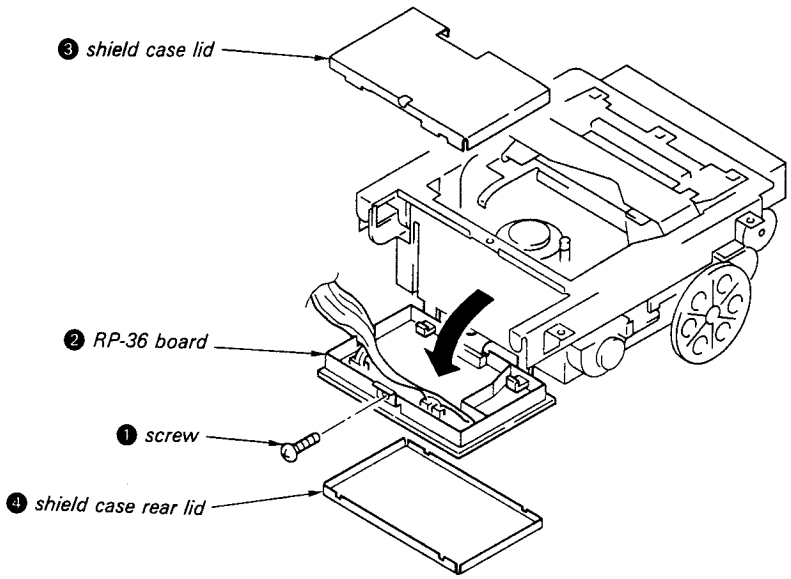


## 2-12. REMOVAL OF DR-35 BOARD

1) Remove the six screws ❶.
2) Remove the power cover Ⓐ ❷.
3) Remove the screw ❸.
4) Pull out the three connectors (CN201, CN202, CN203) ❹.
5) Remove the DR-35 board ❺ from the two ditches ❻.

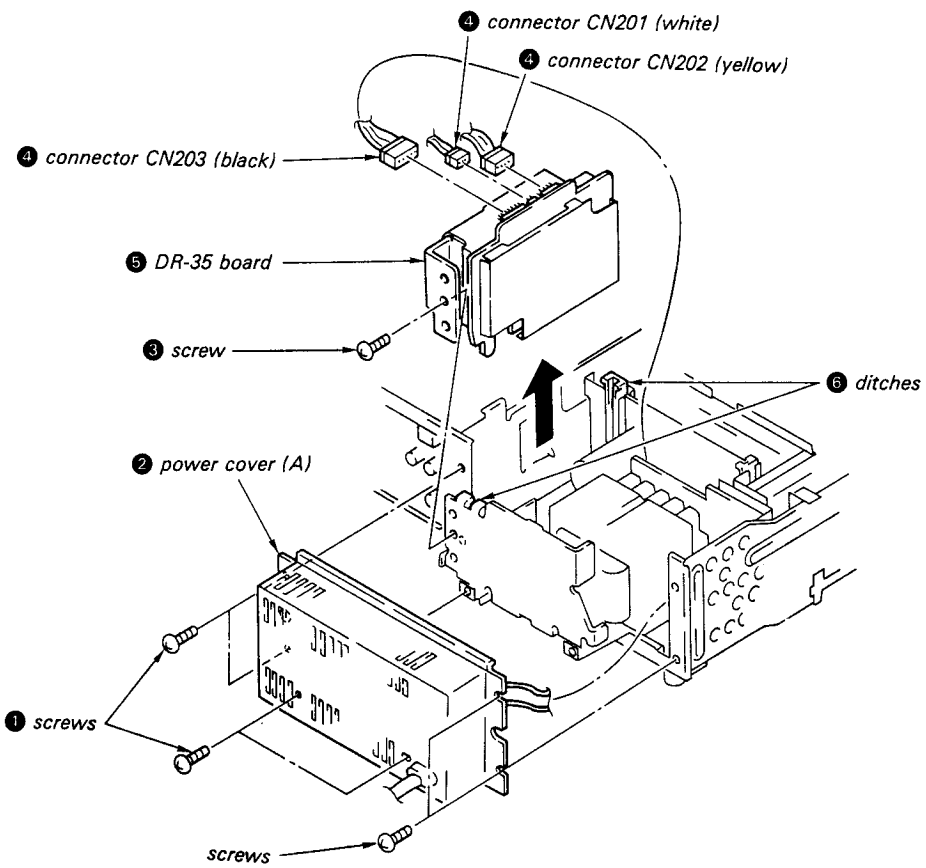

## 2-13. REMOVAL OF POWER BLOCK (DS-16 BOARD)

1) Refer to the "REMOVAL OF DT-63", and remove the DT-63 board.
2) Remove the four screws ❶.
3) Pull out the two connectors (CN102, CN401) ❷.
4) Remove the power block (DS-16 board) ❸.
5) Remove the two rivets ❹.
6) Remove the insulator ❺.

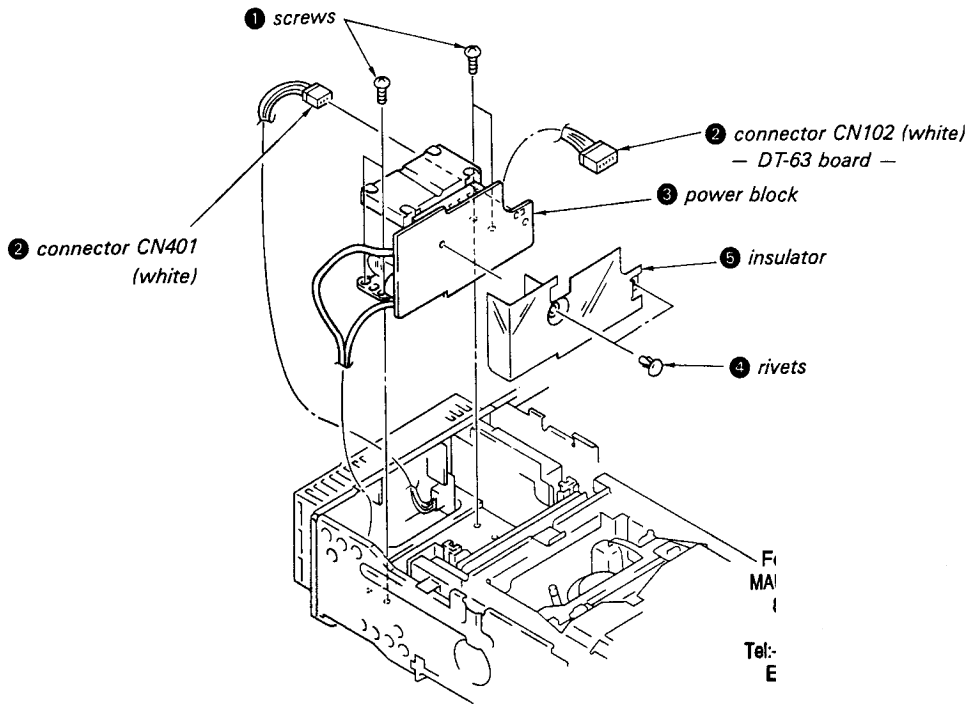


## 2-14. REMOVAL OF CASSETTE COMPARTMENT ASSEMBLY

1) Turn on the power and push the EJECT switch ❶ then put the cassette compartment assembly ❻ in the EJECT state.
2) Remove the eight screws ❷.
3) Take off the four claws ❸ and remove the two pilot lamps ❹.
4) Take off the claw ❺ and remove the cassette compartment assembly ❻.

**Note:** After performing EJECT state, be sure to turn off the power before separating the assembly.

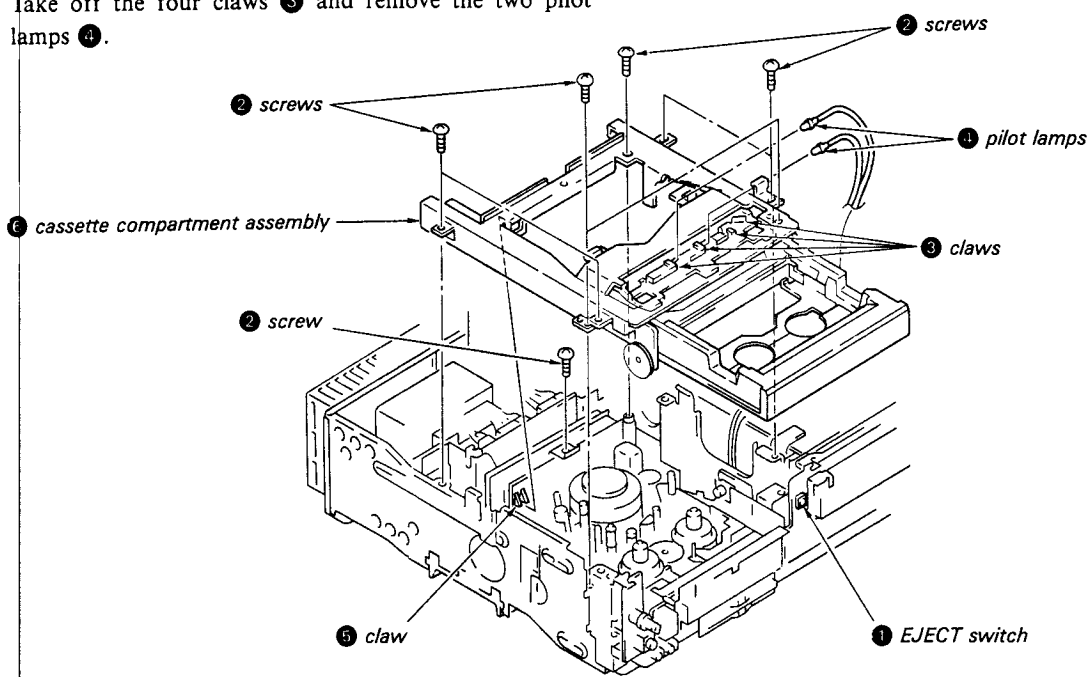

## 2-15. REMOVAL OF MECHANICAL BLOCK

1) Remove the four screws ❶.
2) Pull out the twenty one connectors (CN212, CN020, CN021, CN005, CN217, CN018, CN213, CN015, CN006, CN008, CN207, CN016, CN017, CN019, CN004, CN215, CN011, CN607, CN010, CN003, CN801) ❷.
3) Remove the mechanical block ❸ in the direction shown by the arrow.

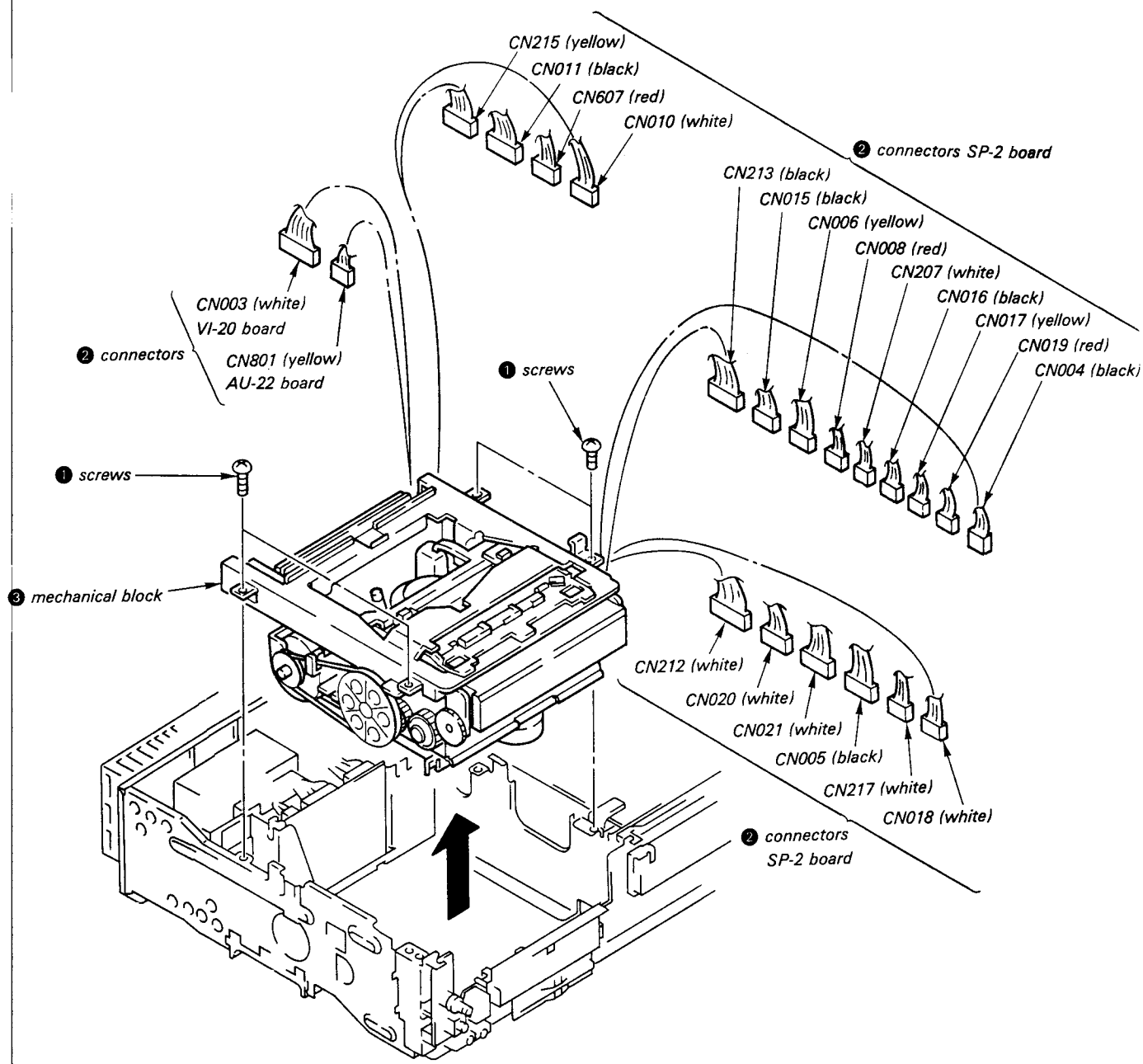

## 2-16. REMOVAL OF VP-1 BOARD

1) Refer to the "REMOVAL OF SP-2 BOARD", and open the SP-2 board.
2) Remove the two screws ❶.
3) Pull out the two connectors (CN001, CN002) ❷.
4) Remove the VP-1 board ❸ in the direction shown by the arrow.

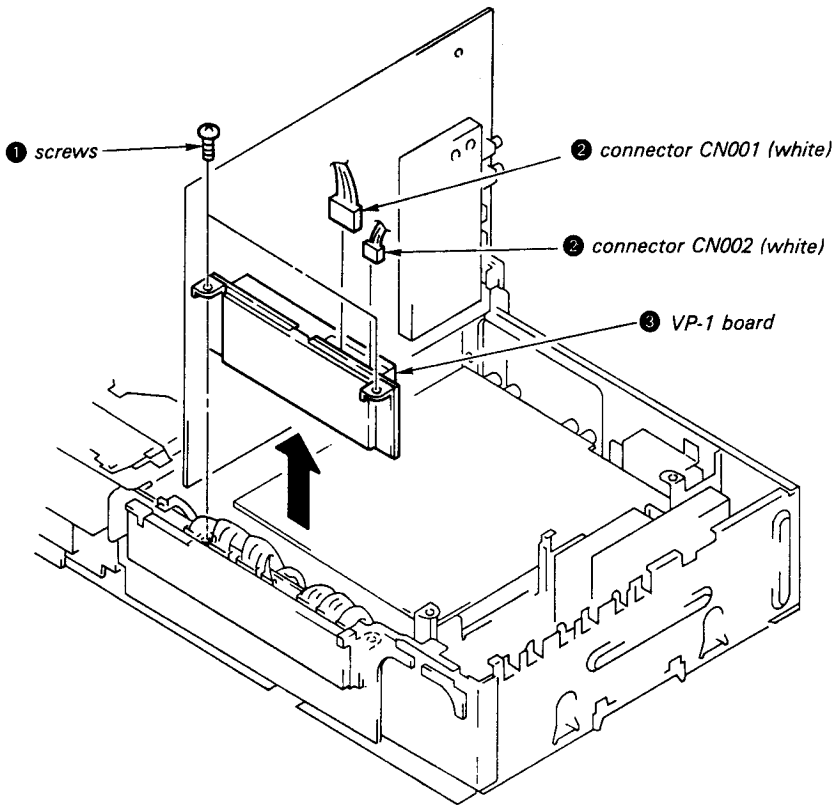

## 2-17. INTERNAL VIEWS

**—Top side—**

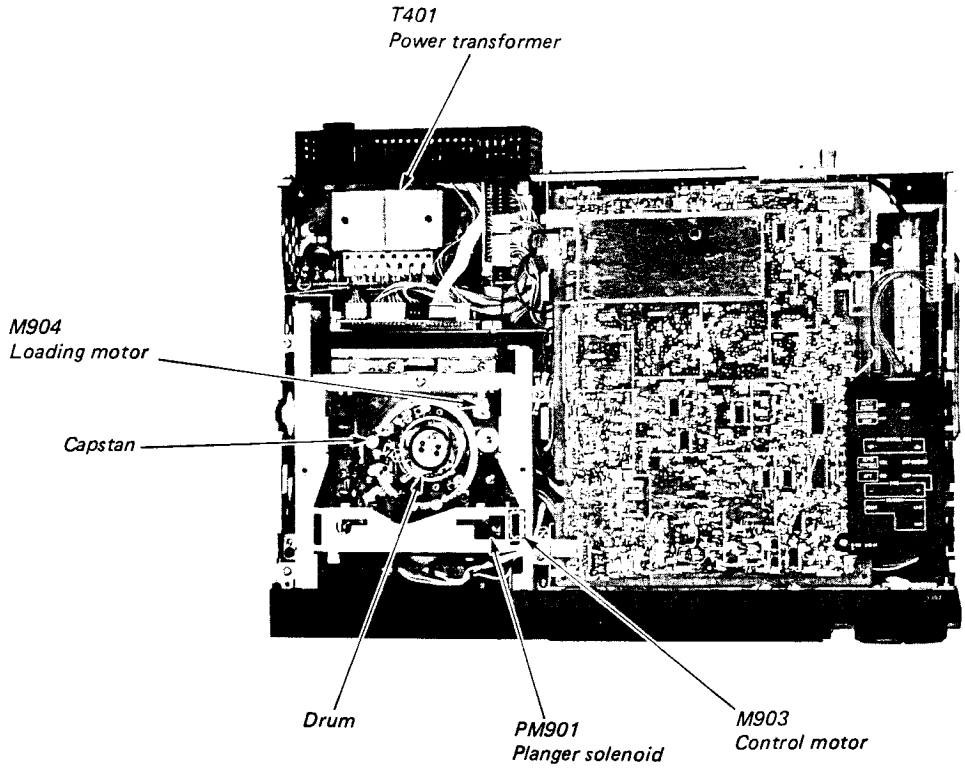


**—Bottom side—**

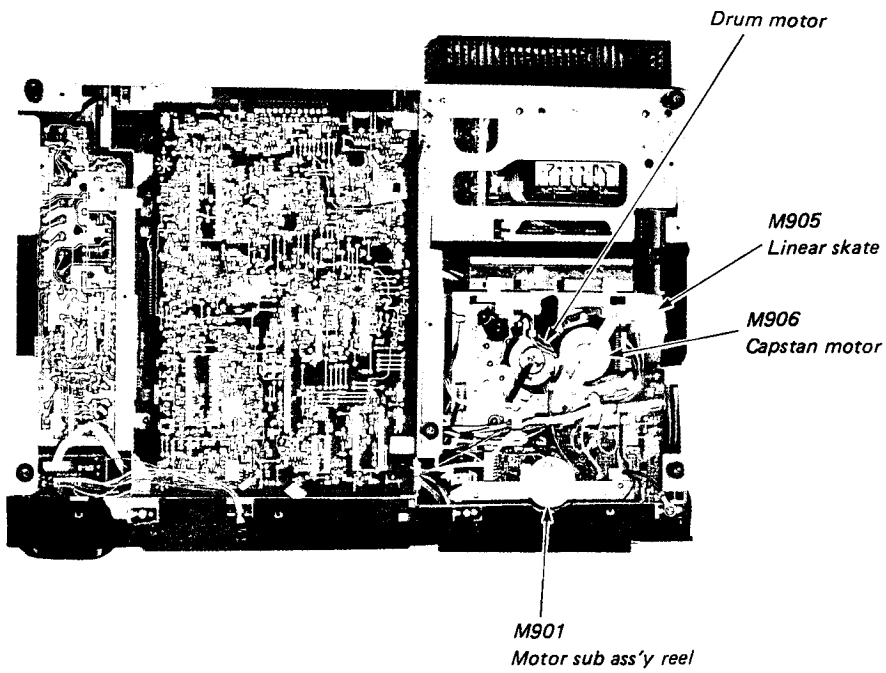

# SECTION 3
# DIAGRAMS

## 3-1. CIRCUT BOARDS LOCATION

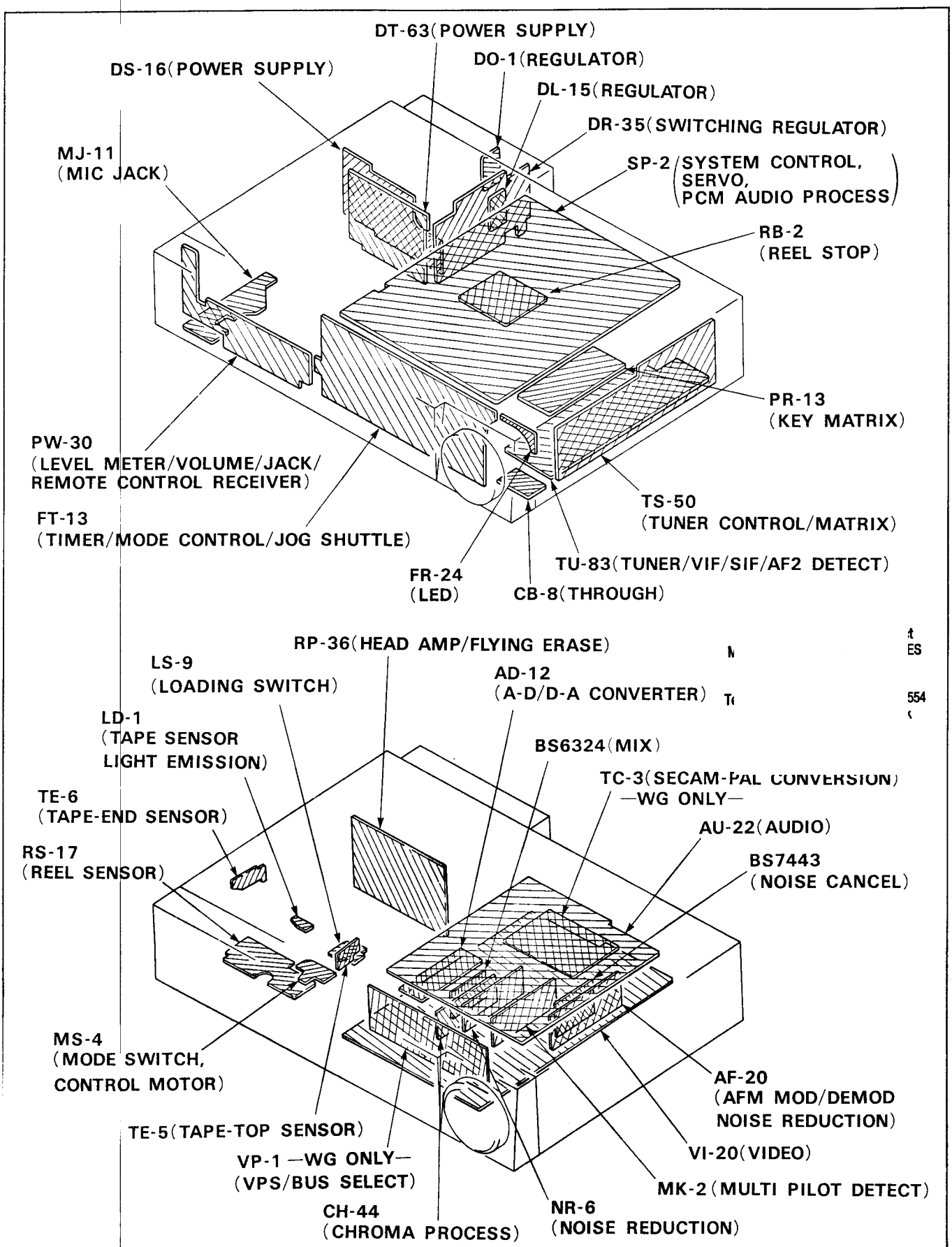

REGULATOR)
CONTROL,
O PROCESS)
3-2
EEL STOP)
PR-13
KEY MATRIX)
ROL/MATRIX)
AF2 DETECT)
CONVERSION)
AUDIO)
7443
OISE CANCEL)
MOD/DEMOD
REDUCTION)
EO)
PILOT DETECT)

## 3-2. OVERALL BLOCK DIAGRAM

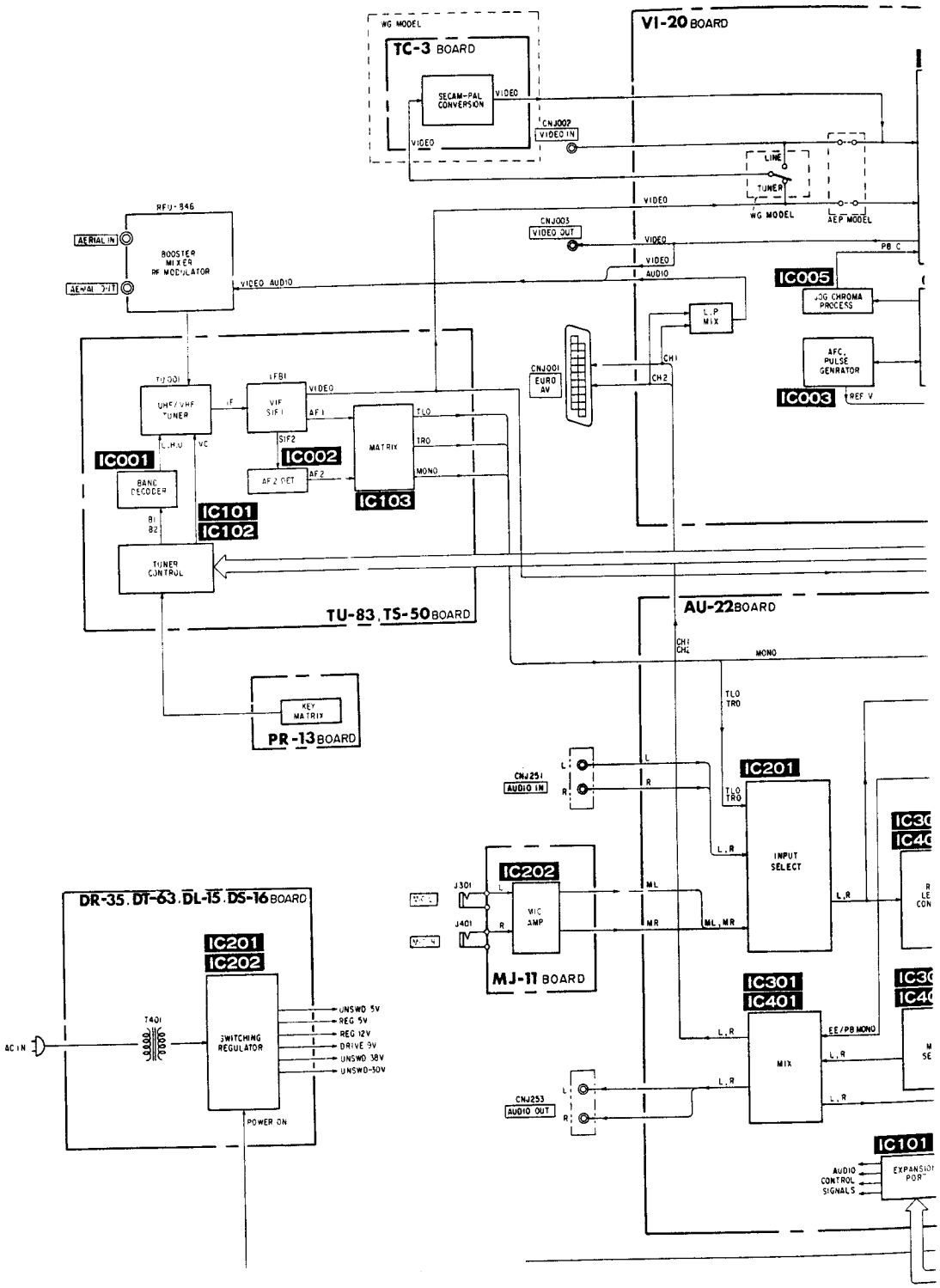

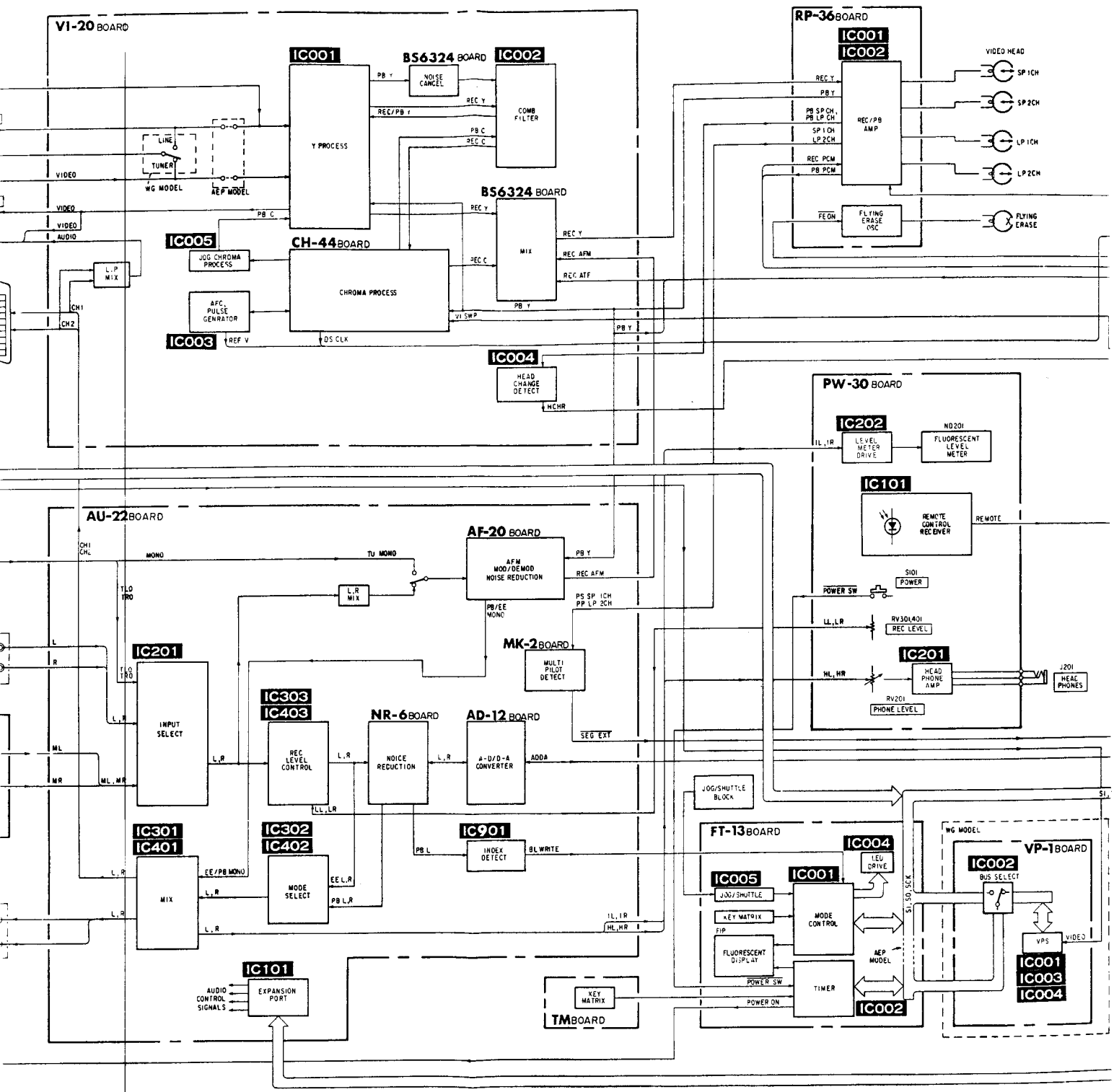
VI-20 BOARD
IC001
BS6324 BOARD
IC002
NOISE CANCEL
COMB FILTER
Y PROCESS
LINE
TUNER
WG MODEL
AEP MODEL
VIDEO
AUDIO
BS6324 BOARD
MIX
IC005
JOG CHROMA PROCESS
CH-44 BOARD
CHROMA PROCESS
AFC PULSE GENERATOR
IC003
L.P MIX
CH1
CH2
IC004
HEAD CHANGE DETECT
HCHR
RP-36 BOARD
IC001
IC002
REC/PB AMP
VIDEO HEAD
SP 1CH
SP 2CH
LP 1CH
LP 2CH
FLYING ERASE OSC
FLYING ERASE
PW-30 BOARD
IC202
LEVEL METER DRIVE
FLUORESCENT LEVEL METER
IC101
REMOTE CONTROL RECEIVER
REMOTE
POWER SW
POWER
RV301,401
REC LEVEL
IC201
HEAD PHONE AMP
J201
HEAD PHONES
RV201
PHONE LEVEL
AU-22 BOARD
AF-20 BOARD
AFM MOD/DEMOD NOISE REDUCTION
L,R MIX
MONO
TU MONO
MK-2 BOARD
MULTI PILOT DETECT
IC201
INPUT SELECT
IC303
IC403
REC LEVEL CONTROL
NR-6 BOARD
NOICE REDUCTION
AD-12 BOARD
A-D/D-A CONVERTER
SEG EXT
IC301
IC401
MIX
IC302
IC402
MODE SELECT
IC901
INDEX DETECT
IC101
EXPANSION PORT
AUDIO CONTROL SIGNALS
TM BOARD
KEY MATRIX
JOG/SHUTTLE BLOCK
FT-13 BOARD
IC004
LED DRIVE
IC005
JOG/SHUTTLE
KEY MATRIX
FIP
FLUORESCENT DISPLAY
IC001
MODE CONTROL
TIMER
IC002
VP-1 BOARD
BUS SELECT
VPS
IC001
IC003
IC004

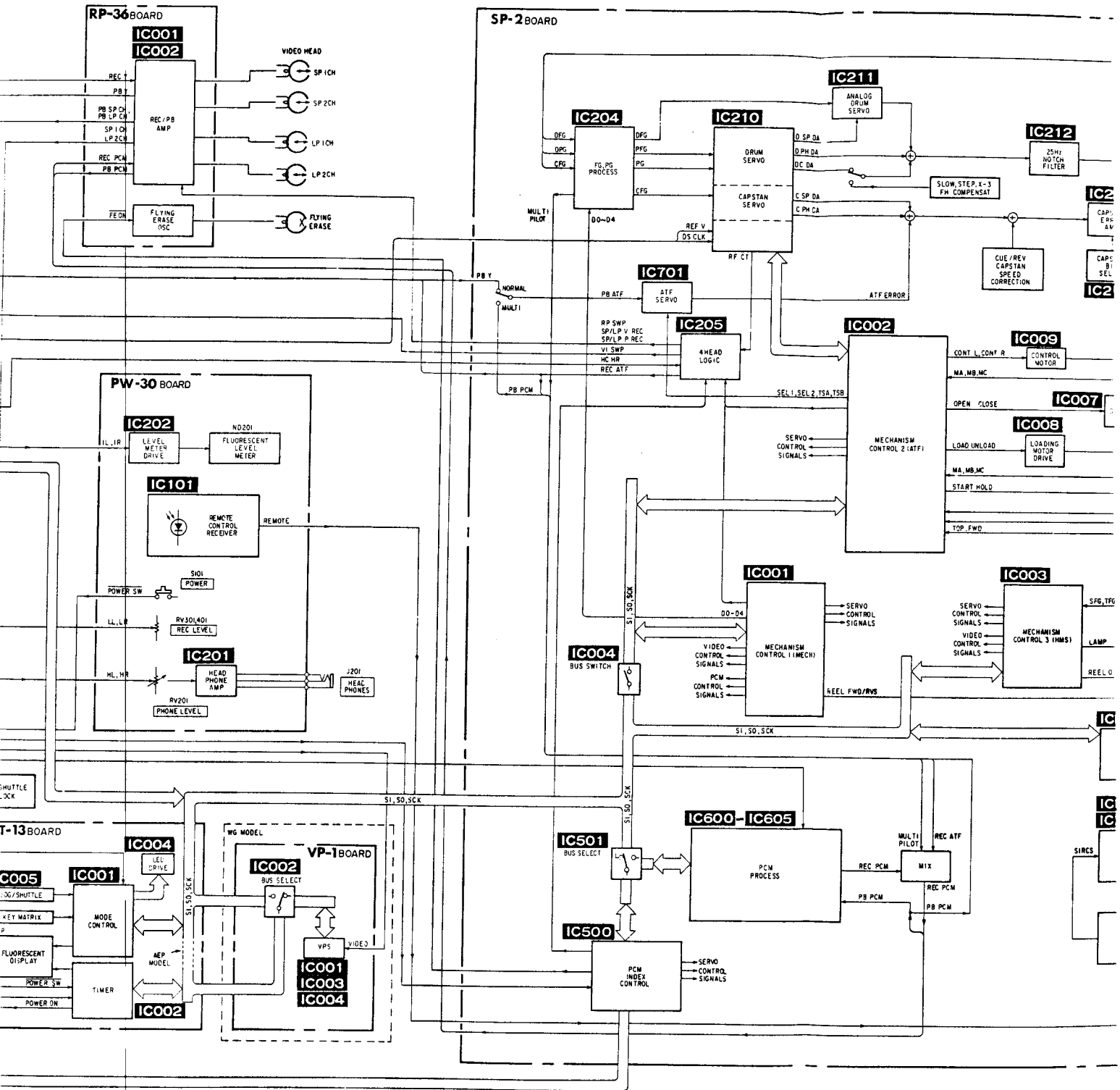


For Service Manuals Contact

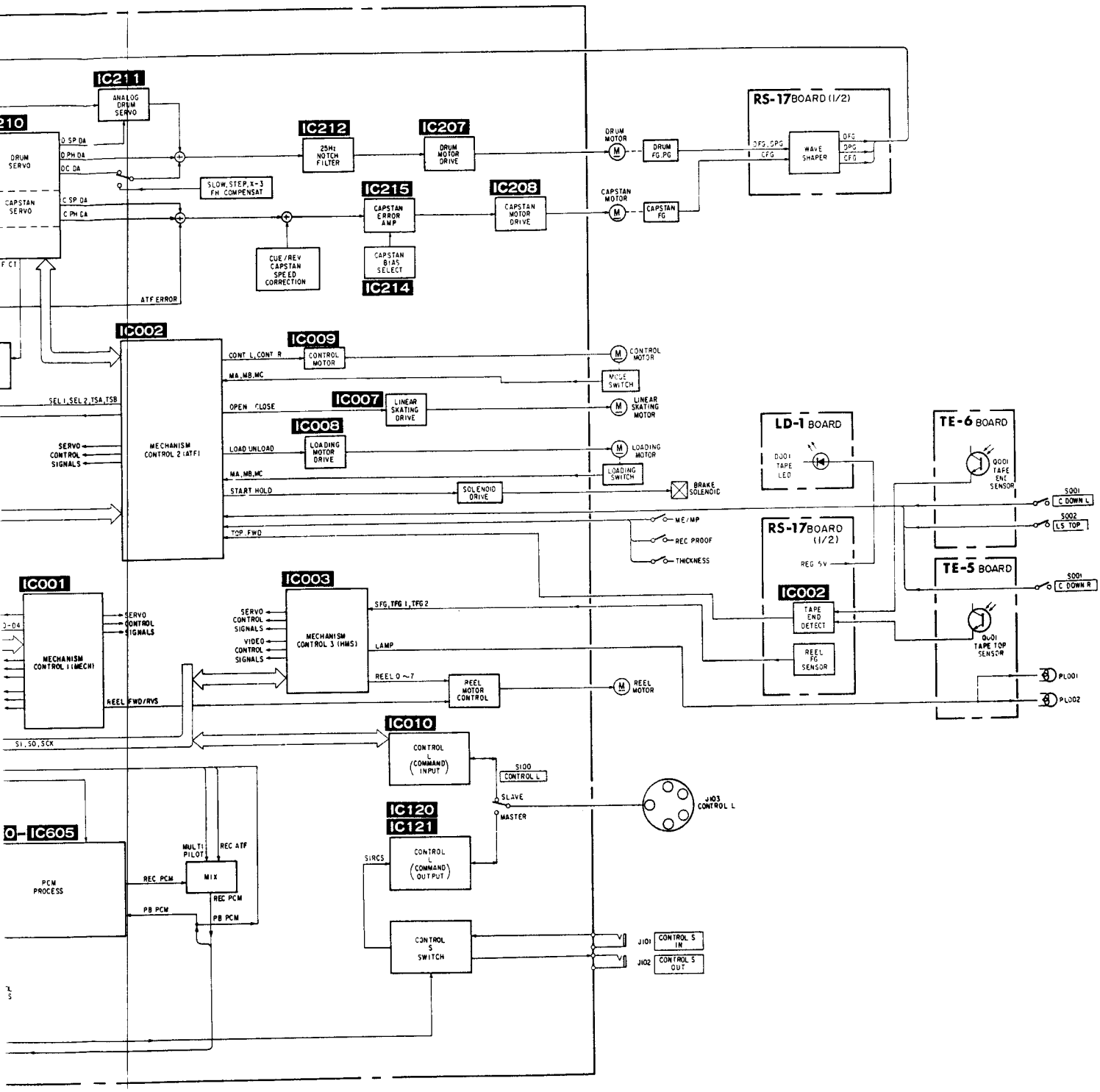
IC211
ANALOG DRUM SERVO
IC212
25Hz NOTCH FILTER
IC207
DRUM MOTOR DRIVE
IC215
CAPSTAN ERROR AMP
IC208
CAPSTAN MOTOR DRIVE
IC214
CAPSTAN BIAS SELECT
IC002
MECHANISM CONTROL 2 (ATF)
IC009
CONTROL MOTOR
IC007
LINEAR SKATING DRIVE
IC008
LOADING MOTOR DRIVE
IC001
MECHANISM CONTROL 1 (MECH)
IC003
MECHANISM CONTROL 3 (HMS)
IC010
CONTROL L (COMMAND INPUT)
IC120
IC121
CONTROL L (COMMAND OUTPUT)
IC605
PCM PROCESS
MIX
CONTROL S SWITCH
RS-17 BOARD (1/2)
WAVE SHAPER
LD-1 BOARD
TAPE LED
TE-6 BOARD
TAPE END SENSOR
TE-5 BOARD
TAPE TOP SENSOR
TAPE END DETECT
REEL FG SENSOR
REEL MOTOR CONTROL
DRUM SERVO
CAPSTAN SERVO
DRUM MOTOR
CAPSTAN MOTOR
DRUM FG,PG
CAPSTAN FG
CUE/REV CAPSTAN SPEED CORRECTION
SLOW, STEP, X-3 FM COMPENSAT
ATF ERROR
CONT L, CONT R
MA, MB, MC
OPEN CLOSE
LOAD UNLOAD
START HOLD
SOLENOID DRIVE
BRAKE SOLENOID
MODE SWITCH
LOADING MOTOR
LOADING SWITCH
LINEAR SKATING MOTOR
ME/MP
REC PROOF
THICKNESS
TOP FWD
SEL 1, SEL 2, TSA, TSB
SERVO CONTROL SIGNALS
REEL FWD/RVS
SFG, TFG 1, TFG 2
LAMP
REEL 0 ~7
REEL MOTOR
S1, S0, SCK
SIRCS
SLAVE
MASTER
S100 CONTROL L
J103 CONTROL L
J101 CONTROL S IN
J102 CONTROL S OUT
S001 C DOWN L
S002 LS TOP
S001 C DOWN R
PL001
PL002
MULTI PILOT
REC ATF
REC PCM
PB PCM

## 3-3. VIDEO BLOCK DIAGRAM

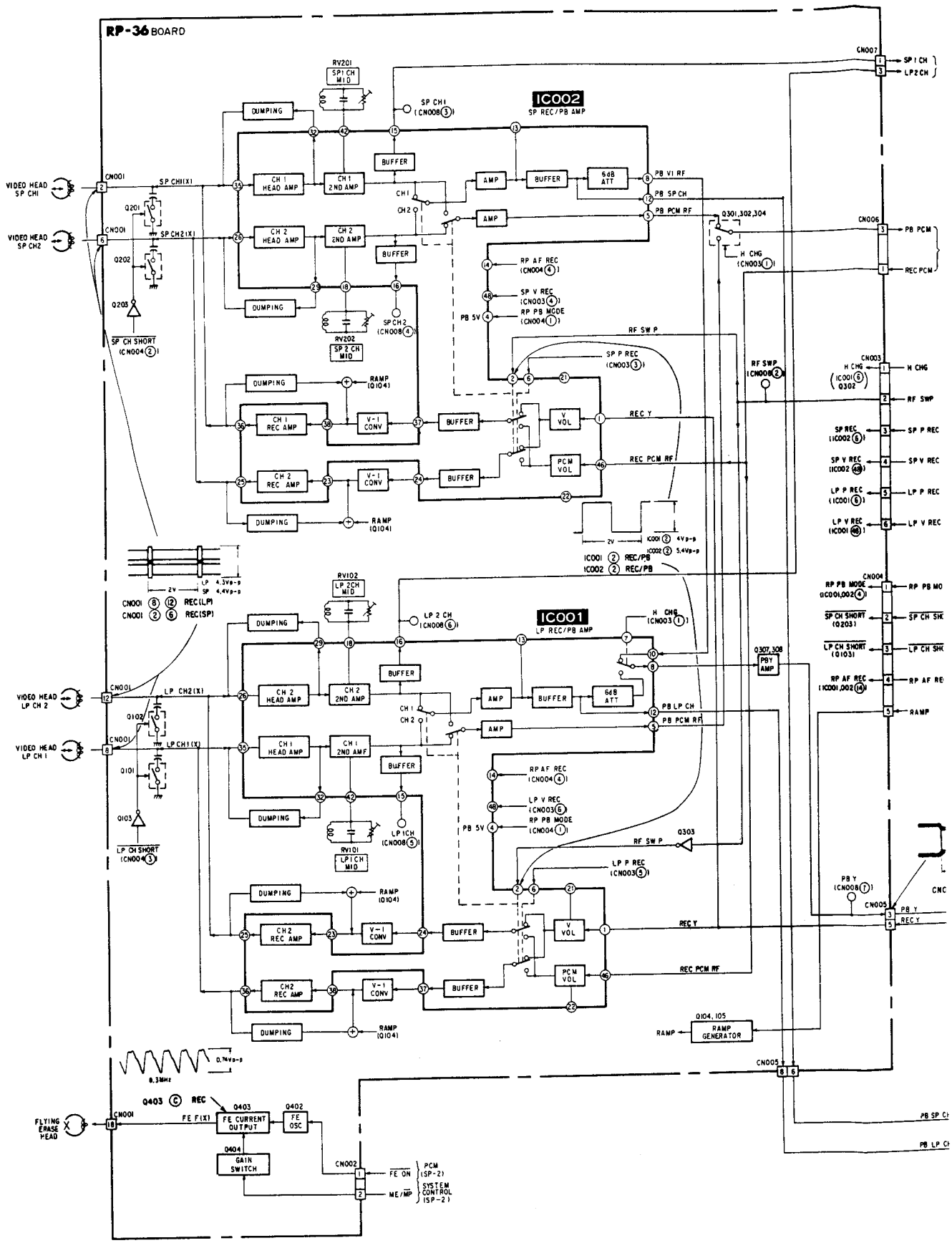

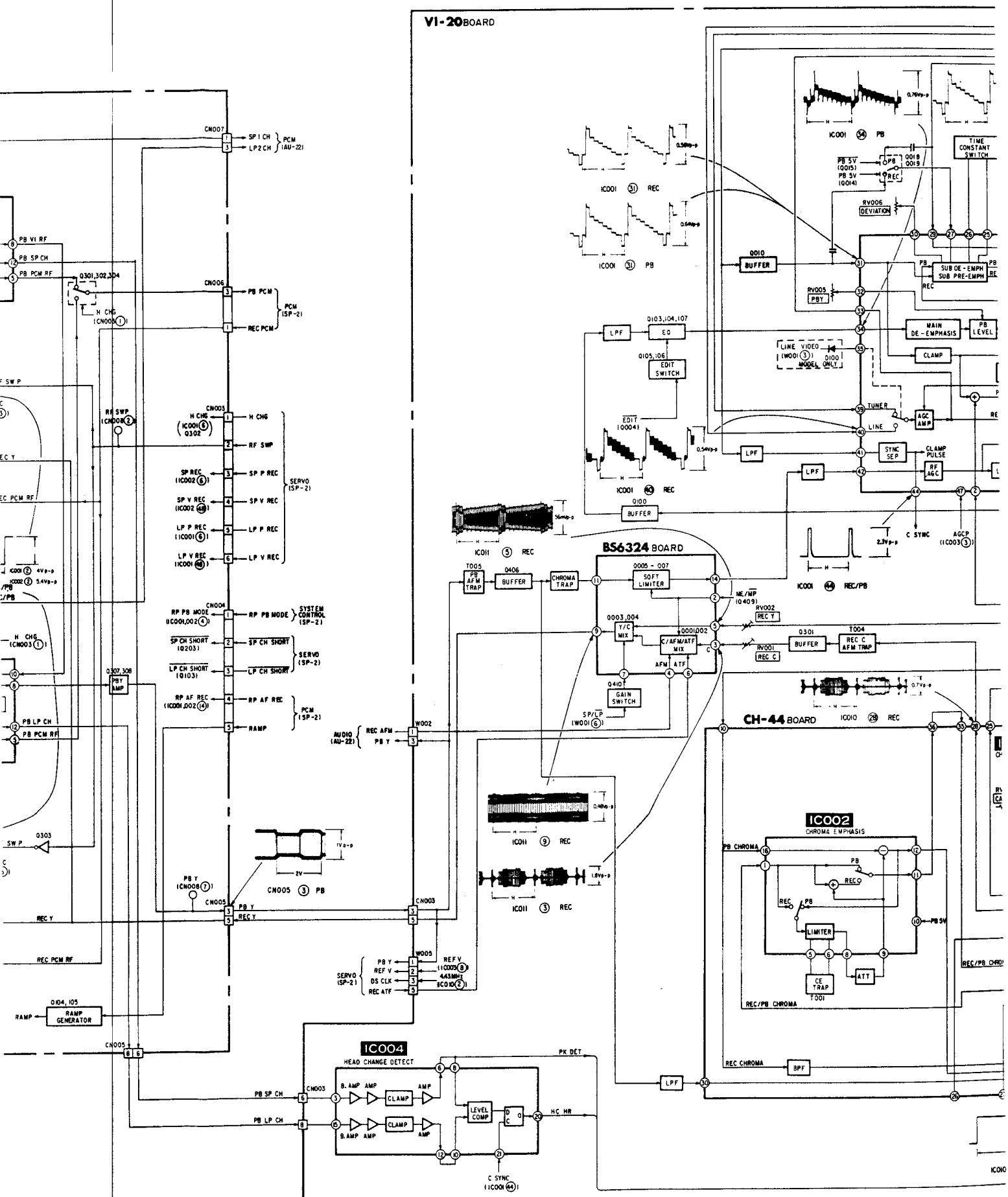
VI-20 BOARD
BS6324 BOARD
CH-44 BOARD
IC002
CHROMA EMPHASIS
IC004
HEAD CHANGE DETECT
PCM (AU-22)
PCM (SP-2)
SERVO (SP-2)
SYSTEM CONTROL (SP-2)
AUDIO (AU-22)
RAMP GENERATOR
BUFFER
LPF
EQ
EDIT SWITCH
MAIN DE-EMPHASIS
PB LEVEL
CLAMP
AGC AMP
SYNC SEP
RF AGC
CLAMP PULSE
C SYNC
AGCP
TIME CONSTANT SWITCH
DEVIATION
SUB DE-EMPH
SUB PRE-EMPH
PB HEAD AFM TRAP
CHROMA TRAP
SOFT LIMITER
Y/C MIX
C/AFM/ATF MIX
GAIN SWITCH
REC C AFM TRAP
CHROMA TRAP
LIMITER
CE TRAP
ATT
BPF
LEVEL COMP
PK DET
HC HR
REC/PB CHROMA
REC CHROMA

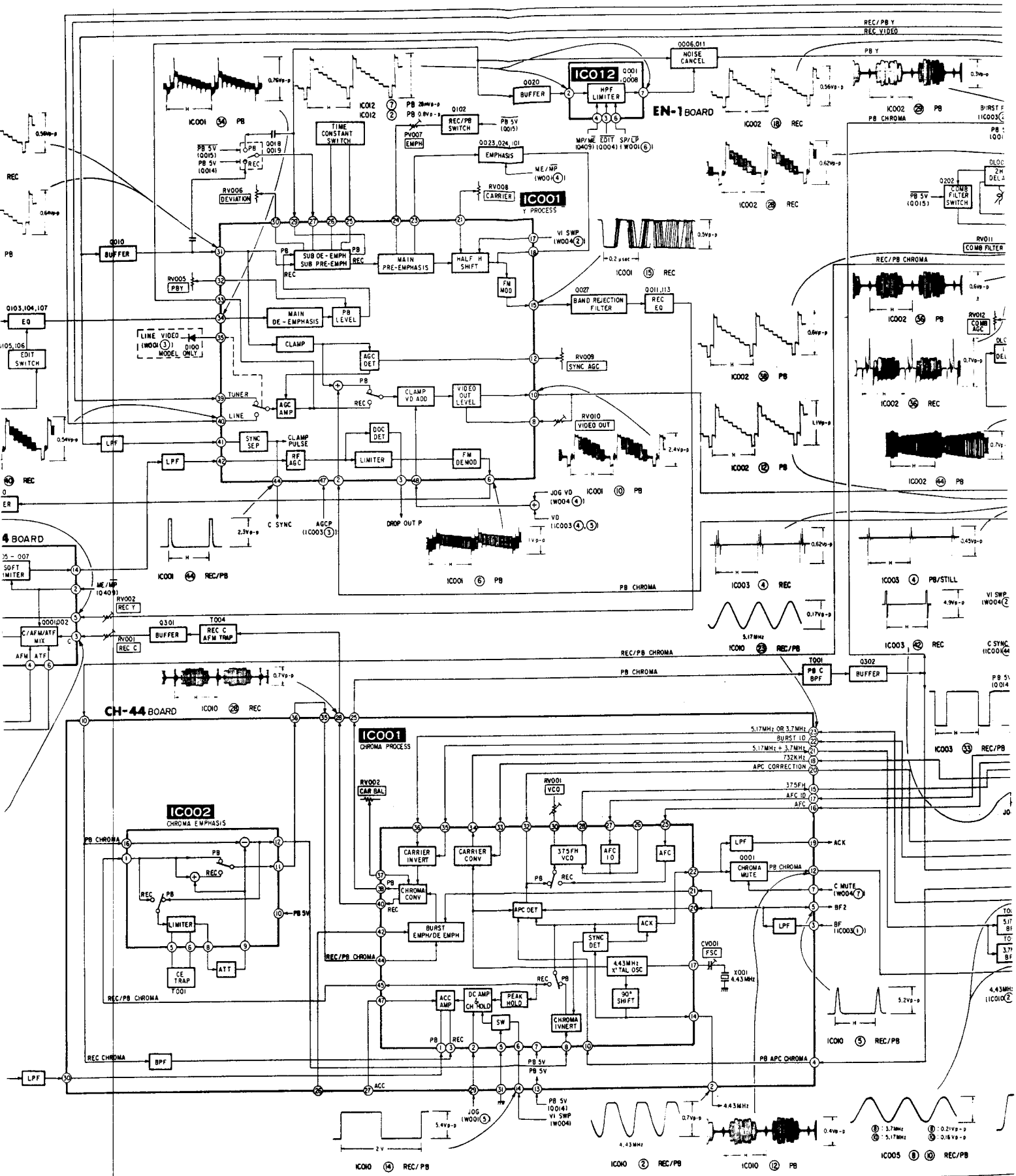




For Service Manuals Contact

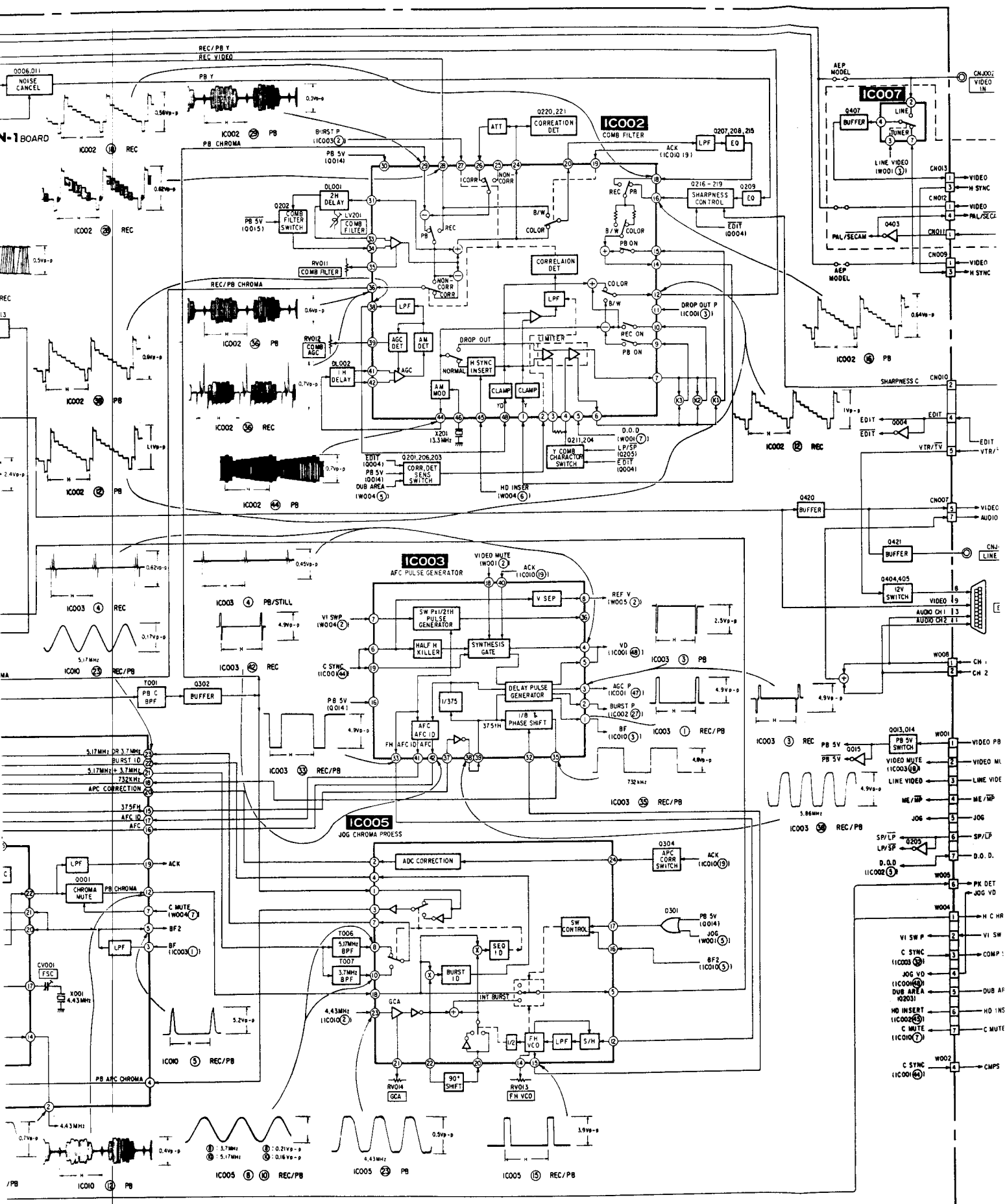
IC002
COMB FILTER
IC003
AFC PULSE GENERATOR
IC005
JOG CHROMA PROESS
IC007
NOISE CANCEL
CORREATION DET
SHARPNESS CONTROL
COMB FILTER SWITCH
COMB FILTER
CORRELAION DET
AGC DET
AM DET
H SYNC INSERT
LIMITER
CLAMP
Y COMB CHARACTOR SWITCH
CORR.DET SENS SWITCH
BUFFER
12V SWITCH
PB 5V SWITCH
SW PX1/21H PULSE GENERATOR
HALF H KILLER
SYNTHESIS GATE
DELAY PULSE GENERATOR
1/8 & PHASE SHIFT
AFC AFC ID
ADC CORRECTION
APC CORR SWITCH
SW CONTROL
BURST ID
SEQ ID
INT BURST
FH VCO
S/H
90° SHIFT
GCA
CHROMA MUTE
PB C BPF
PB 5V SWITCH
REC/PB Y
REC VIDEO
PB CHROMA
REC/PB CHROMA
PB APC CHROMA
AEP MODEL
VIDEO IN
LINE VIDEO
SHARPNESS C
VIDEO
AUDIO
VIDEO PB
VIDEO MUTE
LINE VIDEO
JOG
PK DET
JOG VD
H C HR
VI SW P
C SYNC
JOG VD
DUB AREA
HD INSERT
C MUTE
CMPS
PB/STILL
REC/PB
PB
REC

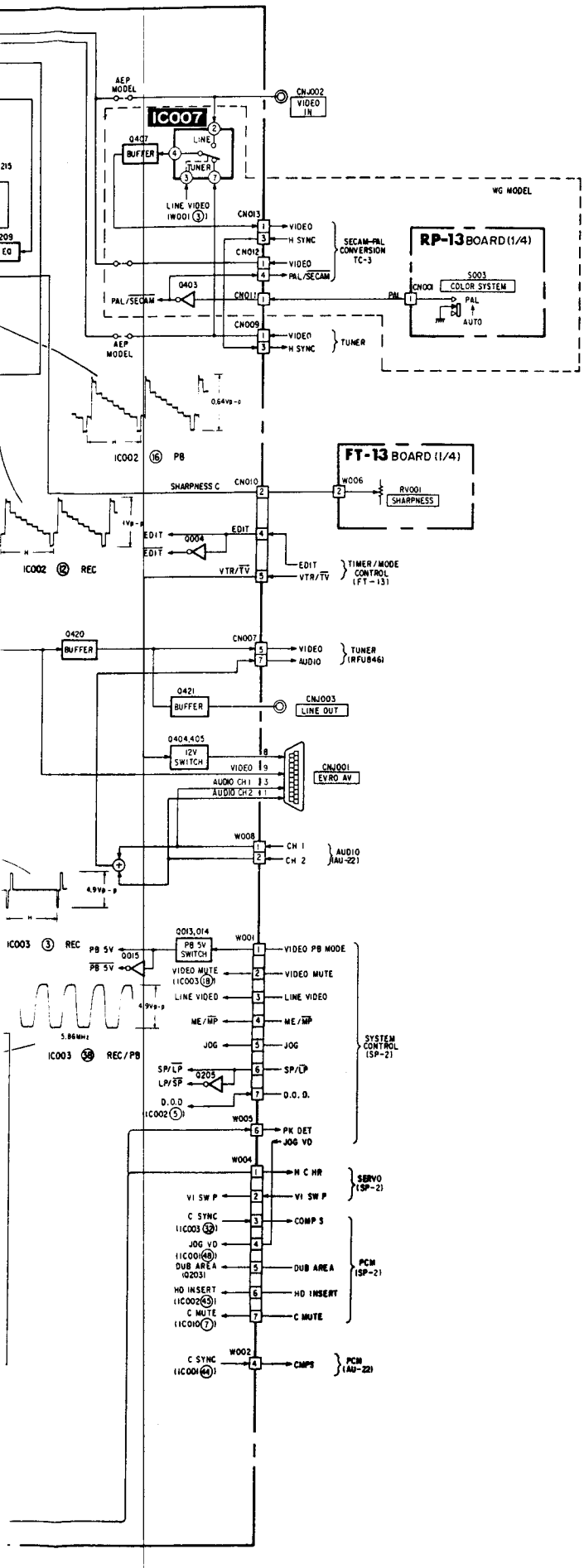
AEP MODEL
CNJ002 VIDEO IN
IC007
Q407 BUFFER
LINE
TUNER
LINE VIDEO IW001 (3)
WG MODEL
CN013 VIDEO
H SYNC
SECAM-PAL CONVERSION TC-3
CN012 VIDEO
PAL/SECAM
RP-13 BOARD (1/4)
S003 COLOR SYSTEM
CN001
PAL
AUTO
Q403
CN011
PAL/SECAM
CN009 VIDEO
H SYNC
TUNER
AEP MODEL
0.64Vp-p
IC002 (16) PB
FT-13 BOARD (1/4)
SHARPNESS C
CN010
W006
RV001 SHARPNESS
EDIT
Q004
EDIT
VTR/TV
TIMER/MODE CONTROL (FT-13)
IC002 (12) REC
Q420 BUFFER
CN007 VIDEO
AUDIO
TUNER (RFU846)
Q421 BUFFER
CNJ003 LINE OUT
Q404,405 12V SWITCH
VIDEO
AUDIO CH1
AUDIO CH2
CNJ001 EVRO AV
W008 CH 1
CH 2
AUDIO (AU-22)
4.9Vp-p
IC003 (3) REC
Q013,014 PB 5V SWITCH
PB 5V
Q015
PB 5V
W001
VIDEO PB MODE
VIDEO MUTE (IC003 (18))
VIDEO MUTE
LINE VIDED
LINE VIDEO
ME/MP
JOG
SP/LP
LP/SP
Q205
D.O.D (IC002 (5))
D.O.D.
SYSTEM CONTROL (SP-21)
4.9Vp-p
5.86MHz
IC003 (38) REC/PB
W005
PK DET
JOG VD
W004
H C HR
VI SW P
C SYNC (IC003 (32))
COMP S
JOG VD (IC001 (48))
DUB AREA (Q203)
DUB AREA
HD INSERT (IC002 (45))
HD INSERT
C MUTE (IC010 (7))
C MUTE
SERVO (SP-21)
PCM (SP-21)
W002
C SYNC (IC001 (44))
CMPS
PCM (AU-22)

## 3-4. SECAM/PAL CONVERSION BLOCK DIAGRAM

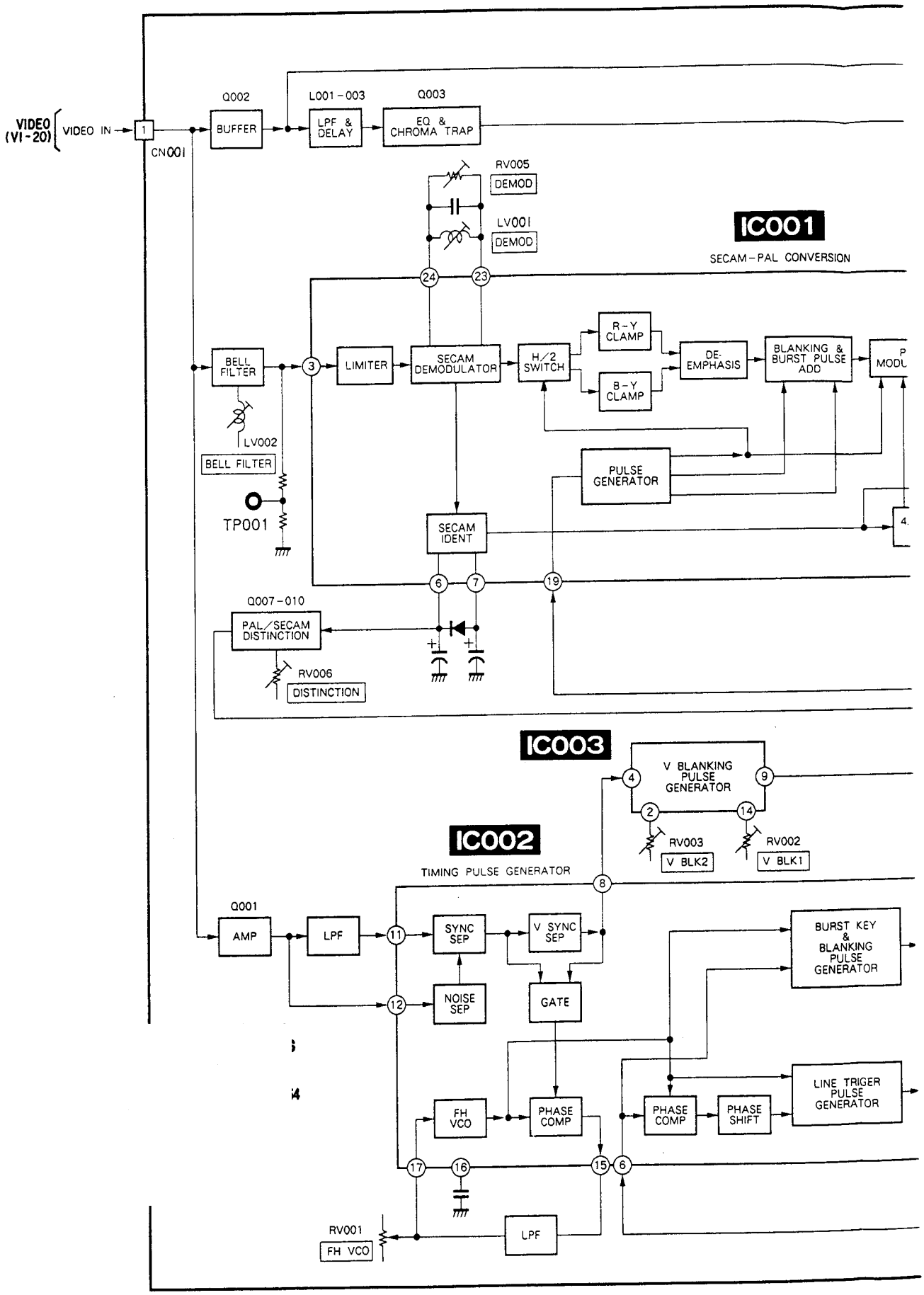

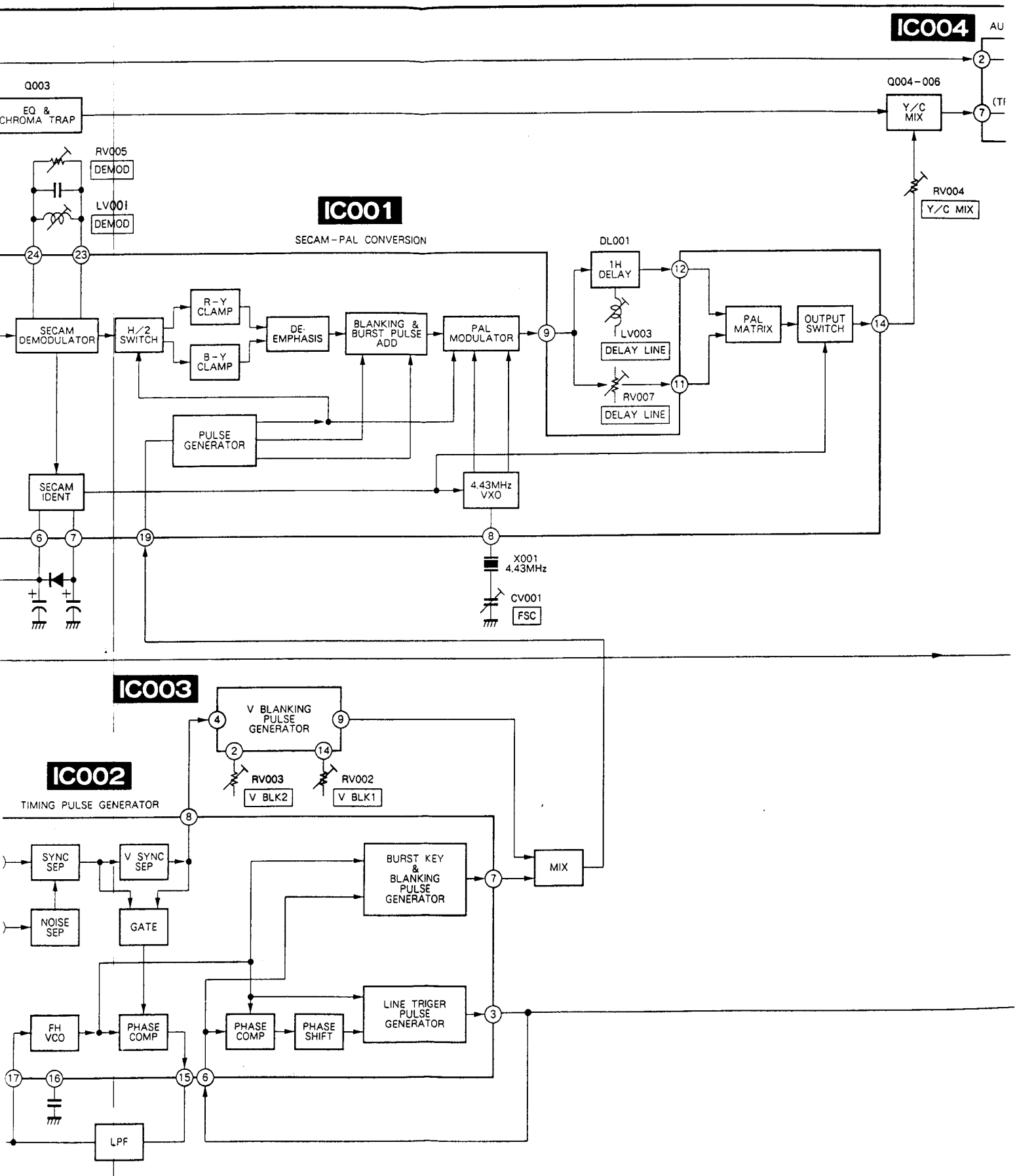
IC004
Q003
EQ & CHROMA TRAP
Q004-006
Y/C MIX
RV005
DEMOD
LV001
DEMOD
RV004
Y/C MIX
IC001
SECAM-PAL CONVERSION
DL001
1H DELAY
LV003
DELAY LINE
RV007
DELAY LINE
SECAM DEMODULATOR
H/2 SWITCH
R-Y CLAMP
B-Y CLAMP
DE-EMPHASIS
BLANKING & BURST PULSE ADD
PAL MODULATOR
PAL MATRIX
OUTPUT SWITCH
PULSE GENERATOR
SECAM IDENT
4.43MHz VXO
X001 4.43MHz
CV001
FSC
IC003
V BLANKING PULSE GENERATOR
RV003
V BLK2
RV002
V BLK1
IC002
TIMING PULSE GENERATOR
SYNC SEP
V SYNC SEP
NOISE SEP
GATE
BURST KEY & BLANKING PULSE GENERATOR
MIX
FH VCO
PHASE COMP
PHASE COMP
PHASE SHIFT
LINE TRIGER PULSE GENERATOR
LPF

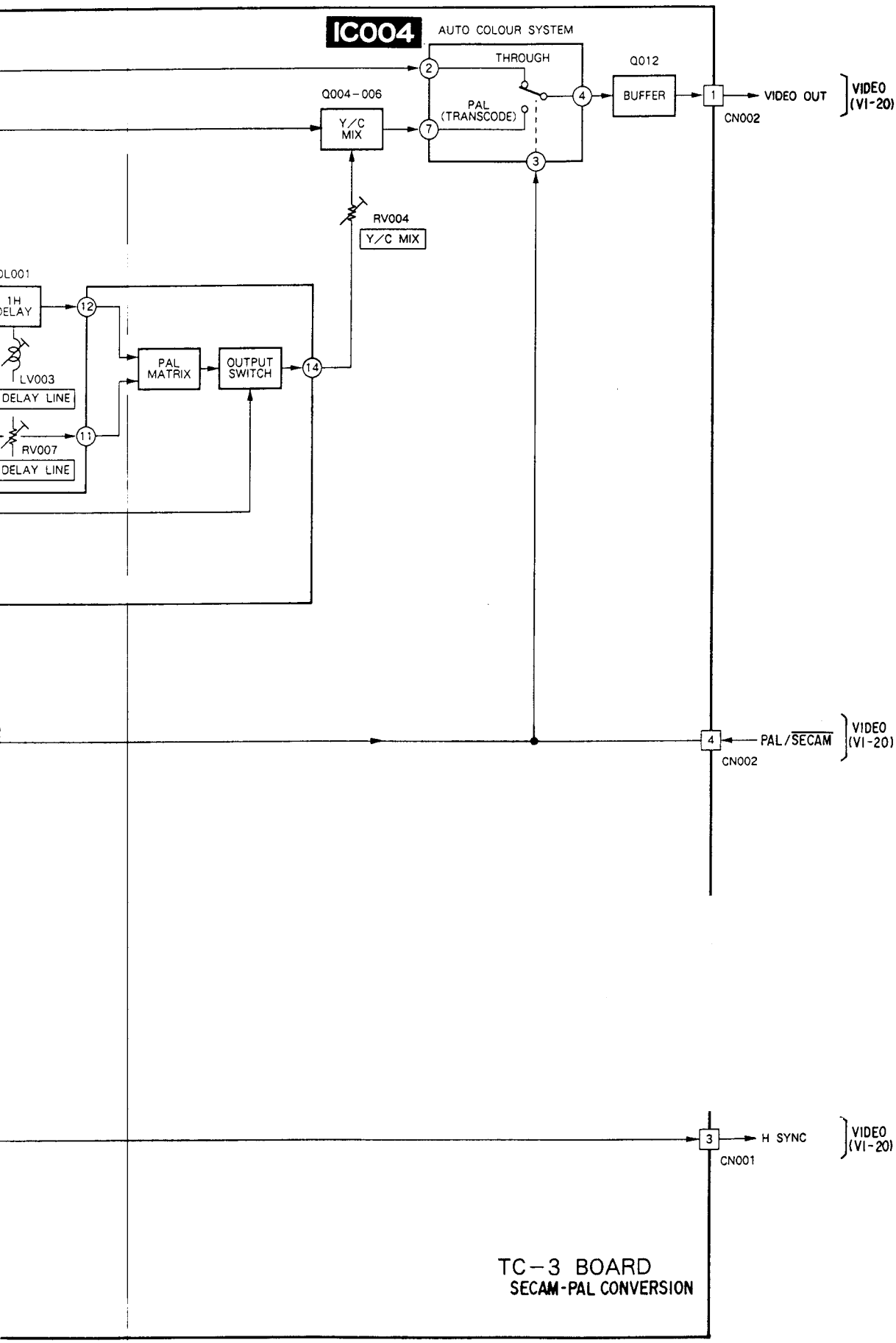


TC-3 BOARD
SECAM-PAL CONVERSION

## 3-5. SERVO BLOCK DIAGRAM

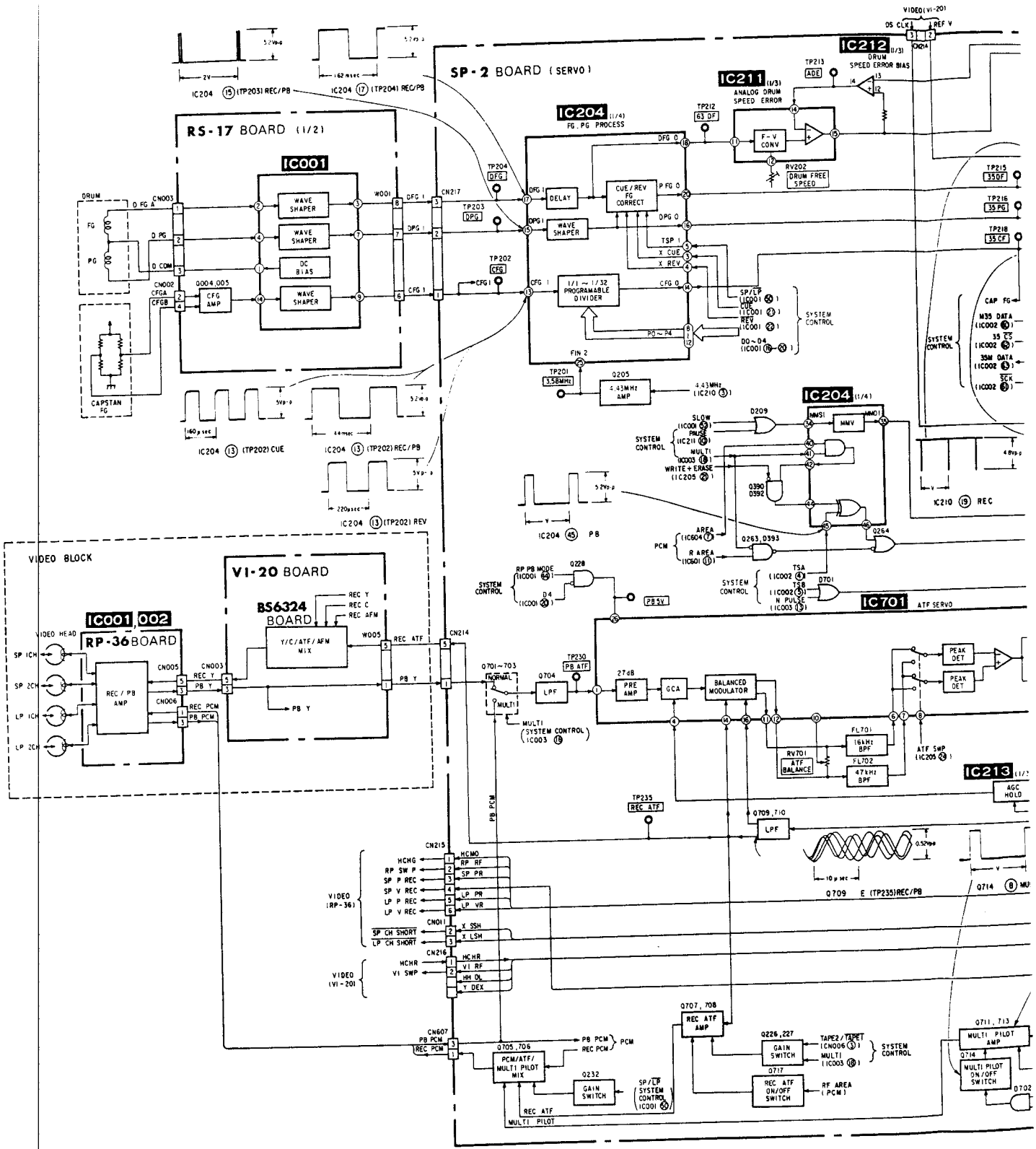

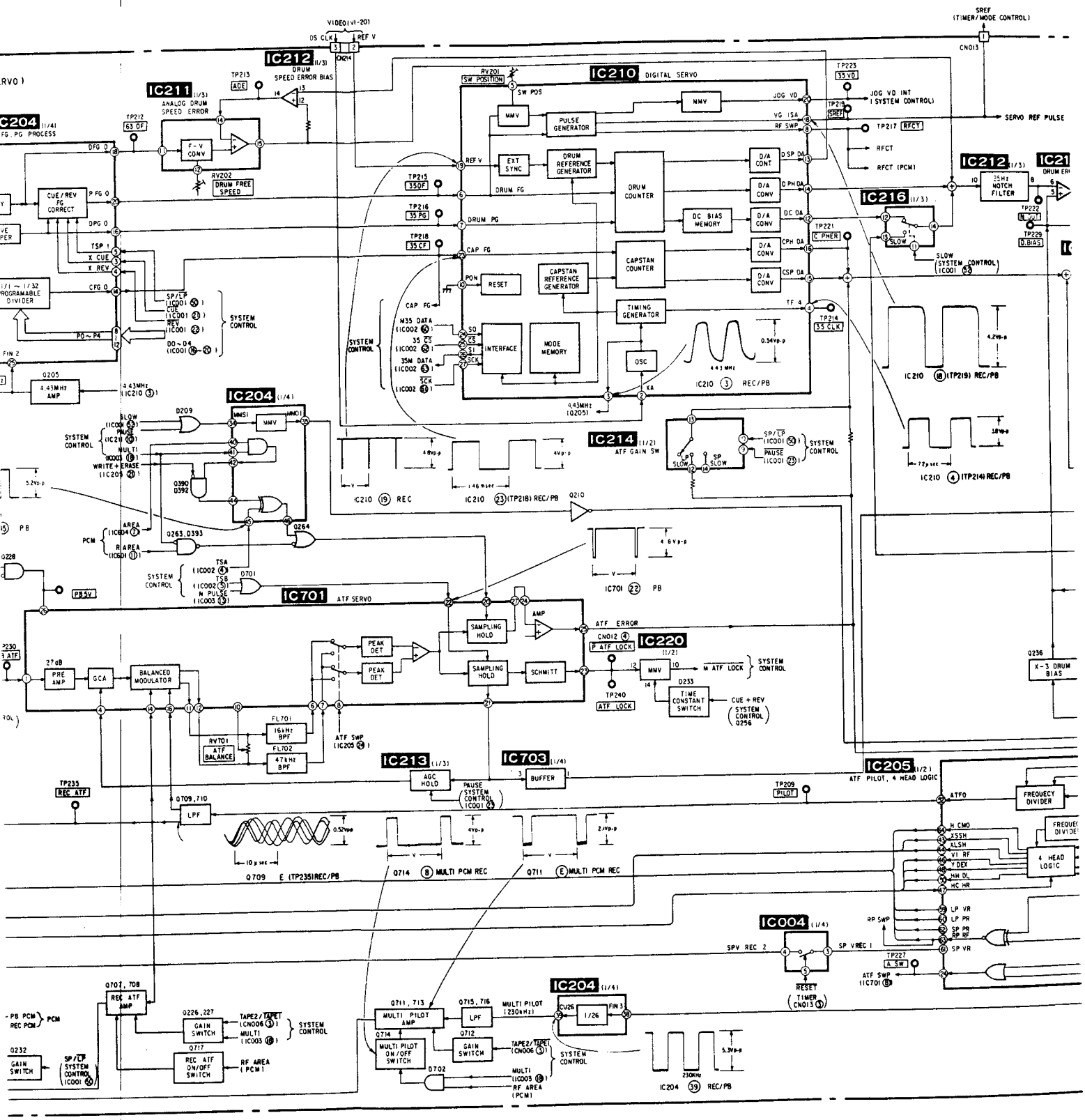
IC212 (1/3) DRUM SPEED ERROR BIAS
IC211 (1/3) ANALOG DRUM SPEED ERROR
IC210 DIGITAL SERVO
IC204 (1/4)
IC216 (1/3)
IC214 (1/2) ATF GAIN SW
IC701 ATF SERVO
IC220 (1/2)
IC213 (1/3) AGC HOLD
IC703 (1/4) BUFFER
IC205 (1/2) ATF PILOT, 4 HEAD LOGIC
IC004 (1/4)
IC204 (1/4)
SERVO REF PULSE
JOG VD INT (SYSTEM CONTROL)
RFCT
RFCT (PCM)
SYSTEM CONTROL
PRE AMP
GCA
BALANCED MODULATOR
SAMPLING HOLD
PEAK DET
SCHMITT
TIME CONSTANT SWITCH
CUE + REV (SYSTEM CONTROL Q256)
ATF ERROR
M ATF LOCK
FREQUECY DIVIDER
4 HEAD LOGIC
MULTI PILOT AMP
MULTI PILOT ON/OFF SWITCH
GAIN SWITCH
REC ATF AMP
REC ATF ON/OFF SWITCH
RF AREA (PCM)
SPV REC 2
SP VREC 1
RESET (TIMER CN013)
IC210 (3) REC/PB
IC210 (18) (TP219) REC/PB
IC210 (4) (TP214) REC/PB
IC210 (19) REC
IC210 (23) (TP218) REC/PB
IC701 (22) PB
IC210 (39) REC/PB
Q709 E (TP235) REC/PB
Q714 (8) MULTI PCM REC
Q711 (E) MULTI PCM REC

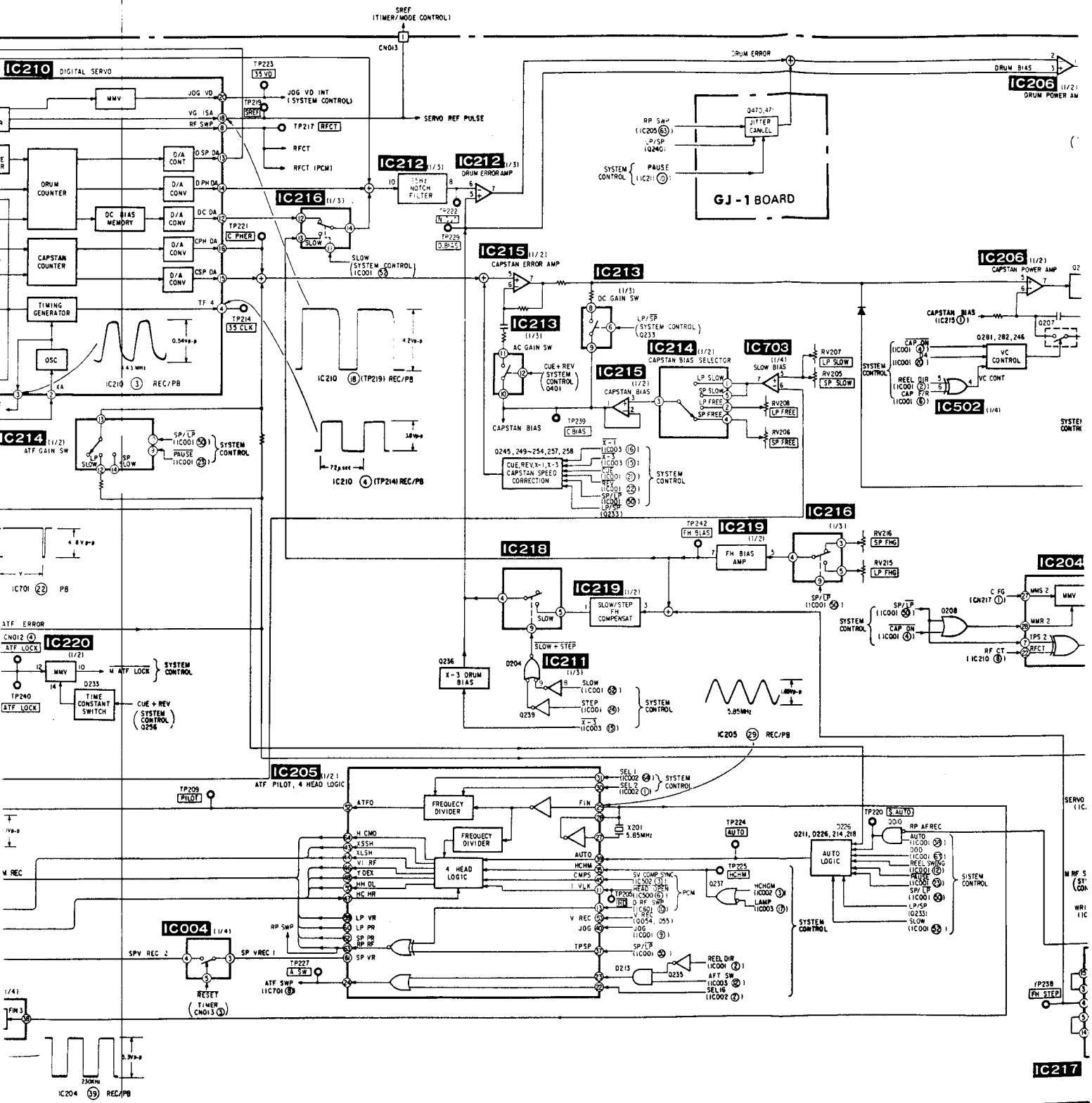

SREF (TIMER/MODE CONTROL)
CN013
IC210 DIGITAL SERVO
MMV
JOG VD
VG ISA
RF SWP
TP223 35 VD
JOG VD INT (SYSTEM CONTROL)
TP219 SREF
SERVO REF PULSE
TP217 RFCT
RFCT
RFCT (PCM)
DRUM COUNTER
D/A CONT
D/A CONV
DC BIAS MEMORY
CAPSTAN COUNTER
TIMING GENERATOR
OSC
TP221 C PHER
TP214 35 CLK
IC212 (1/3) 15Hz NOTCH FILTER
IC212 (1/3) DRUM ERROR AMP
IC216 (1/3)
SLOW
SLOW (SYSTEM CONTROL) (IC001 52)
IC215 (1/2) CAPSTAN ERROR AMP
IC213 (1/3) DC GAIN SW
IC213 (1/3) AC GAIN SW
CUE + REV (SYSTEM CONTROL Q40)
CAPSTAN BIAS
TP239 C BIAS
IC214 (1/2) CAPSTAN BIAS SELECTOR
IC215 (1/2) CAPSTAN BIAS
IC703 (1/4) SLOW BIAS
RV207 LP SLOW
RV205 SP SLOW
RV208 LP FREE
RV206 SP FREE
Q245, 249~254, 257, 258
CUE, REV, X-1, X-3 CAPSTAN SPEED CORRECTION
SYSTEM CONTROL
DRUM ERROR
DRUM BIAS
IC206 (1/2) DRUM POWER AMP
Q470, 471 JITTER CANCEL
RP SWP (IC205 63)
LP/SP (Q240)
PAUSE (IC211 10)
GJ-1 BOARD
IC206 (1/2) CAPSTAN POWER AMP
CAPSTAN BIAS (IC215 1)
Q281, 282, 246
VC CONTROL
VC CONT
IC502 (1/4)
IC214 (1/2) ATF GAIN SW
SP/LP (IC001 50)
PAUSE (IC001 23)
IC210 3 REC/PB
IC210 18 (TP219) REC/PB
IC210 4 (TP214) REC/PB
IC701 22 PB
IC216 (1/3)
TP242 FH BIAS
IC219 (1/2) FH BIAS AMP
RV216 SP FHG
RV215 LP FHG
IC218
IC219 (1/2) SLOW/STEP FH COMPENSAT
SLOW + STEP
IC211 (1/3)
Q236 X-3 DRUM BIAS
Q239
SLOW (IC001 62)
STEP (IC001 24)
X-3 (IC003 15)
IC204
C FG (CN217 1)
MMS 2
MMR 2
TPS 2
RFCT
RF CT (IC210 8)
D208
IC220 (1/2)
ATF ERROR
CN012 4 ATF LOCK
TP240 ATF LOCK
M ATF LOCK
D233 TIME CONSTANT SWITCH
CUE + REV (SYSTEM CONTROL Q256)
IC205 29 REC/PB
IC205 (1/2) ATF PILOT, 4 HEAD LOGIC
TP209 PILOT
ATFO
FREQUECY DIVIDER
FREQUECY DIVIDER
4 HEAD LOGIC
H CMO
XSSH
XLSH
VI RF
YDEX
HH DL
HC HR
LP VR
LP PR
SP PR
RP RF
SP VR
AUTO
HCHM
CMPS
I VLK
V REC
JOG
TPSP
SEL 1 (IC002 64)
SEL 2 (IC002 1)
FIN
X201 5.85MHz
TP224 AUTO
TP225 HCHM
Q237
HCHGM (IC002 3)
LAMP (IC003 17)
TP205 HD
PCM
SV COMP SYNC (IC502 3)
HEAD OPEN (IC500 6)
D RF SWP (IC601 10)
V REC (Q054, 055)
JOG (IC001 9)
SP/LP (IC001 50)
D213
Q235
REEL DIR (IC001 2)
AFT SW (IC003 12)
SEL16 (IC002 2)
TP220 S AUTO
Q010
RP AFREC
Q226
Q211, Q226, 214, 218
AUTO LOGIC
AUTO (IC001 58)
DOD (IC001 63)
REEL SWING (IC001 12)
PAUSE (IC001 23)
SP/LP (IC001 50)
LP/SP (Q233)
SLOW (IC001 52)
SYSTEM CONTROL
IC004 (1/4)
SPV REC 2
SP VREC 1
RP SWP
TP227 A SW
ATF SWP (IC701 8)
RESET (TIMER CN013 3)
TP238 FH STEP
IC217
IC204 39 REC/PB

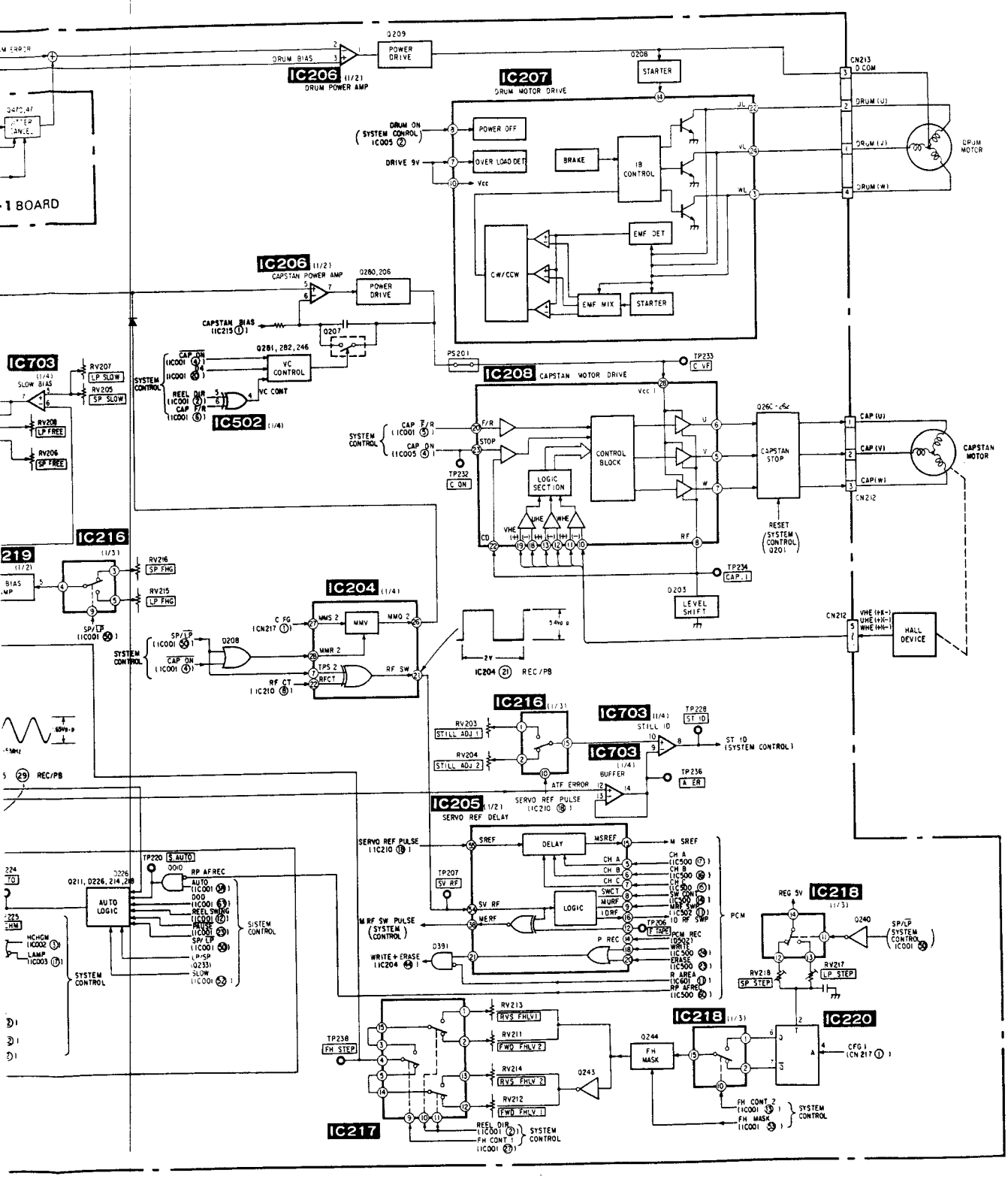
IC206 (1/2) DRUM POWER AMP
Q209 POWER DRIVE
DRUM BIAS
Q208 STARTER
IC207 DRUM MOTOR DRIVE
DRUM ON (SYSTEM CONROL) IC005 ②
POWER OFF
DRIVE 9V
OVER LOAD DET
BRAKE
IB CONTROL
CW/CCW
EMF DET
EMF MIX
STARTER
CN213 D COM
DRUM (U)
DRUM (V)
DRUM (W)
DRUM MOTOR
IC206 (1/2) CAPSTAN POWER AMP
Q280, 206 POWER DRIVE
CAPSTAN BIAS (IC215 ①)
Q207
Q281, 282, 246 VC CONTROL
VC CONT
SYSTEM CONTROL
IC502 (1/4)
IC703 (1/4) SLOW BIAS
RV207 LP SLOW
RV205 SP SLOW
RV208 LP FREE
RV206 SP FREE
PS201
TP233 C VF
IC208 CAPSTAN MOTOR DRIVE
CONTROL BLOCK
LOGIC SECTION
CAPSTAN STOP
RESET (SYSTEM CONTROL Q201)
CAP (U)
CAP (V)
CAP (W)
CAPSTAN MOTOR
CN212
TP232 C ON
TP234 CAP. 1
Q203 LEVEL SHIFT
IC216 (1/3)
RV216 SP FHG
RV215 LP FHG
IC204 (1/4)
MMV
MMS 2
MMQ 2
MMR 2
TPS 2
RFCT
RF SW
RF CT (IC210 ⑧)
Q208
IC204 ㉑ REC/PB
HALL DEVICE
IC216 (1/3)
RV203 STILL ADJ 1
RV204 STILL ADJ 2
IC703 (1/4) STILL ID
TP228 ST ID
ST ID (SYSTEM CONTROL)
IC703 (1/4) BUFFER
TP236 A ER
ATF ERROR
SERVO REF PULSE (IC210 ⑱)
IC205 (1/2) SERVO REF DELAY
SERVO REF PULSE (IC210 ⑱)
DELAY
LOGIC
TP207 SV RF
M RF SW PULSE (SYSTEM CONTROL)
WRITE + ERASE (IC204 ㊹)
D391
PCM
IC218 (1/3)
REG 5V
Q240
SP/LP (SYSTEM CONTROL IC001 ㊿)
RV218 SP STEP
RV217 LP STEP
IC218 (1/3)
IC220
Q244 FH MASK
CFG 1 (CN217 ①)
FH CONT 2 (IC001 ⑬)
FH MASK (IC001 ㉝)
SYSTEM CONTROL
TP238 FH STEP
RV213 RVS FHLV1
RV211 FWD FHLV 2
RV214 RVS FHLV 2
RV212 FWD FHLV 1
Q243
IC217
REEL DIR (IC001 ②)
FH CONT 1 (IC001 ㉓)
SYSTEM CONTROL
TP220 S. AUTO
Q211, Q226, 214, 218
AUTO LOGIC
RP AFREC
SYSTEM CONTROL

## 3-6. SYSTEM CONTROL BLOCK DIAGRAM

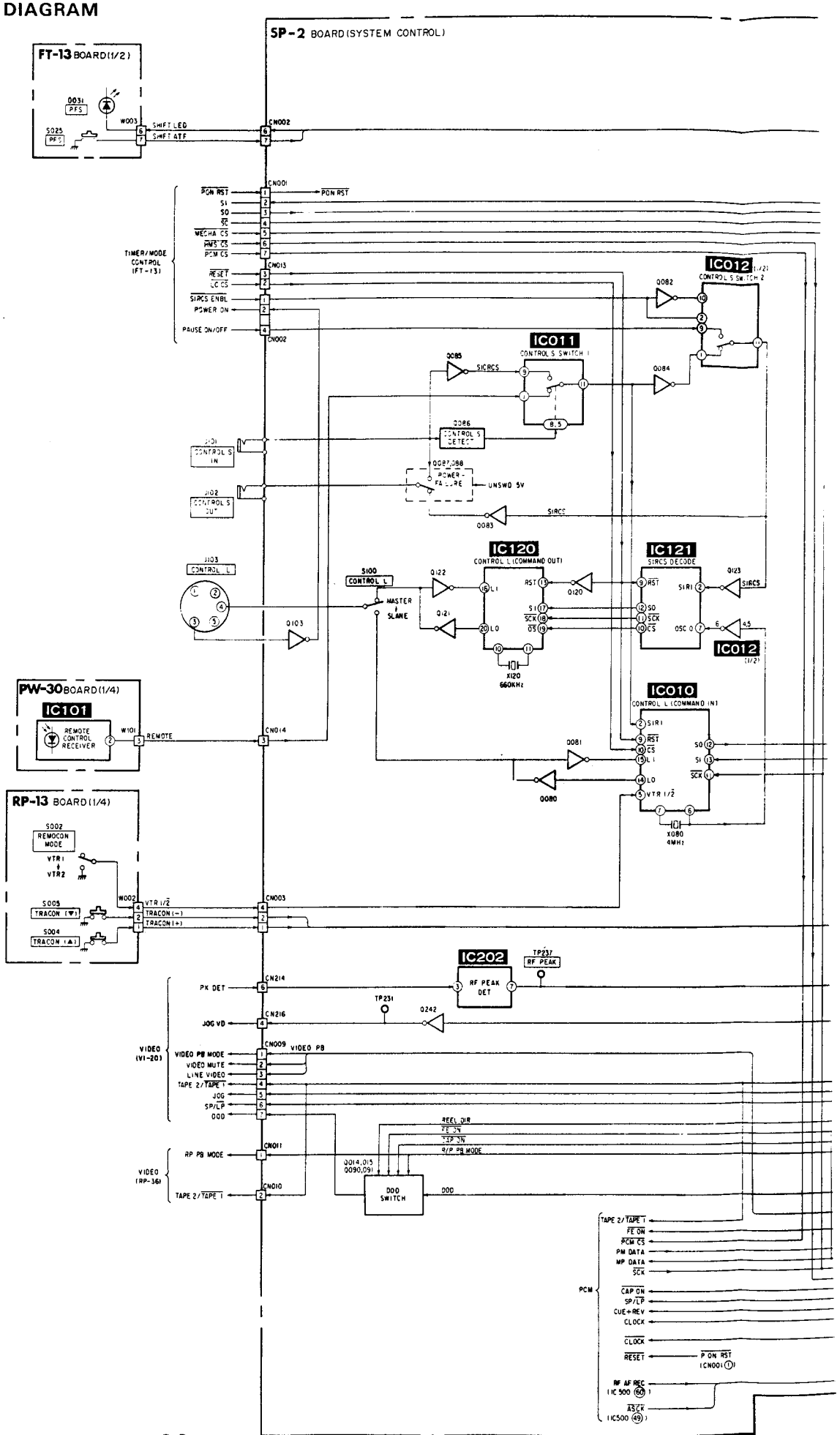

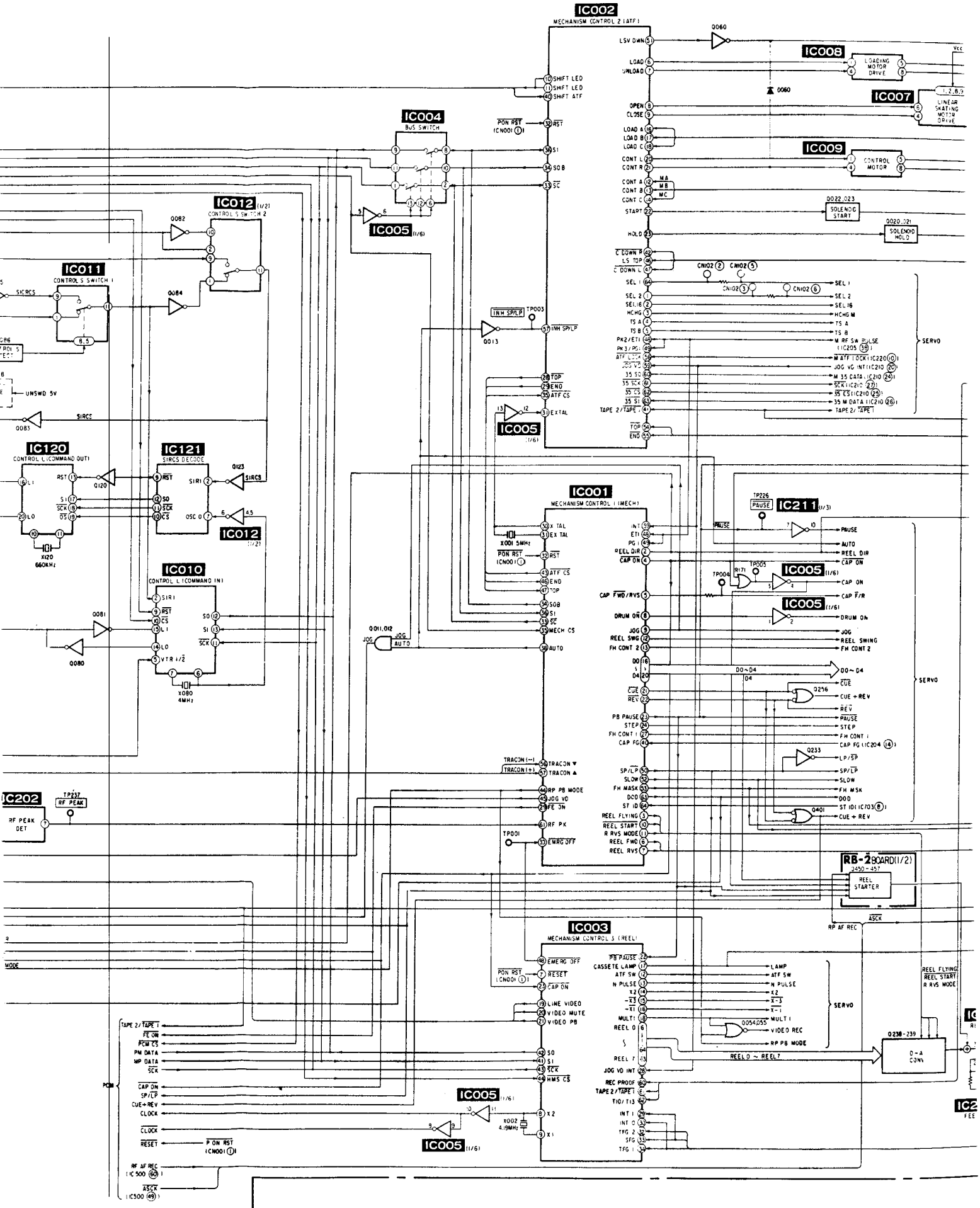
IC002
MECHANISM CONTROL 2 (ATF)
IC004
BUS SWITCH
IC005
IC012
CONTROL S SWITCH 2
IC011
CONTROL S SWITCH 1
IC120
CONTROL L (COMMAND OUT)
IC121
SIRCS DECODE
IC010
CONTROL L (COMMAND IN)
IC001
MECHANISM CONTROL 1 (MECH)
IC211
IC008
LOADING MOTOR DRIVE
IC007
LINEAR SKATING MOTOR DRIVE
IC009
CONTROL MOTOR
IC202
RF PEAK DET
RB-2 BOARD (1/2)
REEL STARTER
IC003
MECHANISM CONTROL 3 (REEL)
D-A CONV
SERVO

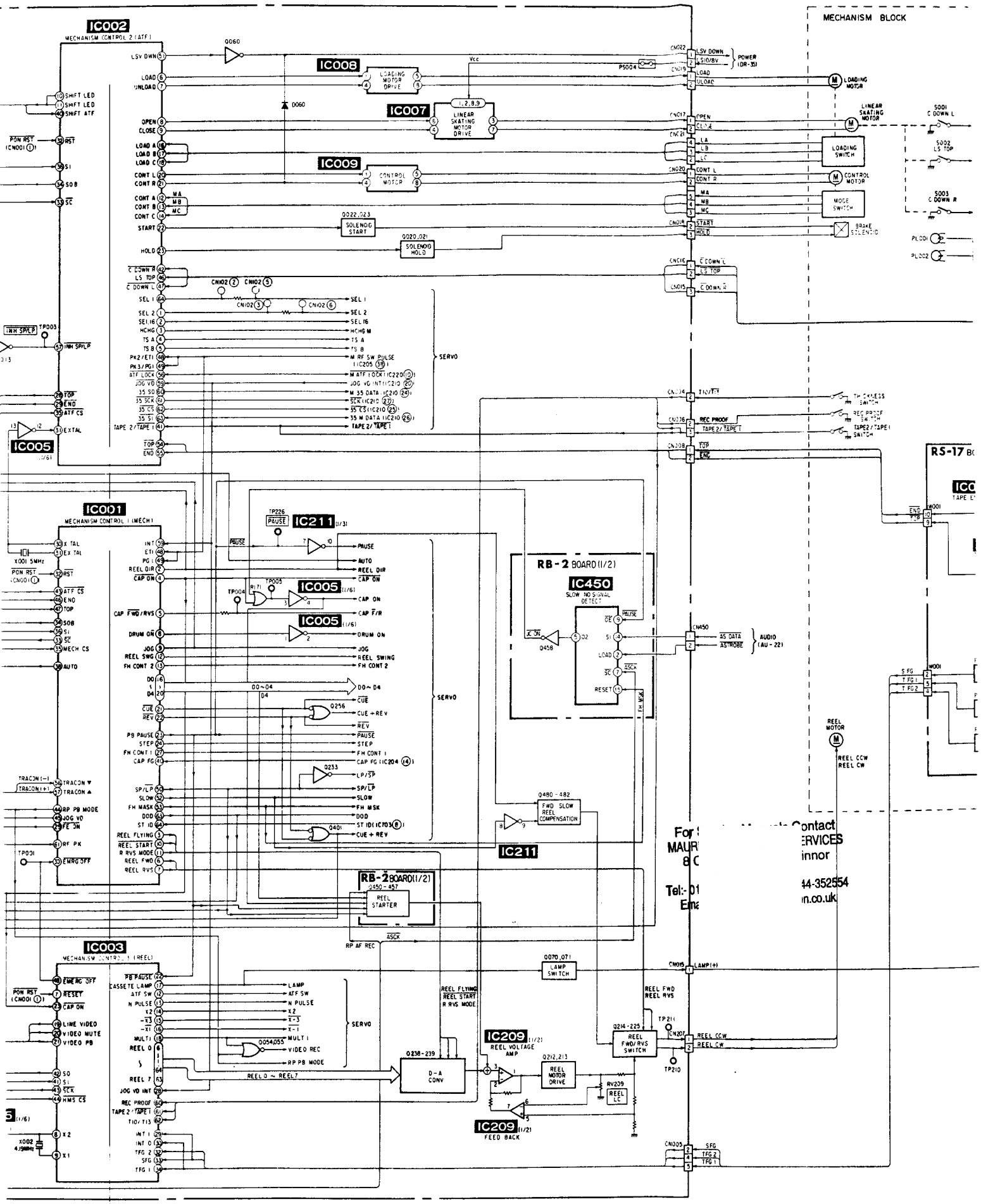


For S... ...Contact
MAUR... ...ERVICES
8 C... ...innor
Tel:-01... ...44-352554
Ema... ...in.co.uk

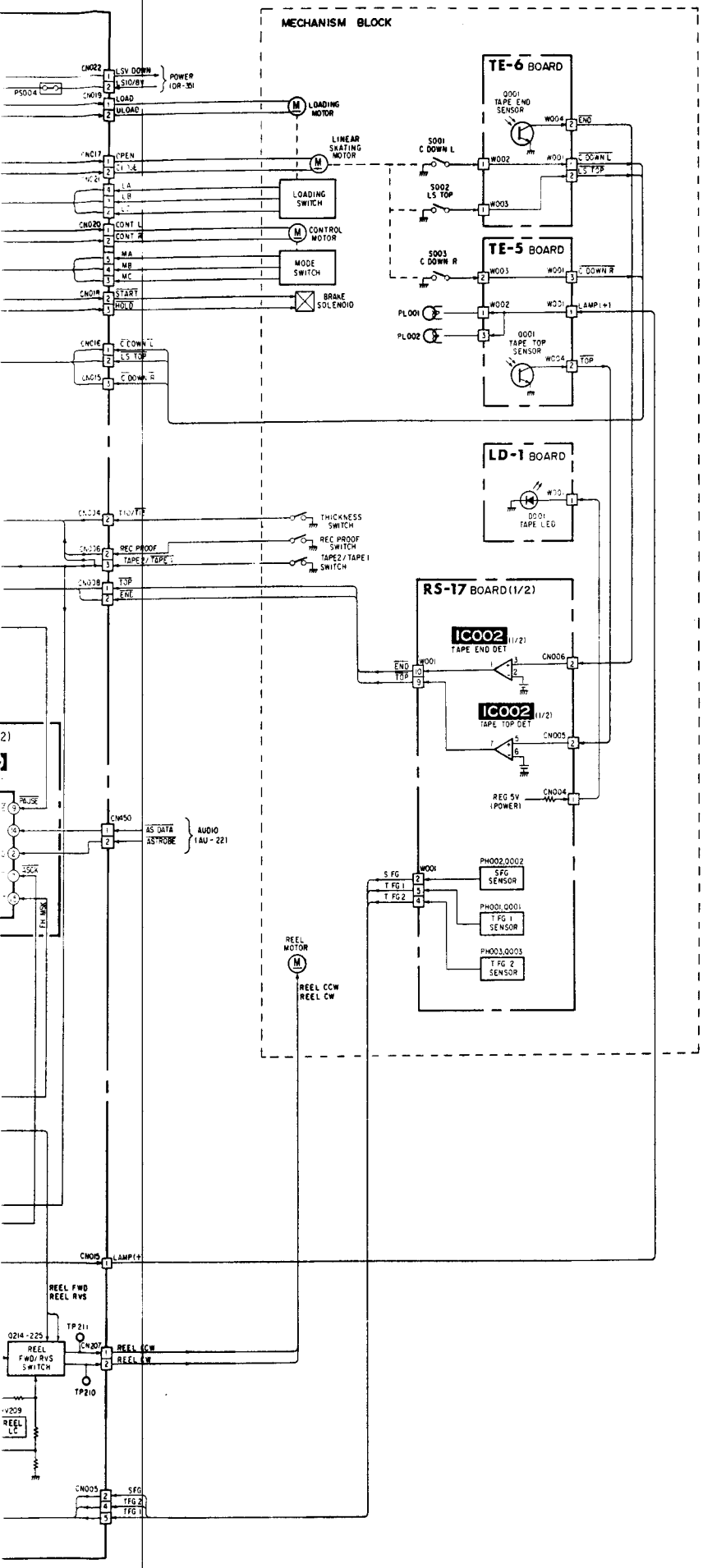
MECHANISM BLOCK
TE-6 BOARD
TE-5 BOARD
LD-1 BOARD
RS-17 BOARD(1/2)
IC002 (1/2) TAPE END DET
IC002 (1/2) TAPE TOP DET
LOADING MOTOR
LINEAR SKATING MOTOR
CONTROL MOTOR
LOADING SWITCH
MODE SWITCH
BRAKE SOLENOID
THICKNESS SWITCH
REC PROOF SWITCH
TAPE2/TAPE1 SWITCH
S001 C DOWN L
S002 LS TOP
S003 C DOWN R
0001 TAPE END SENSOR
0001 TAPE TOP SENSOR
0001 TAPE LED
PL001
PL002
REG 5V (POWER)
PH002,0002 SFG SENSOR
PH001,0001 TFG 1 SENSOR
PH003,0003 TFG 2 SENSOR
REEL MOTOR
REEL CCW
REEL CW
REEL FWD
REEL RVS
REEL FWD/RVS SWITCH
Q214-225
TP211
TP210
POWER (OR-35)
AUDIO (AU-221)

### 3-7. SYSTEM CONTROL – REC PAUSE BLOCK INTERFACE

| SIGNAL \ MODE | I/O | Pin No. | STOP | FF | REW | SEARCH | –SEARCH | REC | REC PAUSE | AF REC | AF REC PAUSE | PB | PB PAUSE | ×1 | –×1 | ×2 | –×2 | ×9 | –×9 | SLOW (1/5, 1/10) | SLOW (–1/5, –1/10) | CUE | REV |
|---|---|---|---|---|---|---|---|---|---|---|---|---|---|---|---|---|---|---|---|---|---|---|---|
| RP PB MODE | O | IC001 ㊹ Pin | H | H | H | H | H | L | L | H | H | H | H | H | H | H | H | H | H | H | H | H | H |
| VIDEO REC | O | Q054 collector | L | L | L | L | L | H | L | L | L | L | L | L | L | L | L | L | L | L | L | L | L |
| RP AF REC | O | IC500 ㊿ Pin | L | L | L | L | L | L | L | H | H | L | L | L | L | L | L | L | L | L | L | L | L |
| H CHG | O | IC002 ③ Pin | *1 | *1 | *1 | *1 | *1 | *1 | *1 | *1 | *2 | *1 | *2 | *1 | *2 | *2 | *2 | *2 | *2 | *2 | *2 | *2 | *2 |
| $\overline{\text{M FE ON}}$ | O | IC500 ① Pin | H | H | H | H | H | *3 | H | *2 | H | H | H | H | H | H | H | H | H | H | H | H | H |

*1 Be caused by Tape speed select
*2 Output pulse
*3 At "L" during the NORMAL or at output pulse during the MULTI

### 3-8. SYSTEM CONTROL – VIDEO BLOCK INTERFACE

| SIGNAL \ MODE | I/O | Pin No. | STOP | FF | REW | SEARCH | –SEARCH | REC | REC PAUSE | AF REC | AF REC PAUSE | PB | PB PAUSE | ×1 | –×1 | ×2 | –×2 | ×9 | –×9 | SLOW (1/5, 1/10) | SLOW (–1/5, –1/10) | CUE | REV |
|---|---|---|---|---|---|---|---|---|---|---|---|---|---|---|---|---|---|---|---|---|---|---|---|
| VIDEO PB | O | IC003 ㉑ Pin | L | L | L | L | L | L | L | H | H | H | H | H | H | H | H | H | H | H | H | H | H |
| VIDEO MUTE | O | IC003 ⑳ Pin | L | L | L | H | H | L | L | L | L | L | L | L | L | L | L | L | L | L | L | L | L |
| LINE VIDEO | O | IC003 ⑲ Pin | Be caused by input select | | | | | | | | | | | | | | | | | | | | |
| JOG | O | IC001 ⑨ Pin | L | L | L | L | L | L | L | H | H | L | H | H | H | H | H | H | H | H | H | H | H |
| DOD | O | IC001 ㊸ Pin | L | L | L | L | L | L | L | | | L | | | | | | | | | | | |
| TAPE 2/$\overline{\text{TAPE 1}}$ | O | CN009 ④ Pin | Be caused by cassette | | | | | | | | | | | | | | | | | | | | |
| SP/$\overline{\text{LP}}$ | O | IC001 ㊿ Pin | Be caused by Tape Speed Select | | | | | | | | | | | | | | | | | | | | |
| JOG VD | O | IC001 ㊺ Pin | NON | | | | | | | YES | | NON | YES | | | | | | | | | | |

### 3-9. SYSTEM CONTROL – CAPSTAN MOTOR BLOCK INTERFACE

| SIGNAL \ MODE | I/O | Pin No. | STOP | FF | REW | SEARCH | –SEARCH | REC | REC PAUSE | AF REC | AF REC PAUSE | PB | PB PAUSE | ×1 | –×1 | ×2 | –×2 | ×9 | –×9 | SLOW (1/5, 1/10) | SLOW (–1/5, –1/10) | CUE | REV |
|---|---|---|---|---|---|---|---|---|---|---|---|---|---|---|---|---|---|---|---|---|---|---|---|
| $\overline{\text{CAP ON}}$ | O | IC001 ④ Pin | H | H | H | L | L | L | H | L | H | L | H | L | L | L | L | L | L | *1 | *1 | L | L |
| CAP ON | O | IC005 ④ Pin | L | L | L | H | H | H | L | H | L | H | L | H | H | H | H | H | H | *1 | *1 | H | H |
| CAP $\overline{\text{FWD}}$/RVS | O | IC001 ⑤ Pin | L | L | L | L | H | L | L | L | L | L | L | L | H | L | H | L | H | *1 | *1 | L | H |
| D0-D4 | O | IC001 ⑯–⑳ Pin | "1" | "1" | "1" | *2 | *2 | "1" | "1" | "1" | "1" | "1" | "1" | "1" | "1" | "2" | "2" | "9" | "7" | "1" | "1" | "9" | "7" |
| $\overline{\text{CUE}}$ | O | IC001 ㉑ Pin | H | H | H | H | H | H | H | H | H | H | H | H | H | H | H | H | H | H | H | L | H |
| $\overline{\text{REV}}$ | O | IC001 ㉒ Pin | H | H | H | H | H | H | H | H | H | H | H | H | H | H | H | H | H | H | H | H | L |
| $\overline{\text{PB PAUSE}}$ | O | IC001 ㉓ Pin | H | H | H | H | H | H | H | H | L | H | L | H | H | H | H | H | H | L | L | H | H |
| $\overline{-\times 1}$ | O | IC003 ⑯ Pin | H | H | H | H | H | H | H | H | H | H | H | H | L | H | H | H | H | H | H | H | H |
| $\overline{-\times 3}$ | O | IC003 ⑮ Pin | H | H | H | H | H | H | H | H | H | H | H | H | H | H | L | H | H | H | H | H | H |

D4 MSB
D0 LSB
(decimal notati

*1 Output pulse
*2 PAL "18" – "17"  NTSC "25" – "24"

### 3-10. SYSTEM CONTROL — DRUM MOTOR INTERFACE

| SIGNAL | I/O | Pin No. | STOP | FF | REW | SEARCH | –SEARCH | REC | REC PAUSE | AF REC | AF REC PAUSE | PB | PB PAUSE | ×1 | –×1 | ×2 | –×2 | ×9 | –×9 | SLOW (1/5, 1/10) | SLOW (–1/5, –1/10) | CUE | REV |
|---|---|---|---|---|---|---|---|---|---|---|---|---|---|---|---|---|---|---|---|---|---|---|---|
| DRUM ON | O | IC001 ⑧ Pin | H | L | L | L | L | L | L | L | L | L | L | L | L | L | L | L | L | L | L | L | L |
| STEP | O | IC001 ㉔ Pin | L | L | L | L | L | L | L | L | L | L | L | L | L | L | L | L | L | *1 | *1 | L | L |
| FH CONT1 | O | IC001 ㉗ Pin | L | L | L | L | L | L | L | L | L | L | L | L | L | L | L | L | L | *1 | *1 | L | L |
| FH CONT2 | O | IC001 ⑬ Pin | L | L | L | L | L | L | L | L | L | L | L | L | L | L | L | L | L | *1 | *1 | L | L |
| SLOW | O | IC001 ㉜ Pin | L | L | L | L | L | L | L | L | L | L | L | L | L | L | L | L | L | H | H | L | L |
| FH MASK | O | IC001 ㉝ Pin | H | H | H | H | H | H | H | H | H | H | H | H | H | H | H | H | H | *1 | *1 | H | H |

*1 Output pulse

### 3-11. SYSTEM CONTROL — REEL MOTOR INTERFACE

| SIGNAL | I/O | Pin No. | STOP | FF | REW | SEARCH | –SEARCH | REC | REC PAUSE | AF REC | AF REC PAUSE | PB | PB PAUSE | ×1 | –×1 | ×2 | –×2 | ×9 | –×9 | SLOW (1/5, 1/10) | SLOW (–1/5, –1/10) | CUE | REV |
|---|---|---|---|---|---|---|---|---|---|---|---|---|---|---|---|---|---|---|---|---|---|---|---|
| REEL FWD | O | IC001 ⑥ Pin | L | H | L | H | L | H | L | H | L | H | L | H | L | H | L | H | L | *1 | *1 | H | L |
| REEL RVS | O | IC001 ⑦ Pin | L | L | H | L | H | L | L | L | L | L | L | L | H | L | H | L | H | *1 | *1 | L | H |
| DOD | O | IC001 ㊸ Pin | H/L | L | H | L | H | L | H | H | L | L | H/L | L | H | L | H | H | H | L | H | H | H |
| REEL DIR | O | IC001 ② Pin | H/L | L | H | L | H | L | H | L | L | L | H/L | L | H | L | H | L | H | L | H | L | H |
| REEL FLYING | O | IC001 ③ Pin | L | L | L | L | L | L | L | L | L | L | L | L | L | L | L | L | L | L | L | L | L |
| REEL START | O | IC001 ⑩ Pin | H | H | H | H | H | H | H | H | H | H | H | H | H | H | H | H | H | H | H | H | H |
| R RVS MODE | O | IC001 ⑪ Pin | L | L | L | L | L | L | L | L | L | L | L | L | L | L | L | L | L | L | L | L | L |
| REEL SWG | O | IC001 ⑫ Pin | L | L | L | L | L | L | L | L | L | L | L | L | L | L | L | L | L | L | L | L | L |
| REEL 0~7 | O | IC003 ①~⑥, ㊸, ㊹ Pin | "70" | "96" | "96" | "A6" | "9C" | "54" | "54" | "54" | "54" | "54" | "70" | "54" | *2 | "70" | *2 | *3 | *3 | "70" | *4 | *3 | *3 |

REEL 7 MSB
REEL 0 LSB
(BCD Code)

*1 Output pulse
*2 Be caused by NTSC/PAL, REMAIN
*3 Be caused by NTSC/PAL, SP/LP
*4 Be caused by NTSC/PAL

### 3-12. SYSTEM CONTROL — ATF SERVO BLOCK INTERFACE

| SIGNAL | I/O | Pin No. | STOP | FF | REW | SEARCH | –SEARCH | REC | REC PAUSE | AF REC | AF REC PAUSE | PB | PB PAUSE | ×1 | –×1 | ×2 | –×2 | ×9 | –×9 | SLOW (1/5, 1/10) | SLOW (–1/5, –1/10) | CUE | REV |
|---|---|---|---|---|---|---|---|---|---|---|---|---|---|---|---|---|---|---|---|---|---|---|---|
| ATF SW | O | IC003 ⑫ Pin | L | L | L | L | L | L | L | L | *1 | L | *1 | L | L | L | L | L | L | *1 | *1 | L | L |
| SEL16 | O | IC002 ② Pin | L | L | L | L | L | *2 | L | *2 | L | *2 | L | *2 | *2 | *2 | *2 | *2 | *2 | *2 | *2 | *2 | *2 |
| TSA | O | IC002 ④ Pin | L | L | L | H | H | L | L | *2 | L | *2 | L | *2 | *2 | *2 | *2 | L | L | L | L | L | L |
| TSB | O | IC002 ⑤ Pin | L | L | L | L | L | L | L | *2 | L | *2 | L | *2 | *2 | *2 | *2 | L | L | L | L | L | L |
| MULTI | O | IC003 ⑱ Pin | Be caused by NORMAL/MULTI select switch and Tape state | | | | | | | | | | | | | | | | | | | | |
| N PULSE | O | IC003 ⑬ Pin | L | L | L | L | L | L | L | L | *1 | L | *1 | L | L | L | L | L | L | *1 | *1 | L | L |
| TAPE 2/TAPE 1 | O | Q227 ⑧ | Be caused by CASSETTE | | | | | | | | | | | | | | | | | | | | |
| RP PB MODE | O | IC001 ㊹ Pin | H | H | H | H | H | L | L | H | H | H | H | H | H | H | H | H | H | H | H | H | H |
| SEL 1 | O | IC002 ㊸ Pin | H | H | H | H | H | *2 | *2 | *2 | *2 | *2 | *2 | *2 | *2 | *2 | *2 | *2 | *2 | *2 | *2 | *2 | *2 |
| SEL 2 | O | IC002 ① Pin | H | H | H | H | H | *2 | *2 | *2 | *2 | *2 | *2 | *2 | *2 | *2 | *2 | *2 | *2 | *2 | *2 | *2 | *2 |
| M RF SW PULSE | I | IC002 ㊽, ㊾ Pin | H/L | FIELD synchronized pulse | | | | | | | | | | | | | | | | | | | |
| JOG VD INT | I | IC001, 002 ㊾ Pin | L | Input pulse | | | | | | | | | | | | | | | | | | | |

*1 Output pulse
*2 Be caused by ATF sequence

### 3-13. SYSTEM CONTROL – STILL BLOCK INTERFACE

| SIGNAL \ MODE | I/O | Pin No. | STOP | FF | REW | SEARCH | –SEARCH | REC | REC PAUSE | AF REC | AF REC PAUSE | PB | PB PAUSE | ×1 | –×1 | ×2 | –×2 | ×9 | –×9 | SLOW (1/5, 1/10) | SLOW (–1/5, –1/10) | CUE | REV |
|---|---|---|---|---|---|---|---|---|---|---|---|---|---|---|---|---|---|---|---|---|---|---|---|
| RF PK | I | IC001 ⑥① Pin | Unsettled | | | | | | | | | | | | | | | | | | | | |
| STID | I | IC001 ⑥④ Pin | Unsettled | | | | | | | | | | | | | | | | | | | | |

### 3-14. SYSTEM CONTROL – HEAD CHANGE BLOCK INTERFACE

| SIGNAL \ MODE | I/O | Pin No. | STOP | FF | REW | SEARCH | –SEARCH | REC | REC PAUSE | AF REC | AF REC PAUSE | PB | PB PAUSE | ×1 | –×1 | ×2 | –×2 | ×9 | –×9 | SLOW (1/5, 1/10) | SLOW (–1/5, –1/10) | CUE | REV |
|---|---|---|---|---|---|---|---|---|---|---|---|---|---|---|---|---|---|---|---|---|---|---|---|
| AUTO | O | IC001 ③⑧ Pin | L | L | L | L | L | L | L | L | L | L | L | L | L | L | L | L | L | *1 | *1 | L | L |
| LAMP | O | IC003 ① Pin | H | H | H | H | H | H | H | H | H | H | H | H | H | H | H | H | H | H | H | H | H |
| SP/$\overline{LP}$ | O | IC001 ⑤⓪ Pin | Be caused by speed serect | | | | | | | | | | | | | | | | | | | | |

*1 Be caused by SP/LP

### 3-15. SYSTEM CONTROL – AND OTHERS BLOCK INTERFACE

| SIGNAL \ MODE | I/O | Pin No. | STOP | FF | REW | SEARCH | –SEARCH | REC | REC PAUSE | AF REC | AF REC PAUSE | PB | PB PAUSE | ×1 | –×1 | ×2 | –×2 | ×9 | –×9 | SLOW (1/5, 1/10) | SLOW (–1/5, –1/10) | CUE | REV |
|---|---|---|---|---|---|---|---|---|---|---|---|---|---|---|---|---|---|---|---|---|---|---|---|
| $\overline{M\ ATF\ LOCK}$ | O | IC002 ⑤⑥ Pin | Unsettled | | | | | | | | | | | | | | | | | | | | |
| CAP FG | I | IC001 ④⓪ Pin | Unsettled | | | *1 | *1 | *1 | Unsettled | *1 | Unsettled | *1 | Unsettled | *1 | *1 | *1 | *1 | *1 | *1 | *1 | *1 | *1 | *1 |
| JOG | O | IC001 ⑨ Pin | L | L | L | L | L | L | L | H | H | L | H | H | H | H | H | H | H | H | H | H | H |

*1 Input pulse

### 3-16. SYSTEM CONTROL – AFM AUDIO BLOCK INTERFACE

| SIGNAL \ MODE | I/O | Pin No. | STOP | FF | REW | SEARCH | –SEARCH | REC | REC PAUSE | AF REC | AF REC PAUSE | PB | PB PAUSE | ×1 | –×1 | ×2 | –×2 | ×9 | –×9 | SLOW (1/5, 1/10) | SLOW (–1/5, –1/10) | CUE | REV |
|---|---|---|---|---|---|---|---|---|---|---|---|---|---|---|---|---|---|---|---|---|---|---|---|
| IN SEL A | O | IC101 ⑤ Pin | | | | | | | | | | | | | | | | | | | | | |
| IN SEL B | O | IC101 ⑥ Pin | Be caused by input select (TUNER/LINE/SIMUL and yes or no of microphone input) | | | | | | | | | | | | | | | | | | | | |
| AF SEL | O | IC101 ㉖ Pin | | | | | | | | | | | | | | | | | | | | | |
| OUT SEL A | O | IC101 ③ Pin | | | | | | | | | | | | | | | | | | | | | |
| OUT SEL B | O | IC101 ② Pin | Be caused by output select (receive a signal or STEREO/MONO/BILINGAL of playback ID and monitor switch) | | | | | | | | | | | | | | | | | | | | |
| OUT SEL C | O | IC101 ① Pin | | | | | | | | | | | | | | | | | | | | | |
| SP/$\overline{LP}$ | O | IC101 ㉗ Pin | Be caused by speed select | | | | | | | | | | | | | | | | | | | | |
| $\overline{AUDIO\ MUTE}$ | O | IC101 ④ Pin | H | H | H | L | L | H | H | H | H | H | L | H | H | H | H | H | H | H | H | H | H |
| AF PB/$\overline{REC}$ | O | IC101 ㉕ Pin | L | L | L | H | H | L | L | | L | H | H | H | H | H | H | H | H | H | H | H | H |
| REC MUTE | O | IC101 ㉔ Pin | H | H | H | H | H | L | H | L | H | H | H | H | H | H | H | H | H | H | H | H | H |
| AFM MUTE 2 | O | IC101 ㉓ Pin | *1 | *1 | *1 | H | H | *1 | *1 | H | H | *2 | H | H | H | *2 | H | H | H | H | H | H | H |
| AFM MUTE 1 | O | IC101 ㉒ Pin | *1 | *1 | *1 | H | H | *1 | *1 | H | H | *2 | H | H | H | *2 | H | H | H | H | H | H | H |
| ×2 | O | IC101 ⑳ Pin | L | L | L | L | L | L | L | L | L | L | L | L | L | H | L | L | L | L | L | L | L |

*1 Be caused by on the air classify of STEREO/MONO/BILINGUAL and monitor switch
*2 Be caused by Tape ID and monitor switch

For Service Mar

### 3-17. SYSTEM CONTROL – PCM AUDIO BLOCK INTERFACE

| SIGNAL \ MODE | I/O | Pin No. | STOP | FF | REW | SEARCH | –SEARCH | REC | REC PAUSE | AF REC | AF REC PAUSE | PB | PB PAUSE | ×1 | –×1 | ×2 | –×2 | ×9 | –×9 | SLOW (1/5, 1/10) | SLOW (–1/5, –1/10) | CUE | REV |
|---|---|---|---|---|---|---|---|---|---|---|---|---|---|---|---|---|---|---|---|---|---|---|---|
| PCM ACT | I | IC500 ㊻ Pin | L | L | L | Unsettled | | H | L | H | L | Unsettled | | | | | | | | | | | |
| AF REC | O | IC500 ㊽ Pin | L | L | L | L | L | L | L | H | L | L | L | L | L | L | L | L | L | L | L | L | L |
| PCM PB/$\overline{REC}$ | O | IC500 ㊷ Pin | H | H | H | H | H | L | H | L | H | H | H | H | H | H | H | H | H | H | H | H | H |
| LOCK | O | IC500 ㉒ Pin | L | L | L | H | H | H | L | H | H | H | H | H | H | H | H | H | H | H | H | H | H |
| $\overline{FOH}$ | O | IC500 ㊸ Pin | H | H | H | L | H | H | H | H | H | H | H | H | H | H | H | H | H | H | H | H | H |
| FOL | O | IC500 ㊹ Pin | L | L | L | L | H | L | L | L | L | L | L | L | L | L | L | L | L | L | L | L | L |

### 3-18. SYSTEM CONTROL – MD BLOCK INTERFACE

| SIGNAL \ MODE | I/O | Pin No. | STOP | FF | REW | SEARCH | –SEARCH | REC | REC PAUSE | AF REC | AF REC PAUSE | PB | PB PAUSE | ×1 | –×1 | ×2 | –×2 | ×9 | –×9 | SLOW (1/5, 1/10) | SLOW (–1/5, –1/10) | CUE | REV |
|---|---|---|---|---|---|---|---|---|---|---|---|---|---|---|---|---|---|---|---|---|---|---|---|
| LAMP | O | IC003 ⑰ Pin | H | H | H | H | H | H | H | H | H | H | H | H | H | H | H | H | H | H | H | H | H |
| $\overline{CDOWNL}$ | I | IC002 ㊼ Pin | L | L | L | L | L | L | L | L | L | L | L | L | L | L | L | L | L | L | L | L | L |
| $\overline{CDOWNR}$ | I | IC002 ㊷ Pin | L | L | L | L | L | L | L | L | L | L | L | L | L | L | L | L | L | L | L | L | L |
| $\overline{LSTOP}$ | I | IC002 ㊽ Pin | H | H | H | H | H | H | H | H | H | H | H | H | H | H | H | H | H | H | H | H | H |
| OPEN | O | IC003 ⑧ Pin | L | L | L | L | L | L | L | L | L | L | L | L | L | L | L | L | L | L | L | L | L |
| CLOSE | O | IC002 ⑨ Pin | L | L | L | L | L | L | L | L | L | L | L | L | L | L | L | L | L | L | L | L | L |
| LOAD | O | IC002 ⑥ Pin | L | L | L | L | L | L | L | L | L | L | L | L | L | L | L | L | L | L | L | L | L |
| UNLOAD | O | IC002 ⑦ Pin | L | L | L | L | L | L | L | L | L | L | L | L | L | L | L | L | L | L | L | L | L |
| LA ~ LC | I | IC003 ⑯⑰⑱ Pin | "3" | "3" | "3" | "3" | "3" | "3" | "3" | "3" | "3" | "3" | "3" | "3" | "3" | "3" | "3" | "3" | "3" | "3" | "3" | "3" | "3" |
| CONTL | O | IC002 ⑳ Pin | L | L | L | L | L | L | L | L | L | L | L | L | L | L | L | L | L | L | L | L | L |
| CONTR | O | IC002 ㉑ Pin | L | L | L | L | L | L | L | L | L | L | L | L | L | L | L | L | L | L | L | L | L |
| MA ~ MC | I | IC002 ⑫⑬⑭ Pin | "3" | "6" | "6" | "1" | "1" | "1" | "1" | "1" | "1" | "1" | "1" | "1" | "1" | "1" | "1" | "1" | "1" | "1" | "1" | "1" | "1" |
| $\overline{START}$ | O | IC002 ㉓ Pin | H | H | H | H | H | H | H | H | H | H | H | H | H | H | H | H | H | H | H | H | H |
| $\overline{HOLD}$ | O | IC002 ㉒ Pin | H | L | L | H | H | H | H | H | H | H | H | H | H | H | H | H | H | H | H | H | H |
| RECPROOF | I | IC003 ㊿ Pin | | | | | | | | | | | | | | | | | | | | | |
| TAPE 2/$\overline{TAPE\ 1}$ | I | IC003 ㊶ Pin | Be caused be Tape state | | | | | | | | | | | | | | | | | | | | |
| T10/$\overline{T13}$ | I | IC003 ㊷ Pin | | | | | | | | | | | | | | | | | | | | | |
| TFG1 | I | IC003 ㉚ ㉞ Pin | Unsettled | *1 | *1 | *1 | *1 | *1 | Unsettled | *1 | Unsettled | *1 | Unsettled | *1 | *1 | *1 | *1 | *1 | *1 | *1 | *1 | *1 | *1 |
| TFG2 | I | IC003 ㉜ Pin | Unsettled | *1 | *1 | *1 | *1 | *1 | Unstettled | *1 | Unsettled | *1 | Unsettled | *1 | *1 | *1 | *1 | *1 | *1 | *1 | *1 | *1 | *1 |
| $\overline{TOP}$ | I | IC002 ㊹ Pin | H | H | H | H | H | H | H | H | H | H | H | H | H | H | H | H | H | H | H | H | H |
| $\overline{END}$ | I | IC002 ㊺ Pin | *2 | L | L | L | L | L | L | L | L | L | L | L | L | L | L | L | L | L | L | L | L |
| SFG | I | IC003 ㉙ ㉝ Pin | Unsettled | *1 | *1 | *1 | *1 | *1 | Unsettled | *1 | Unsettled | *1 | Unsettled | *1 | *1 | *1 | *1 | *1 | *1 | *1 | *1 | *1 | *1 |

*1 The pulse is participate of reel rotations
*2 Normal. . . at "H", but at "L" during the Tape end

## 3-19. TUNER BLOCK DIAGRAM

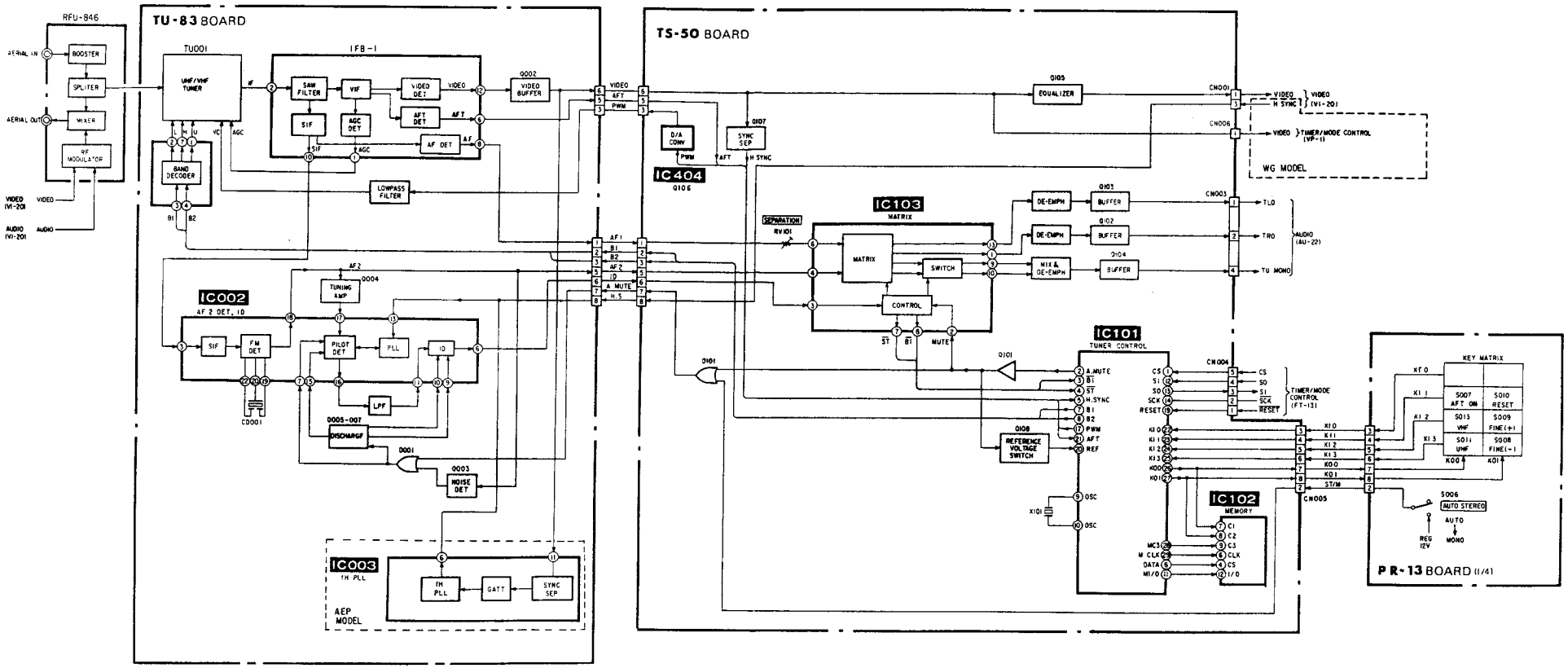

## 3-20. AUDIO BLOCK DIAGRAM

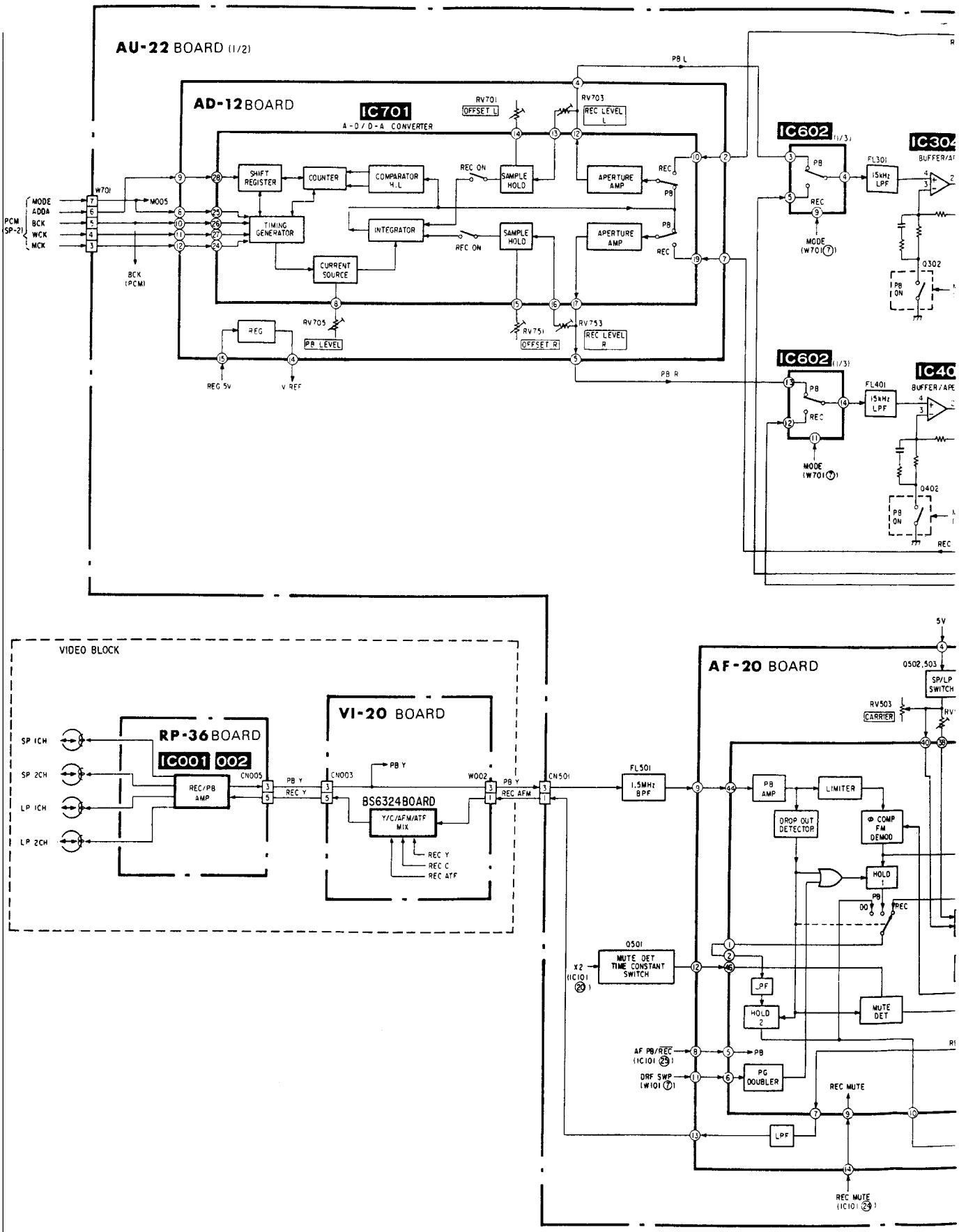

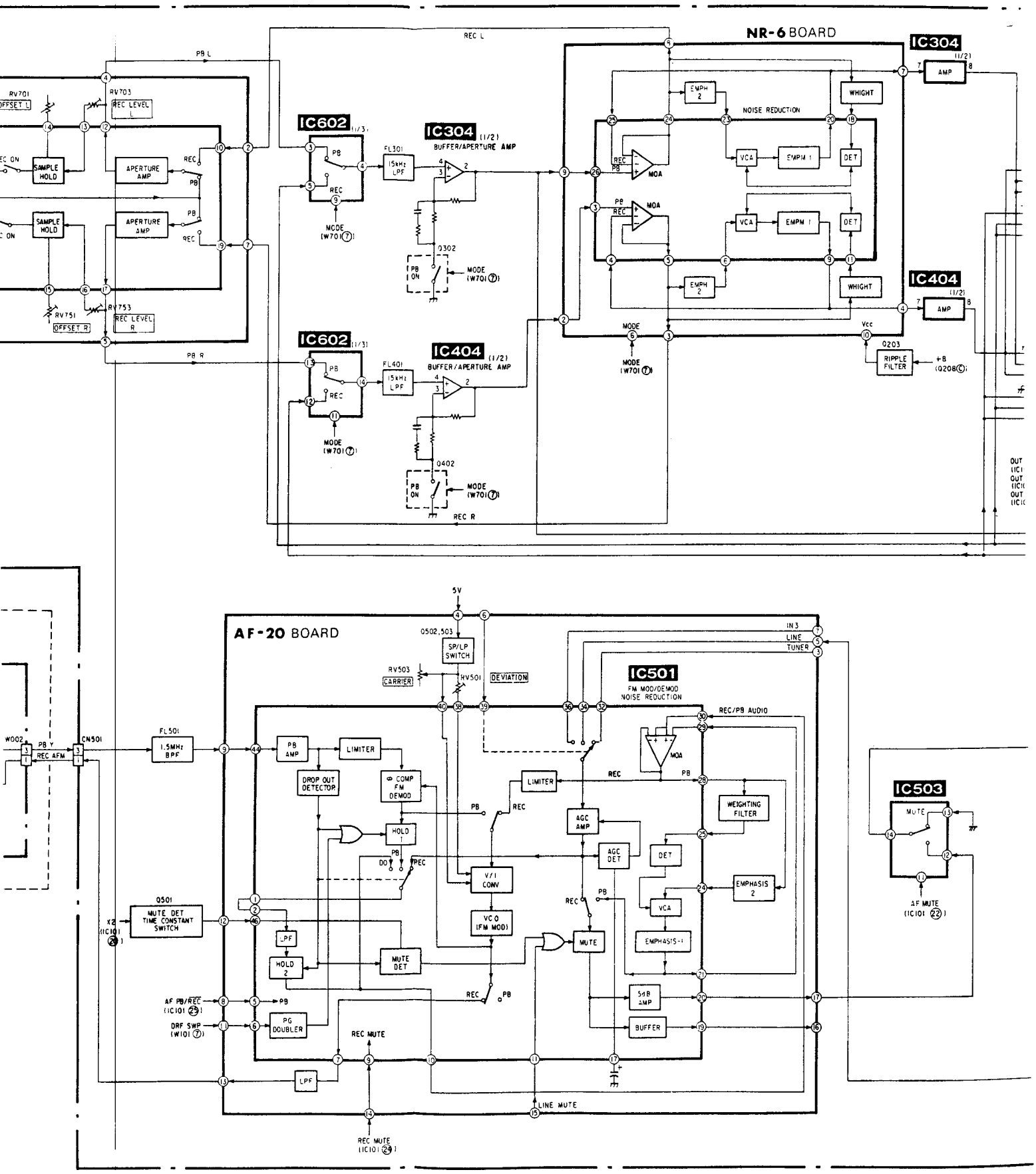
NR-6 BOARD
IC304
IC404
IC602
IC304 (1/2)
BUFFER/APERTURE AMP
IC404 (1/2)
BUFFER/APERTURE AMP
IC602 (1/3)
IC602 (1/3)
NOISE REDUCTION
EMPH 2
WHIGHT
VCA
EMPM 1
DET
MOA
AMP
RIPPLE FILTER
+B (Q208C)
SAMPLE HOLD
APERTURE AMP
REC LEVEL L
REC LEVEL R
OFFSET L
OFFSET R
REC L
REC R
PB L
PB R
MODE (W701 7)
FL301 15kHz LPF
FL401 15kHz LPF
Q302
Q402
PB ON
AF-20 BOARD
IC501
FM MOD/DEMOD NOISE REDUCTION
IC503
MUTE
AF MUTE (IC101 22)
SP/LP SWITCH
CARRIER
DEVIATION
IN 3
LINE
TUNER
REC/PB AUDIO
FL501 1.5MHz BPF
PB AMP
LIMITER
DROP OUT DETECTOR
COMP FM DEMOD
HOLD 1
V/I CONV
VCO (FM MOD)
AGC AMP
AGC DET
WEIGHTING FILTER
EMPHASIS 2
EMPHASIS-1
5dB AMP
BUFFER
MUTE
MUTE DET
MUTE DET TIME CONSTANT SWITCH
Q501
LPF
HOLD 2
PG DOUBLER
AF PB/REC (IC101 25)
DRF SWP (W101 7)
REC MUTE
LINE MUTE
REC MUTE (IC101 24)
CN501
REC AFM
5V

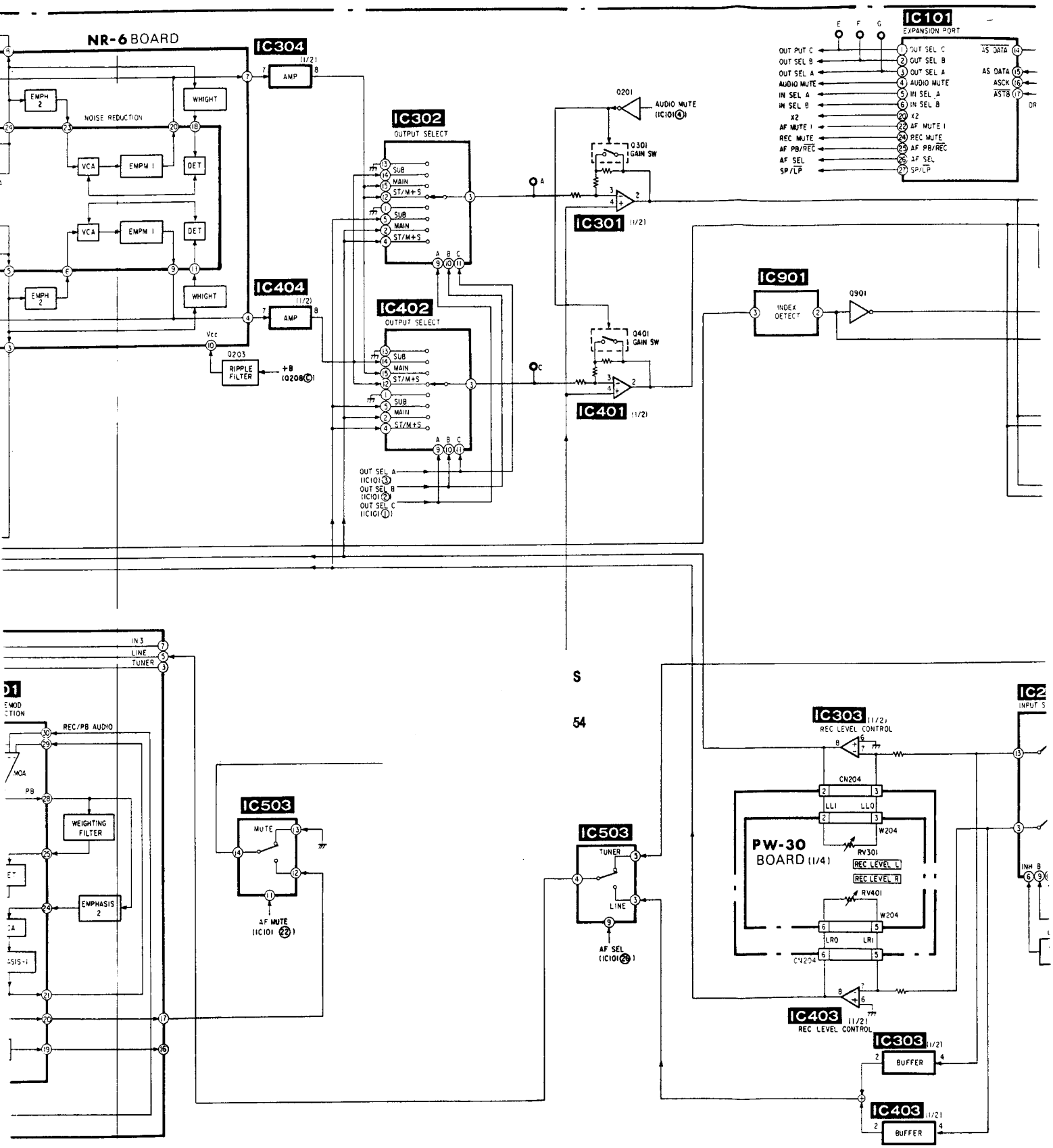
NR-6 BOARD
IC304
AMP
EMPH 2
WHIGHT
NOISE REDUCTION
VCA
EMPH 1
DET
IC404
RIPPLE FILTER
Q203
+B (Q208©)
IC302
OUTPUT SELECT
SUB
MAIN
ST/M+S
IC402
Q201
AUDIO MUTE (IC101④)
Q301 GAIN SW
IC301
Q401 GAIN SW
IC401
IC101
EXPANSION PORT
OUT PUT C
OUT SEL B
OUT SEL A
AUDIO MUTE
IN SEL A
IN SEL B
X2
AF MUTE I
REC MUTE
AF PB/REC
AF SEL
SP/LP
AS DATA
ASCK
ASTB
IC901
INDEX DETECT
Q901
IN 3
LINE
TUNER
REC/PB AUDIO
WEIGHTING FILTER
EMPHASIS 2
IC503
MUTE
AF MUTE (IC101 ㉒)
AF SEL (IC101 ㉖)
IC303
REC LEVEL CONTROL
CN204
LLI
LLO
LRO
LRI
W204
RV301
RV401
REC LEVEL L
REC LEVEL R
PW-30 BOARD (1/4)
IC403
BUFFER

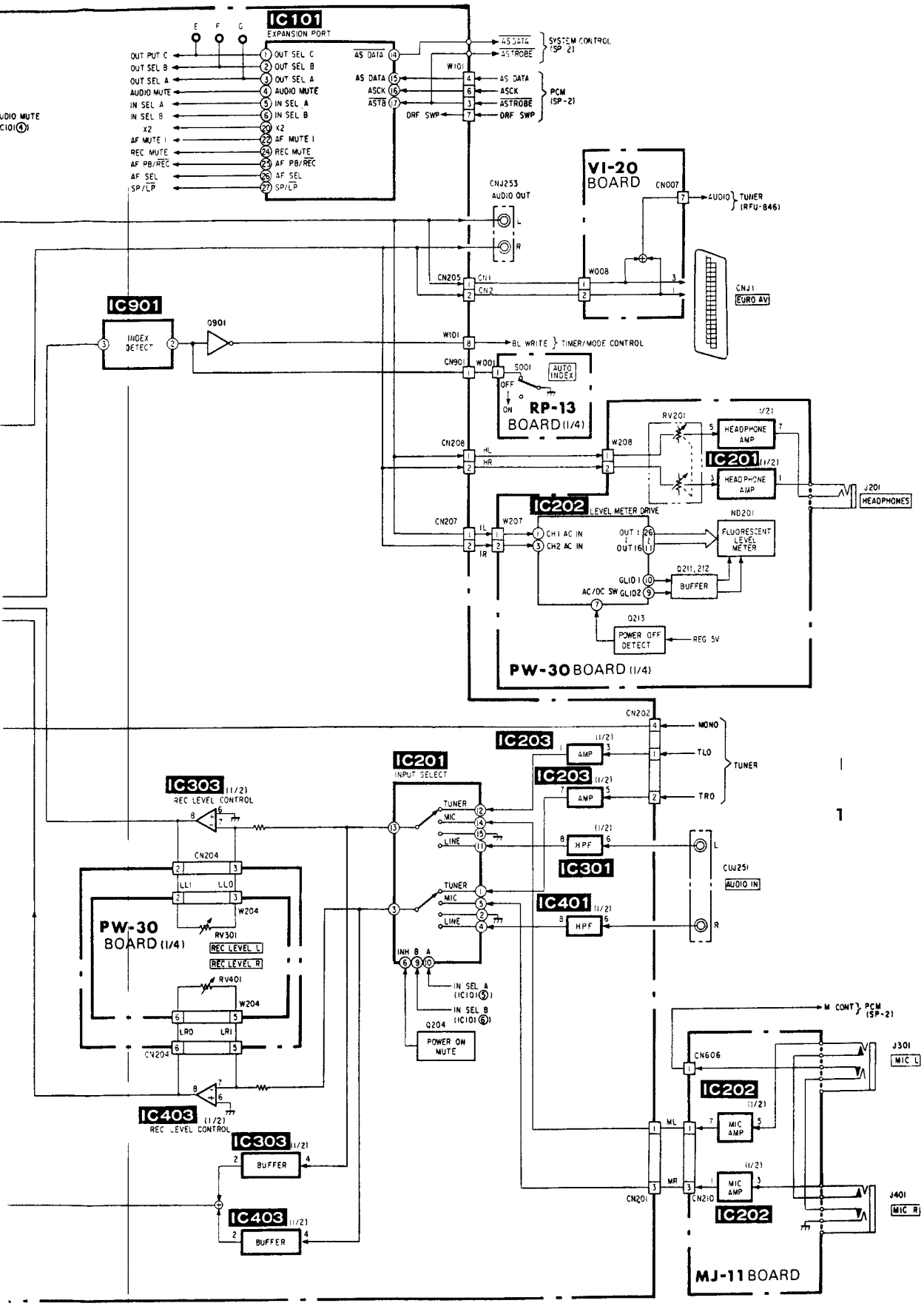
IC101
EXPANSION PORT
OUT PUT C
OUT SEL B
OUT SEL A
AUDIO MUTE
IN SEL A
IN SEL B
X2
AF MUTE I
REC MUTE
AF PB/REC
AF SEL
SP/LP
AS DATA
ASTB
ORF SWP
SYSTEM CONTROL (SP-2)
PCM (SP-2)
VI-20 BOARD
CNJ253 AUDIO OUT
CN007
AUDIO
TUNER (RFU-846)
CNJ1 EURO AV
IC901
INDEX DETECT
Q901
BL WRITE
TIMER/MODE CONTROL
AUTO INDEX
RP-13 BOARD (1/4)
HEADPHONE AMP
IC201 (1/2)
J201 HEADPHONES
IC202 LEVEL METER DRIVE
FLUORESCENT LEVEL METER
BUFFER
POWER OFF DETECT
REG 5V
PW-30 BOARD (1/4)
IC203
MONO
TLO
TRO
TUNER
IC303 (1/2) REC LEVEL CONTROL
IC201 INPUT SELECT
TUNER
MIC
LINE
HPF
IC301
IC401
CNJ251 AUDIO IN
PW-30 BOARD (1/4)
REC LEVEL L
REC LEVEL R
POWER ON MUTE
IC403 (1/2) REC LEVEL CONTROL
IC303 (1/2) BUFFER
IC403 (1/2) BUFFER
M CONT
PCM (SP-2)
J301 MIC L
J401 MIC R
IC202 (1/2) MIC AMP
MJ-11 BOARD

## 3-21. PCM AUDIO BLOCK DIAGRAM

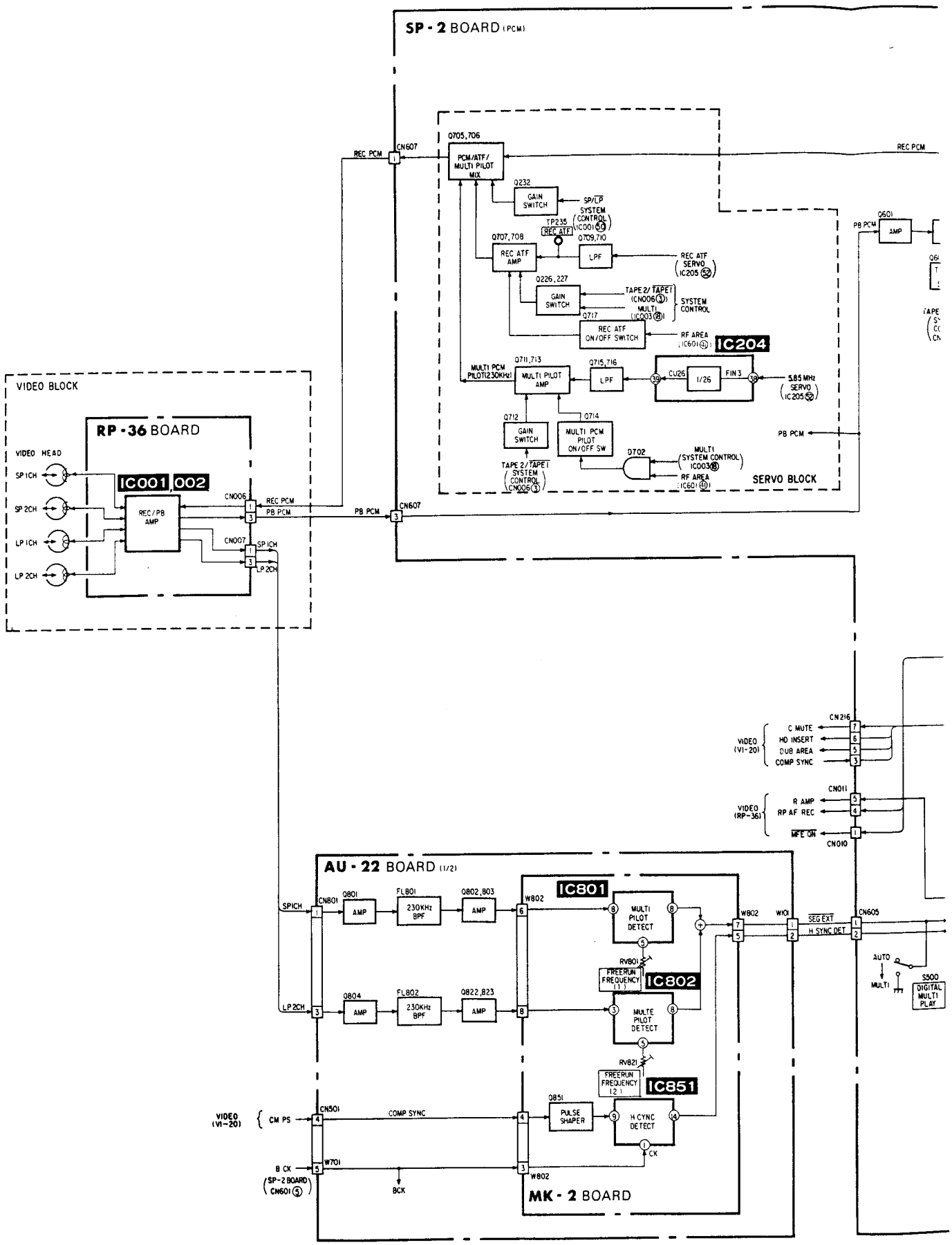

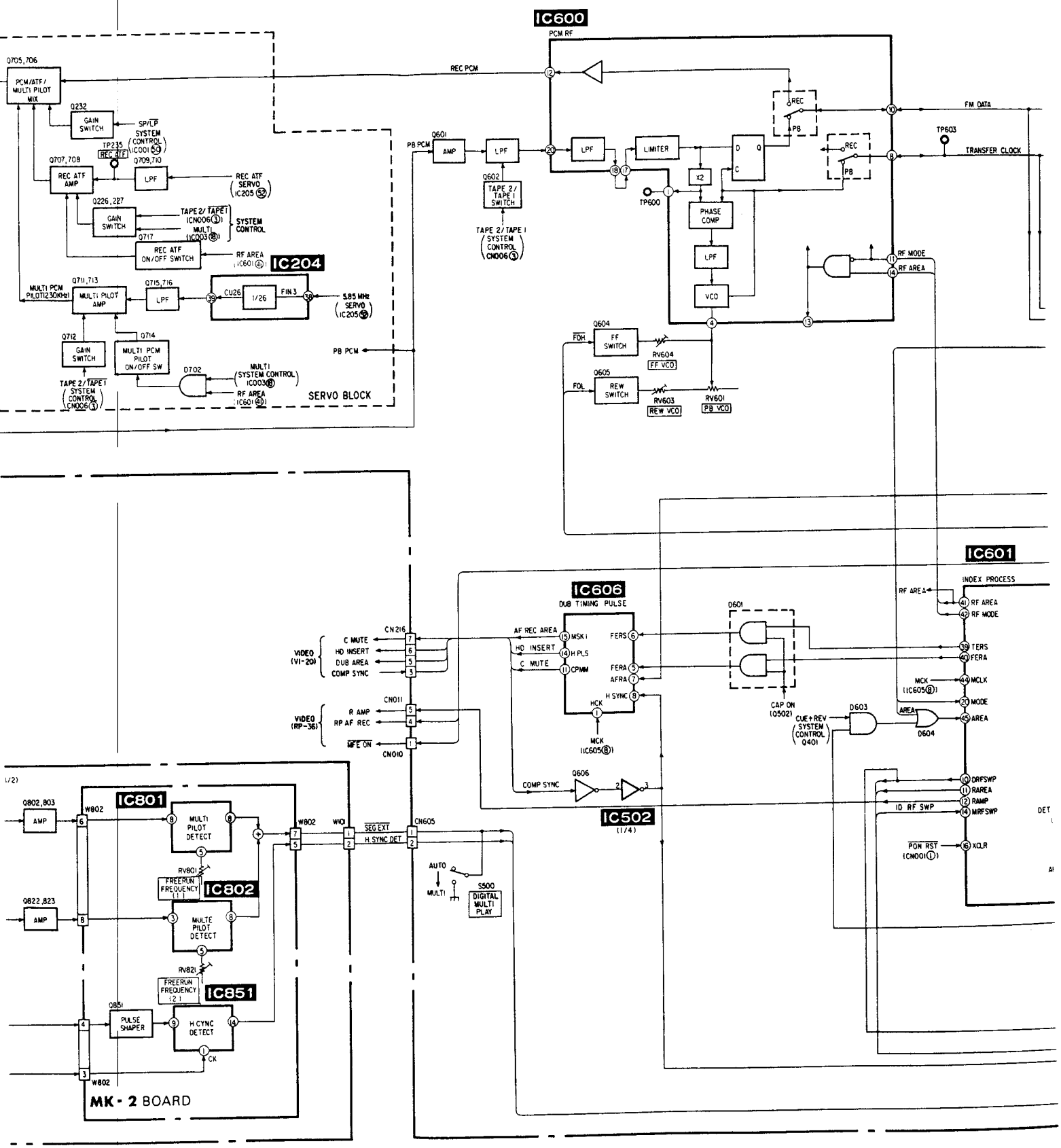
IC600
PCM RF
REC PCM
PB PCM
FM DATA
TRANSFER CLOCK
TP603
TP600
REC
PB
AMP
LPF
LIMITER
X2
PHASE COMP
VCO
RF MODE
RF AREA
Q601
Q602
TAPE 2/ TAPE 1 SWITCH
TAPE 2/ TAPE 1 (SYSTEM CONTROL CN006 3)
Q604
FF SWITCH
RV604
FF VCO
Q605
REW SWITCH
RV603
REW VCO
RV601
PB VCO
FOH
FOL
Q705,706
PCM/ATF/ MULTI PILOT MIX
Q232
GAIN SWITCH
SP/LP SYSTEM CONTROL (C001 52)
TP235
REC ATF
Q707,708
REC ATF AMP
Q709,710
LPF
REC ATF SERVO (IC205 52)
Q226,227
GAIN SWITCH
TAPE 2/ TAPE1 (CN006 3)
MULTI (IC003 18)
SYSTEM CONTROL
Q717
REC ATF ON/OFF SWITCH
RF AREA (IC601 41)
IC204
MULTI PCM PILOT(230KHz)
Q711,713
MULTI PILOT AMP
Q715,716
LPF
CU26
1/26
FIN3
5.85 MHz SERVO (IC205 39)
Q712
GAIN SWITCH
Q714
MULTI PCM PILOT ON/OFF SW
Q702
MULTI (SYSTEM CONTROL IC003 18)
RF AREA (IC601 41)
TAPE 2/ TAPE1 (SYSTEM CONTROL CN006 3)
SERVO BLOCK
IC606
DUB TIMING PULSE
AF REC AREA
HD INSERT
C MUTE
MSK I
H PLS
CPMM
FERS
FERA
AFRA
H SYNC
HCK
MCK (IC605 8)
CN216
VIDEO (VI-20)
C MUTE
HD INSERT
DUB AREA
COMP SYNC
CN011
VIDEO (RP-36)
R AMP
RP AF REC
MFE ON
CN010
IC601
INDEX PROCESS
RF AREA
RF MODE
TERS
FERA
MCK (IC605 8)
MCLK
MODE
AREA
D601
D603
D604
CAP ON (Q502)
CUE+REV (SYSTEM CONTROL Q401)
Q606
COMP SYNC
IC502 (1/4)
DRFSWP
RAREA
RAMP
MRFSWP
ID RF SWP
PON RST (CN001 1)
XCLR
Q802,803
AMP
W802
IC801
MULTI PILOT DETECT
RV801
FREERUN FREQUENCY (1)
IC802
Q822,823
AMP
MULTI PILOT DETECT
RV821
FREERUN FREQUENCY (2)
IC851
Q851
PULSE SHAPER
H CYNC DETECT
CK
W802
W801
SEG EXT
H SYNC DET
CN605
AUTO
MULTI
S500
DIGITAL MULTI PLAY
MK-2 BOARD

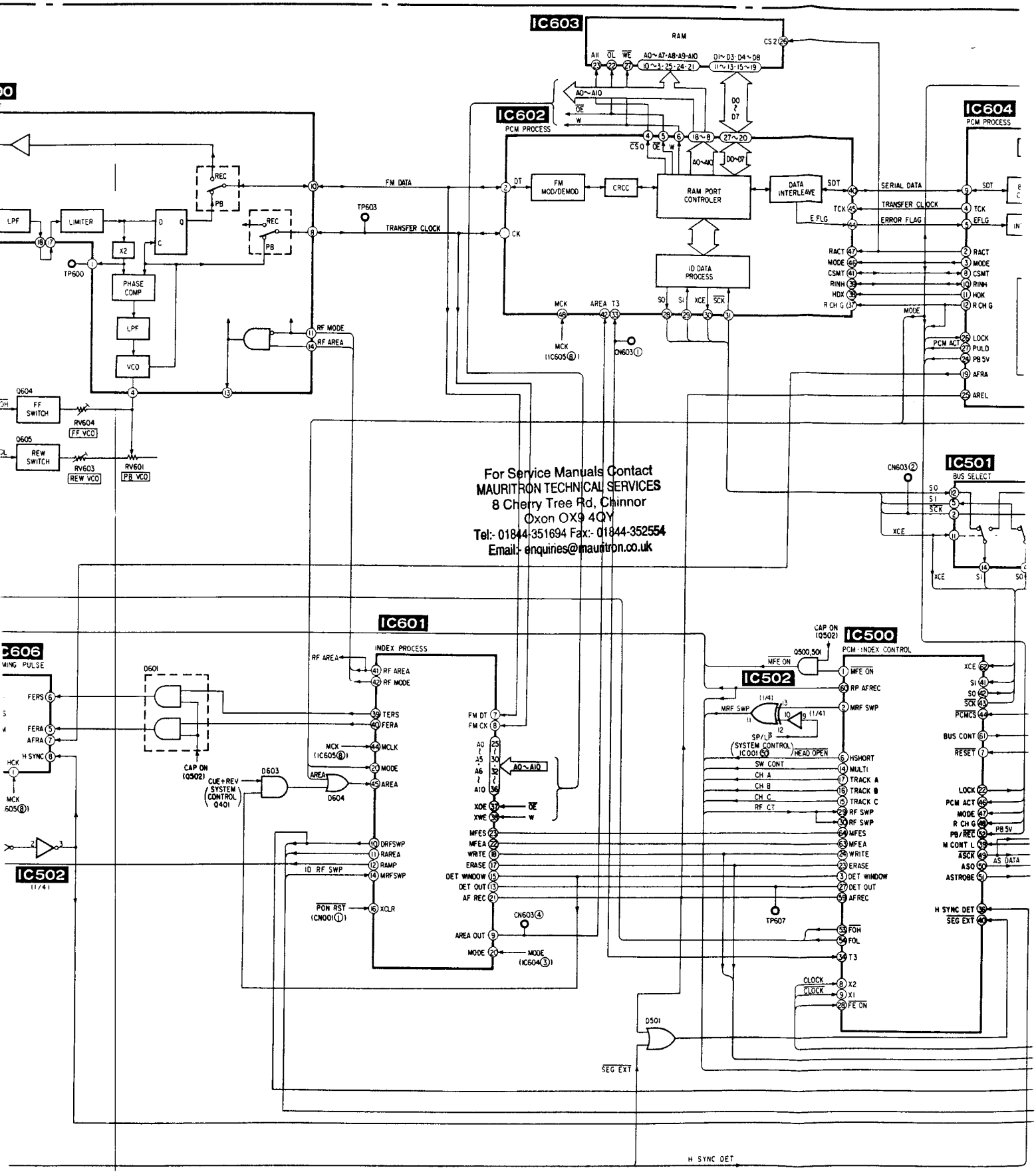


For Service Manuals Contact
MAURITRON TECHNICAL SERVICES
8 Cherry Tree Rd, Chinnor
Oxon OX9 4QY
Tel:- 01844-351694 Fax:- 01844-352554
Email:- enquiries@mauritron.co.uk

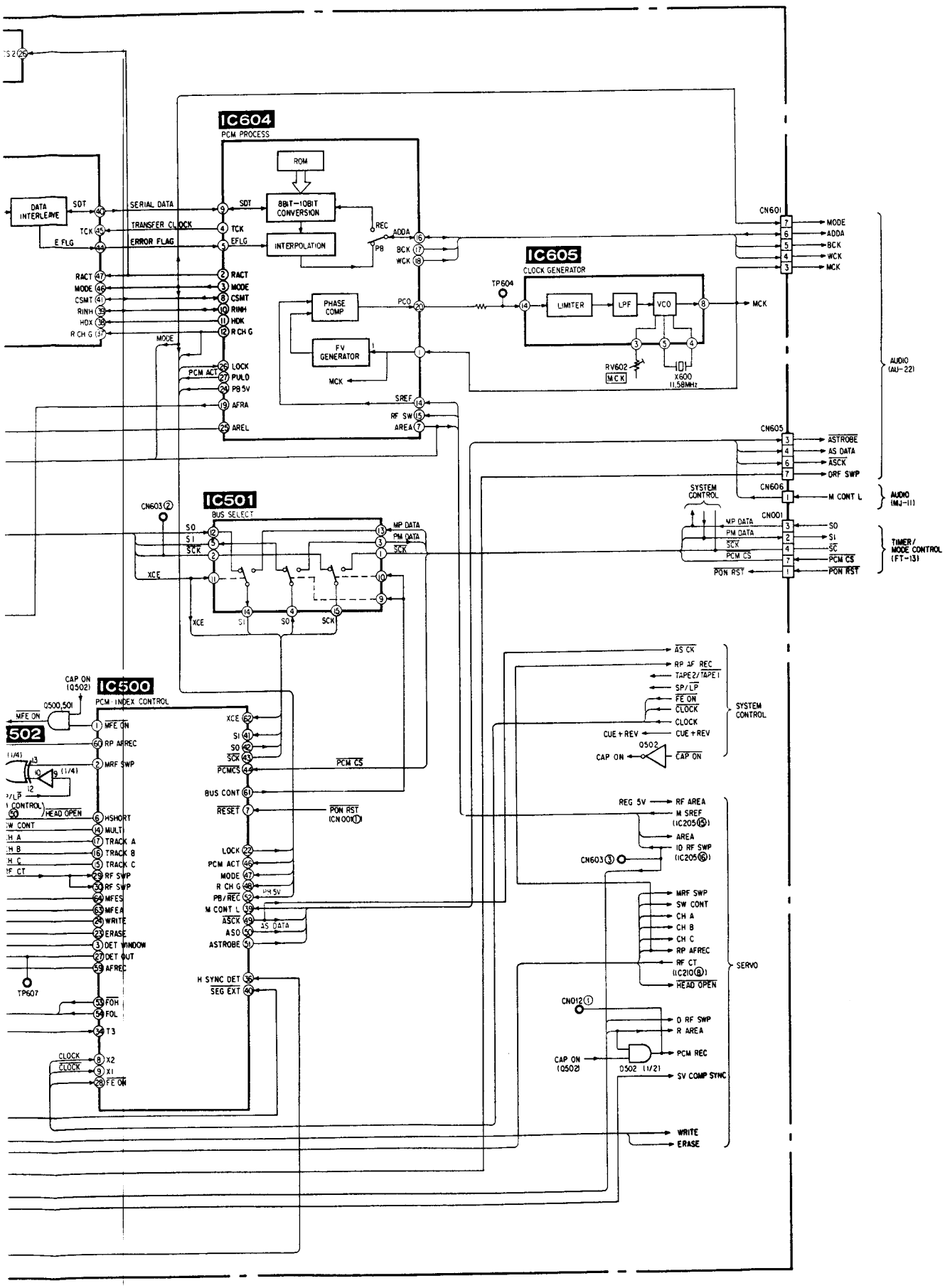
IC604
PCM PROCESS
ROM
8BIT-10BIT CONVERSION
INTERPOLATION
PHASE COMP
FV GENERATOR
IC605
CLOCK GENERATOR
LIMITER
LPF
VCO
IC501
BUS SELECT
IC500
PCM INDEX CONTROL
DATA INTERLEAVE
SERIAL DATA
TRANSFER CLOCK
ERROR FLAG
CN601
CN605
CN606
CN001
CN603
CN012
TP604
TP607
RV602
X600 11.58MHz
AUDIO (AU-22)
AUDIO (MJ-11)
TIMER/MODE CONTROL (FT-13)
SYSTEM CONTROL
SERVO
Q500,501
Q502
CAP ON (Q502)
D502 (1/2)

## 3-22. TIMER/MODE CONTROL BLOCK DIAGRAM

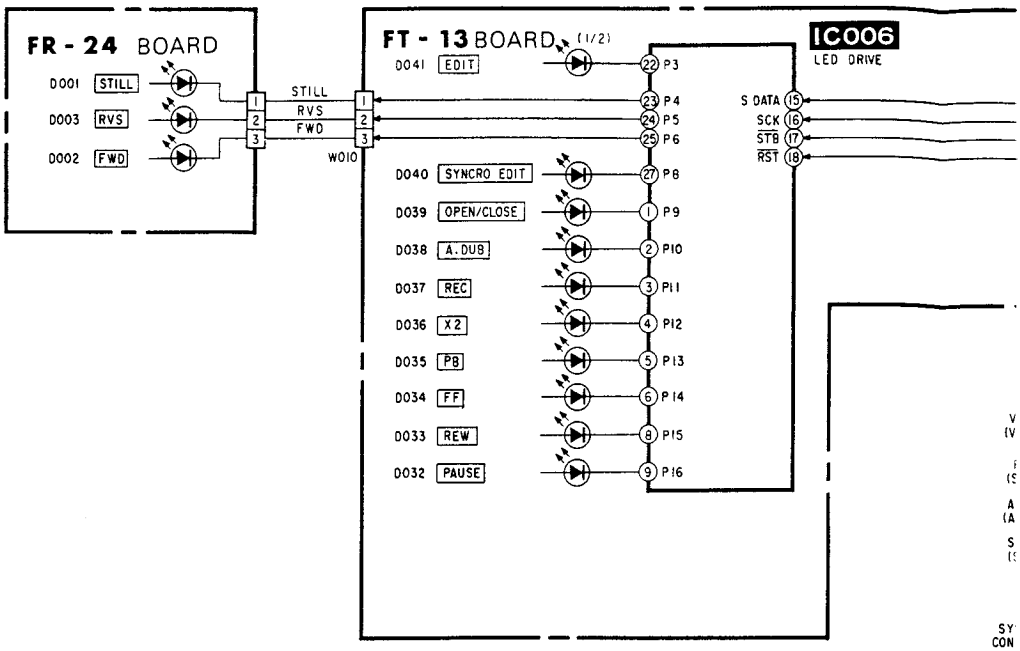


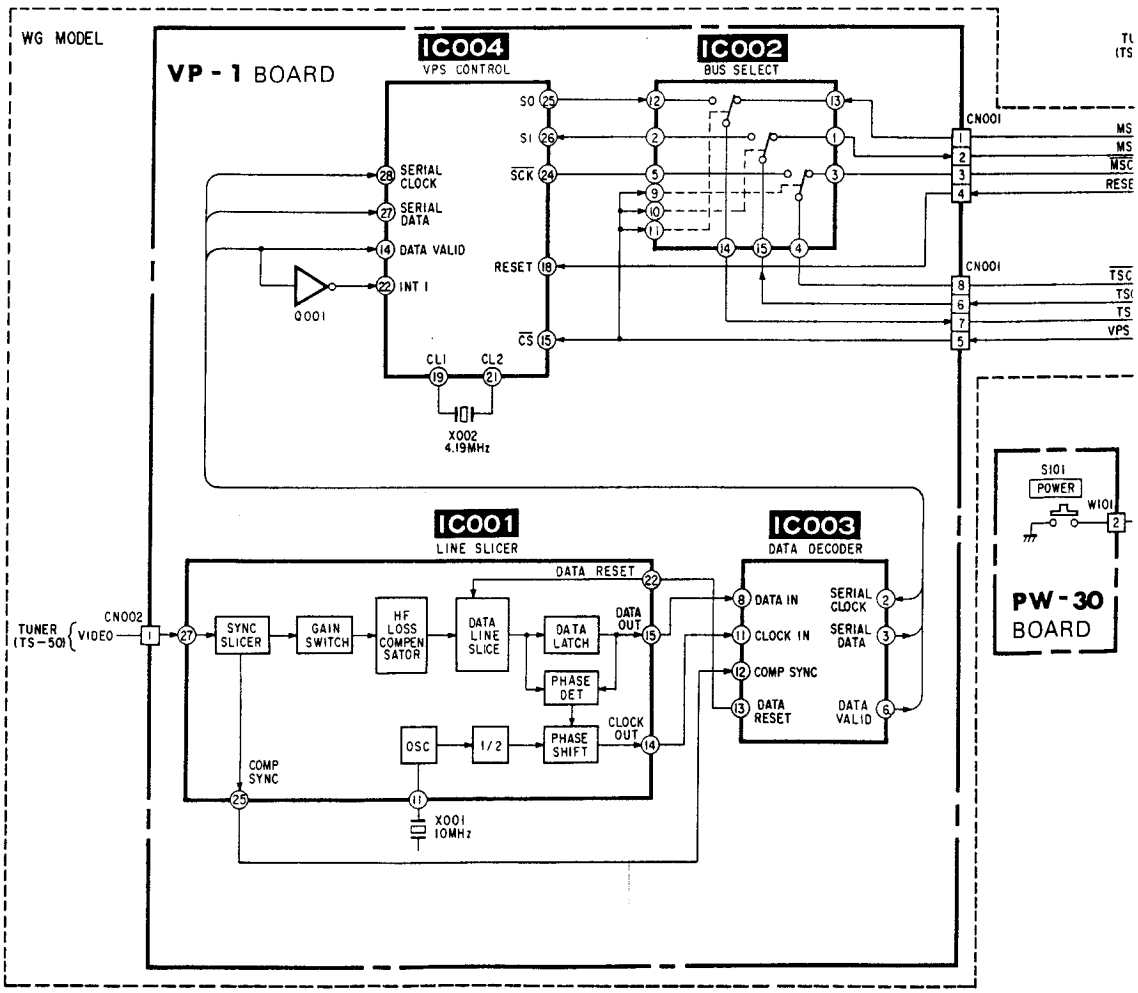

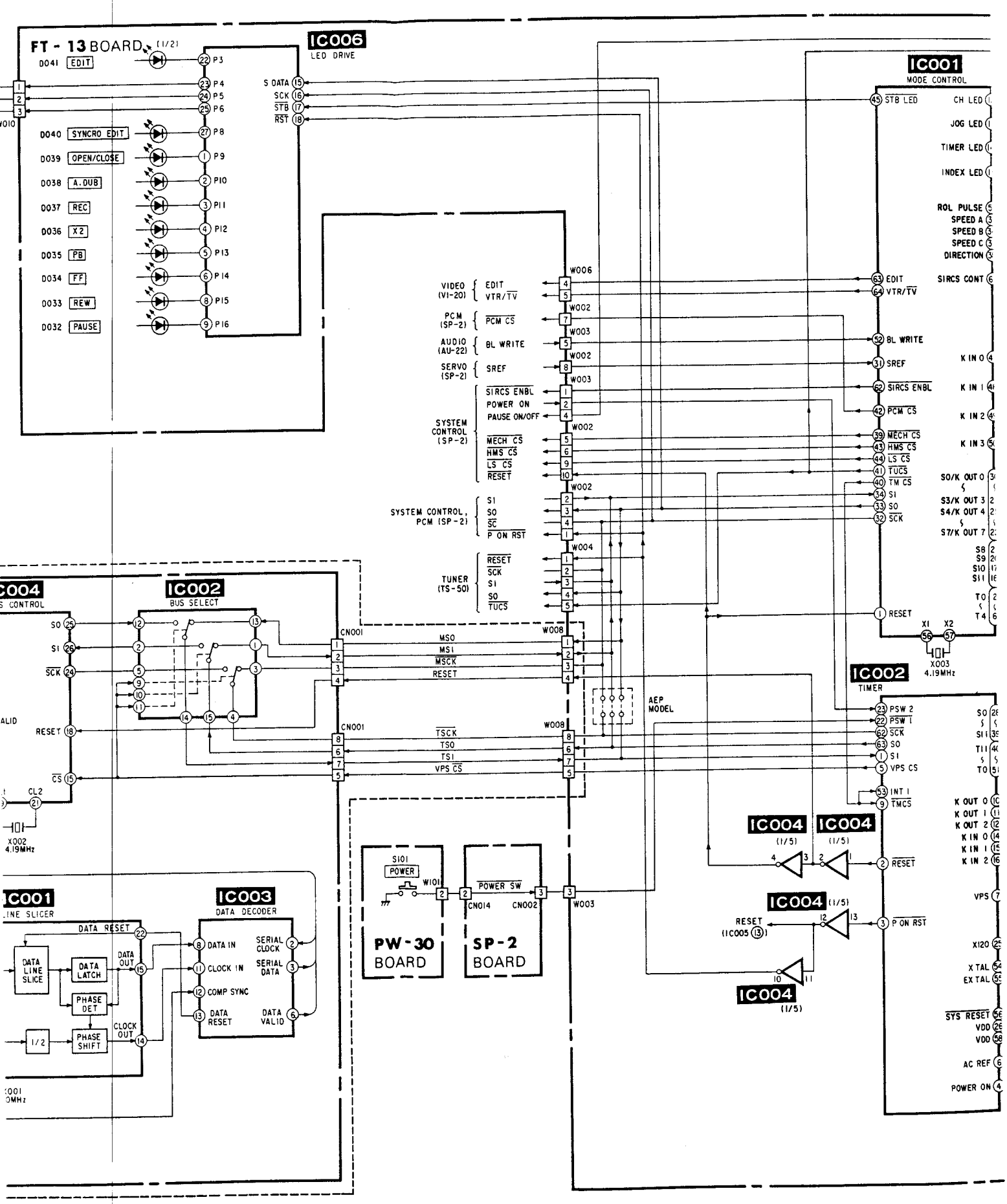
FT - 13 BOARD
IC006
LED DRIVE
IC001
MODE CONTROL
IC002
BUS SELECT
IC002
TIMER
IC003
DATA DECODER
IC004
(1/5)
PW-30
BOARD
SP-2
BOARD
POWER
POWER SW
AEP
MODEL
X002
4.19MHz
X003
4.19MHz
EDIT
SYNCRO EDIT
OPEN/CLOSE
A.DUB
REC
X2
PB
FF
REW
PAUSE
S DATA
SCK
STB
RST
VIDEO (VI-20)
PCM (SP-2)
AUDIO (AU-22)
SERVO (SP-2)
SYSTEM CONTROL (SP-2)
SYSTEM CONTROL, PCM (SP-2)
TUNER (TS-50)
STB LED
CH LED
JOG LED
TIMER LED
INDEX LED
ROL PULSE
SPEED A
SPEED B
SPEED C
DIRECTION
SIRCS CONT
BL WRITE
SREF
SIRCS ENBL
POWER ON
PAUSE ON/OFF
MECH CS
HMS CS
LS CS
RESET
TUCS
TM CS
SI
SO
SCK
SC
P ON RST
MSO
MSI
MSCK
TSCK
TSO
TSI
VPS CS
INT 1
TMCS
PSW 2
PSW 1
K IN 0
K IN 1
K IN 2
K IN 3
K OUT 0
K OUT 1
K OUT 2
VPS
X120
X TAL
EX TAL
SYS RESET
VDD
AC REF
POWER ON
DATA LINE SLICE
DATA LATCH
PHASE DET
PHASE SHIFT
1/2
DATA RESET
DATA OUT
CLOCK OUT
DATA IN
CLOCK IN
COMP SYNC
DATA RESET
SERIAL CLOCK
SERIAL DATA
DATA VALID

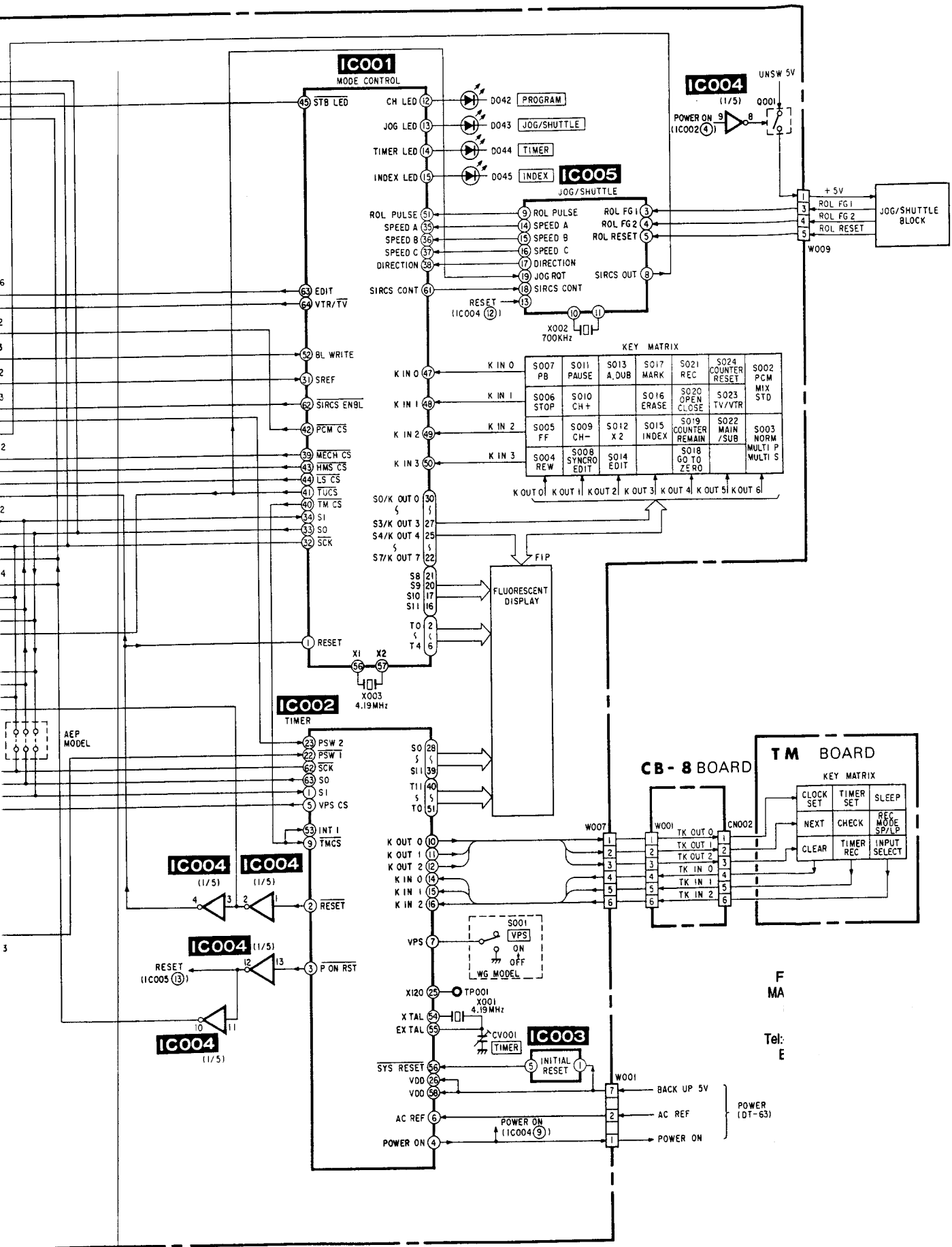
IC001
MODE CONTROL
STB LED
CH LED
JOG LED
TIMER LED
INDEX LED
D042 PROGRAM
D043 JOG/SHUTTLE
D044 TIMER
D045 INDEX
IC004 (1/5)
UNSW 5V
Q001
POWER ON (IC002 4)
IC005
JOG/SHUTTLE
ROL PULSE
SPEED A
SPEED B
SPEED C
DIRECTION
JOG RQT
SIRCS CONT
ROL FG1
ROL FG2
ROL RESET
SIRCS OUT
+5V
JOG/SHUTTLE BLOCK
W009
RESET (IC004 12)
X002 700KHz
KEY MATRIX
K IN 0
K IN 1
K IN 2
K IN 3
K OUT 0
K OUT 1
K OUT 2
K OUT 3
K OUT 4
K OUT 5
K OUT 6
S007 PB
S011 PAUSE
S013 A.DUB
S017 MARK
S021 REC
S024 COUNTER RESET
S002 PCM MIX STD
S006 STOP
S010 CH+
S016 ERASE
S020 OPEN CLOSE
S023 TV/VTR
S005 FF
S009 CH-
S012 X2
S015 INDEX
S019 COUNTER REMAIN
S022 MAIN /SUB
S003 NORM MULTI P MULTI S
S004 REW
S008 SYNCRO EDIT
S014 EDIT
S018 GO TO ZERO
EDIT
VTR/TV
BL WRITE
SREF
SIRCS ENBL
PCM CS
MECH CS
HMS CS
LS CS
TUCS
TM CS
SI
SO
SCK
RESET
X1
X2
X003 4.19MHz
S0/K OUT 0
S3/K OUT 3
S4/K OUT 4
S7/K OUT 7
S8
S9
S10
S11
T0
T4
FIP
FLUORESCENT DISPLAY
IC002
TIMER
AEP MODEL
PSW 2
PSW 1
SCK
SO
SI
VPS CS
INT 1
TMCS
S0
S1
T11
T0
K OUT 0
K OUT 1
K OUT 2
K IN 0
K IN 1
K IN 2
W007
W001
CN002
CB-8 BOARD
TM BOARD
KEY MATRIX
TK OUT 0
TK OUT 1
TK OUT 2
TK IN 0
TK IN 1
TK IN 2
CLOCK SET
TIMER SET
SLEEP
NEXT
CHECK
REC MODE SP/LP
CLEAR
TIMER REC
INPUT SELECT
IC004 (1/5)
IC004 (1/5)
IC004 (1/5)
IC004 (1/5)
RESET
RESET (IC005 13)
P ON RST
S001
VPS
ON
OFF
WG MODEL
VPS
X120
TP001
X001 4.19MHz
X TAL
EX TAL
CV001
TIMER
IC003
INITIAL RESET
SYS RESET
VDD
VDD
AC REF
POWER ON
POWER ON (IC004 9)
BACK UP 5V
AC REF
POWER ON
POWER (DT-63)

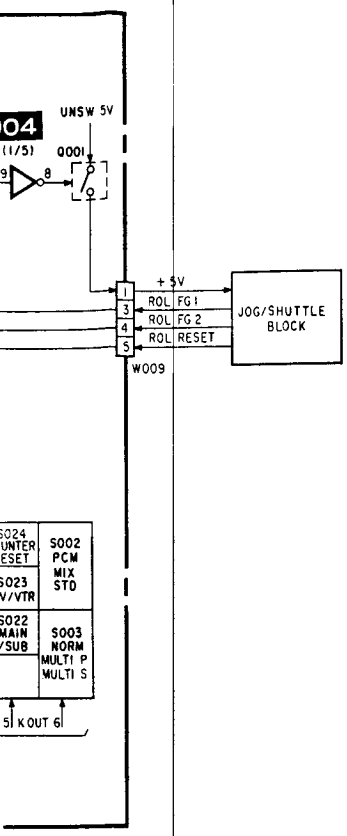
UNSW 5V
Q001
+5V
ROL FG1
ROL FG2
ROL RESET
JOG/SHUTTLE BLOCK
W009
S002 PCM MIX STO
S003 NORM MULTI P MULTI S
K OUT 6

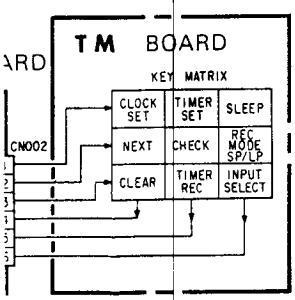
TM BOARD
KEY MATRIX
CLOCK SET
TIMER SET
SLEEP
NEXT
CHECK
REC MODE SP/LP
CLEAR
TIMER REC
INPUT SELECT
CN002

POWER
(DT-63)

## 3-23. POWER BLOCK DIAGRAM

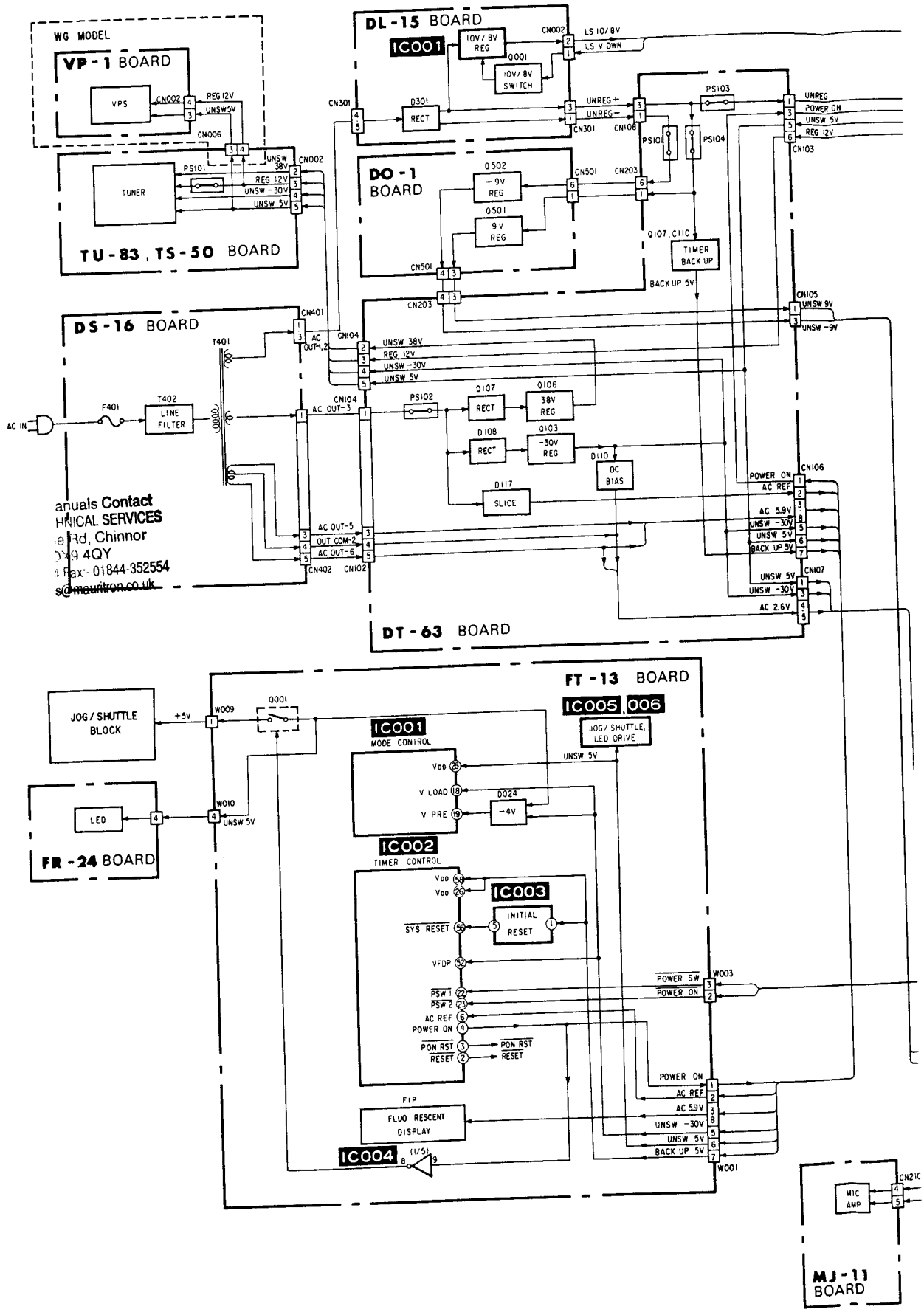


anuals Contact
HNICAL SERVICES
Rd, Chinnor
49 4QY
Fax:- 01844-352554
s@mauritron.co.uk

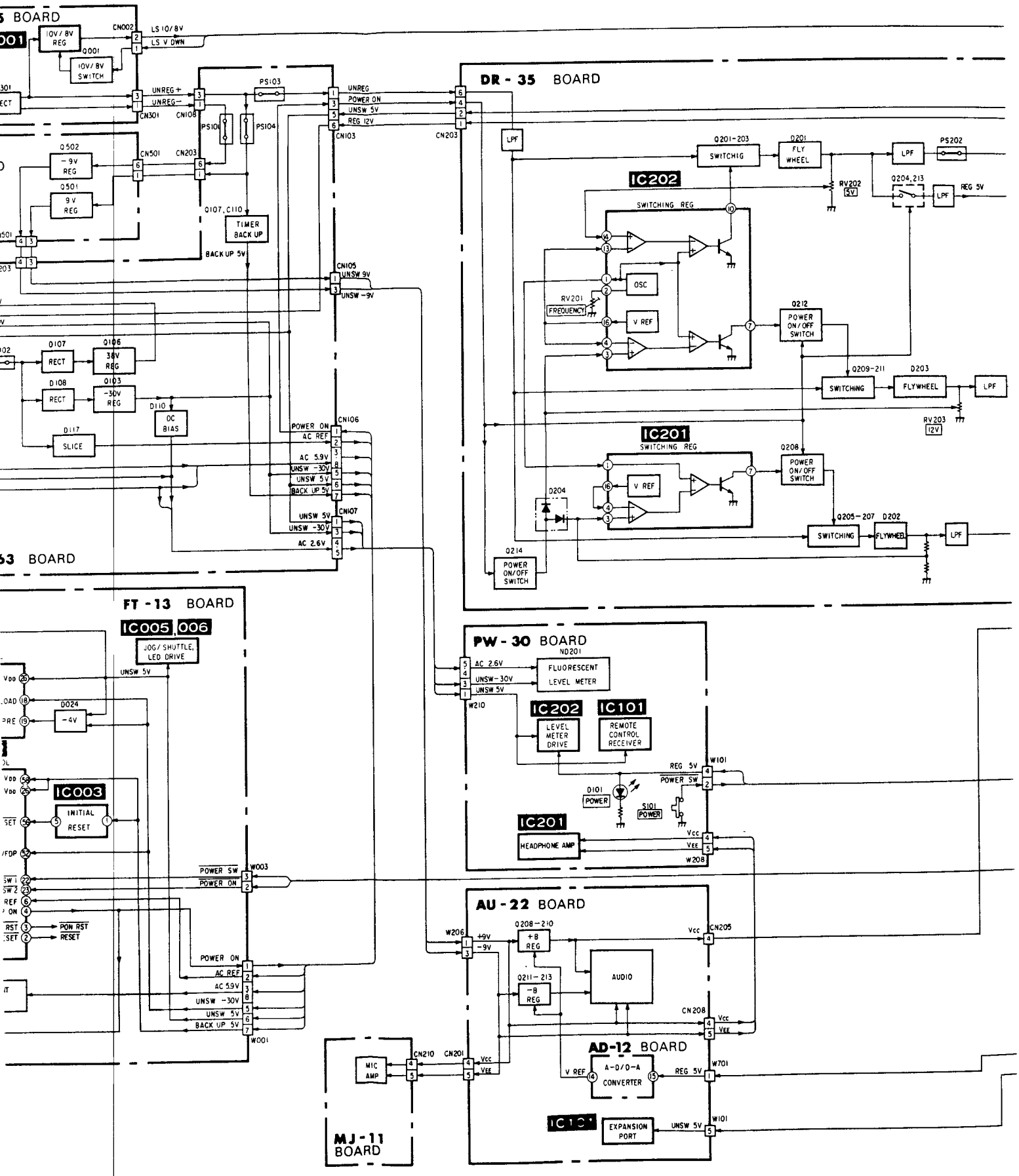

BOARD
10V/8V REG
Q001
10V/8V SWITCH
CN002
LS 10/8V
LS V DWN
UNREG+
UNREG−
CN301
CN108
PS103
PS101
PS104
UNREG
POWER ON
UNSW 5V
REG 12V
CN103
CN203
Q502
−9V REG
Q501
9V REG
CN501
CN203
Q107, C110
TIMER BACK UP
BACK UP 5V
CN105
UNSW 9V
UNSW −9V
D107
RECT
Q106
38V REG
D108
RECT
Q103
−30V REG
D110
DC BIAS
D117
SLICE
POWER ON
AC REF
AC 5.9V
UNSW −30V
UNSW 5V
BACK UP 5V
CN106
CN107
AC 2.6V
DR - 35 BOARD
LPF
Q201-203
SWITCHIG
Q201
FLY WHEEL
PS202
IC202
RV202
5V
Q204, 213
REG 5V
SWITCHING REG
OSC
RV201
FREQUENCY
V REF
Q212
POWER ON/OFF SWITCH
Q209-211
SWITCHING
D203
FLYWHEEL
RV203
12V
IC201
Q208
D204
Q205-207
D202
Q214
FT - 13 BOARD
IC005, 006
JOG/SHUTTLE, LED DRIVE
D024
−4V
IC003
INITIAL RESET
PON RST
RESET
W003
W001
PW - 30 BOARD
ND201
FLUORESCENT LEVEL METER
W210
IC202
LEVEL METER DRIVE
IC101
REMOTE CONTROL RECEIVER
W101
D101
POWER
S101
POWER
IC201
HEADPHONE AMP
W208
AU - 22 BOARD
W206
Q208-210
+B REG
Q211-213
−B REG
AUDIO
CN205
CN208
AD-12 BOARD
A-D/D-A CONVERTER
W701
EXPANSION PORT
MIC AMP
CN210
CN201
MJ - 11 BOARD

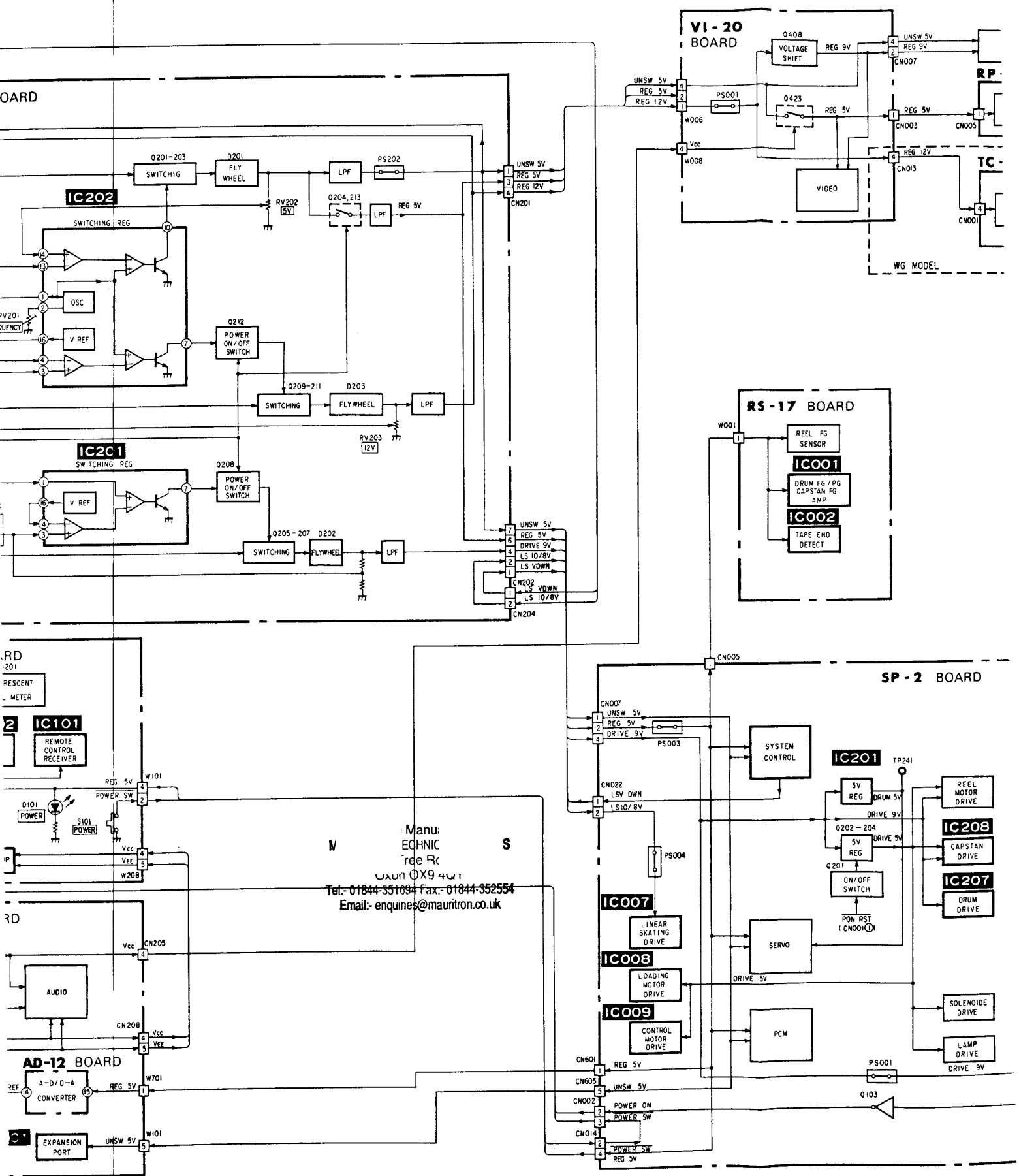


Manu
ECHNIC
ree R
Oxon OX9 4QT
Tel:- 01844-351694 Fax:- 01844-352554
Email:- enquiries@mauritron.co.uk

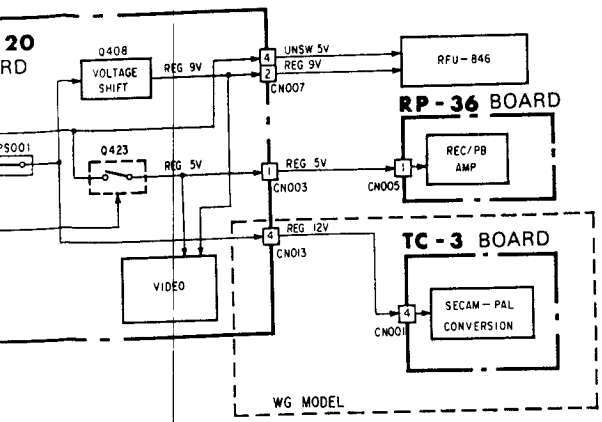
20
RD
Q408
VOLTAGE SHIFT
REG 9V
UNSW 5V
REG 9V
CN007
RFU-846
RP-36 BOARD
REC/PB AMP
CN005
Q423
REG 5V
REG 5V
CN003
REG 12V
CN013
TC-3 BOARD
VIDEO
SECAM-PAL CONVERSION
CN001
WG MODEL

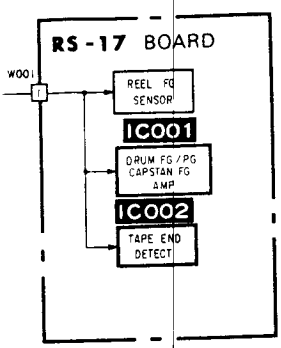
RS-17 BOARD
W001
REEL FG SENSOR
IC001
DRUM FG/PG CAPSTAN FG AMP
IC002
TAPE END DETECT

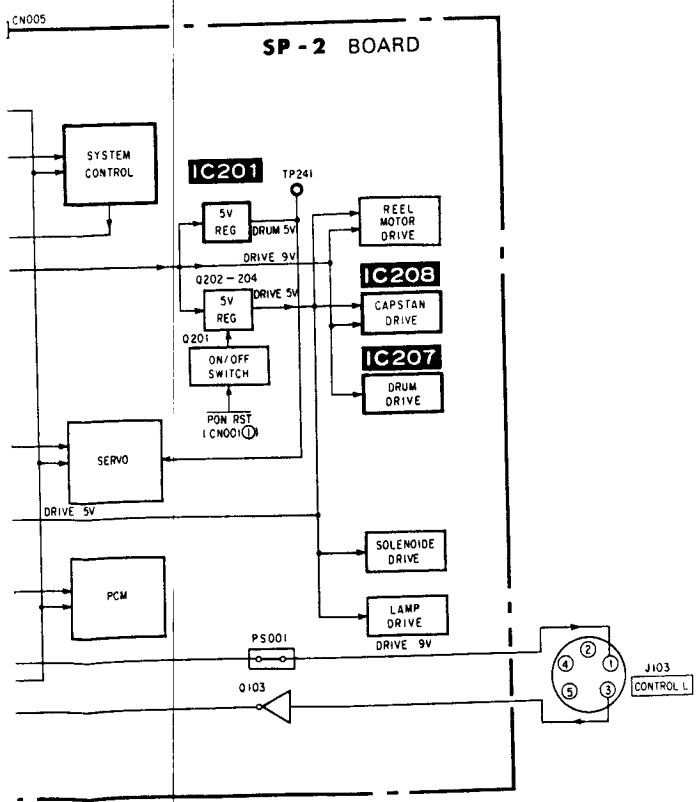
CN005
SP-2 BOARD
SYSTEM CONTROL
IC201
TP241
5V REG
DRUM 5V
REEL MOTOR DRIVE
DRIVE 9V
Q202-204
5V REG
DRIVE 5V
IC208
CAPSTAN DRIVE
Q201
ON/OFF SWITCH
IC207
DRUM DRIVE
PON RST
(CN001-1)
SERVO
DRIVE 5V
SOLENOIDE DRIVE
PCM
LAMP DRIVE
DRIVE 9V
PS001
J103
CONTROL L
Q103

## 4-1. FRAME SCHEMATIC DIAGRAM

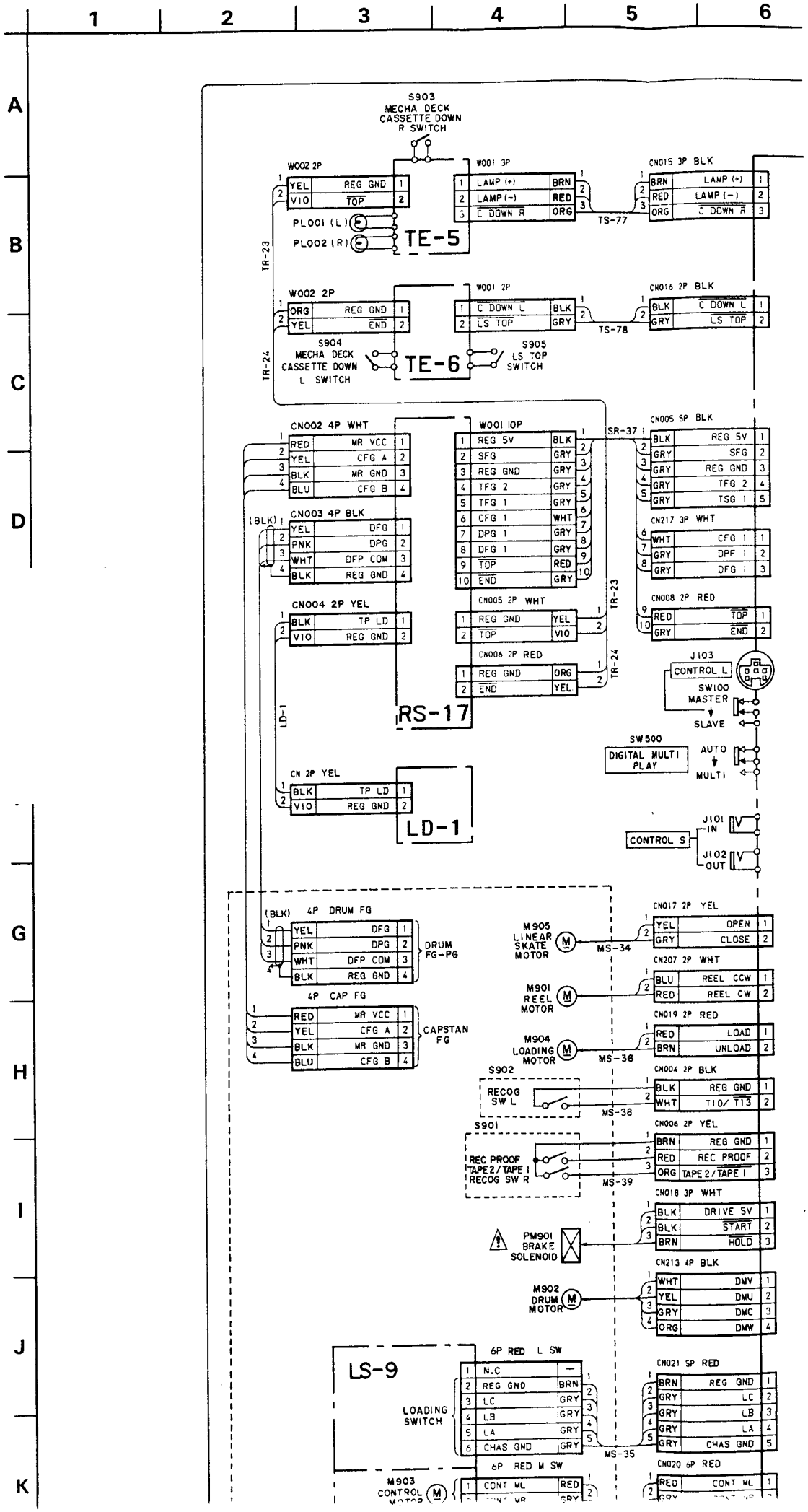

GRAM

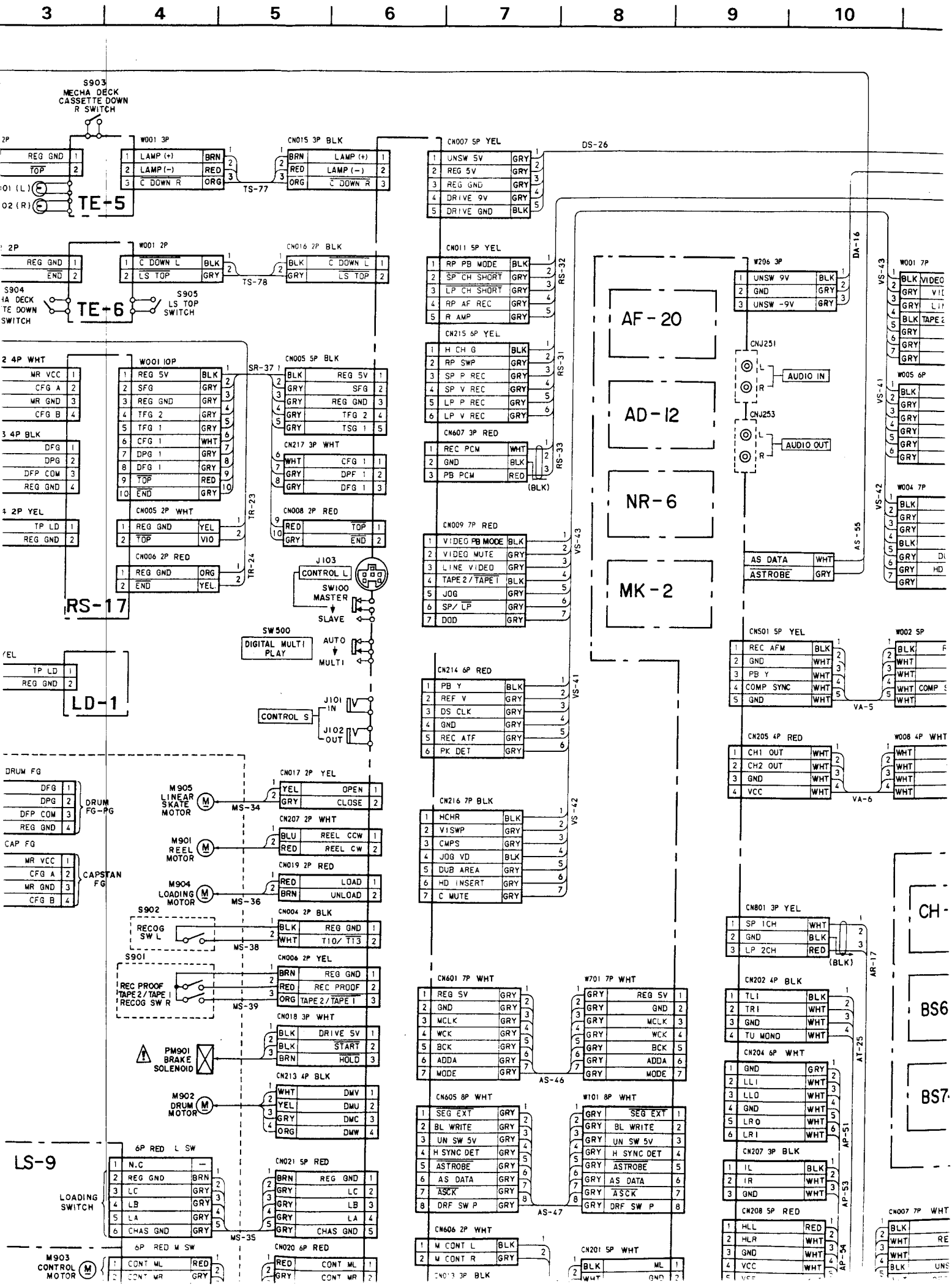
3
4
5
6
7
8
9
10
S903
MECHA DECK
CASSETTE DOWN
R SWITCH
W001 3P
CN015 3P BLK
LAMP (+)
LAMP (-)
C DOWN R
TS-77
TE-5
W001 2P
CN016 2P BLK
C DOWN L
LS TOP
TS-78
S904
S905
LS TOP
SWITCH
TE-6
W001 10P
CN005 5P BLK
REG 5V
SFG
REG GND
TFG 2
TFG 1
CFG 1
DPG 1
DFG 1
TOP
END
SR-37
CN217 3P WHT
CFG 1
DPF 1
DFG 1
CN005 2P WHT
CN008 2P RED
CN006 2P RED
TR-23
TR-24
RS-17
J103
CONTROL L
SW100
MASTER
SLAVE
SW500
DIGITAL MULTI
PLAY
AUTO
MULTI
LD-1
J101
IN
CONTROL S
J102
OUT
CN007 5P YEL
UNSW 5V
REG 5V
REG GND
DRIVE 9V
DRIVE GND
DS-26
CN011 5P YEL
RP PB MODE
SP CH SHORT
LP CH SHORT
RP AF REC
R AMP
RS-32
CN215 6P YEL
H CH G
RP SWP
SP P REC
SP V REC
LP P REC
LP V REC
RS-31
CN607 3P RED
REC PCM
GND
PB PCM
(BLK)
RS-33
CN009 7P RED
VIDEO PB MODE
VIDEO MUTE
LINE VIDEO
TAPE 2/TAPE 1
JOG
SP/LP
DOD
VS-43
CN214 6P RED
PB Y
REF V
DS CLK
GND
REC ATF
PK DET
VS-41
CN216 7P BLK
HCHR
VISWP
CMPS
JOG VD
DUB AREA
HD INSERT
C MUTE
VS-42
AF-20
AD-12
NR-6
MK-2
W206 3P
UNSW 9V
GND
UNSW -9V
DA-16
CNJ251
AUDIO IN
CNJ253
AUDIO OUT
AS DATA
ASTROBE
AS-55
W001 7P
W005 6P
W004 7P
VS-43
VS-41
VS-42
CN501 5P YEL
REC AFM
GND
PB Y
COMP SYNC
GND
W002 5P
VA-5
CN205 4P RED
CH1 OUT
CH2 OUT
GND
VCC
W008 4P WHT
VA-6
CN801 3P YEL
SP 1CH
GND
LP 2CH
(BLK)
AR-17
CN202 4P BLK
TLI
TRI
GND
TU MONO
AT-25
CN204 6P WHT
GND
LLI
LLO
GND
LRO
LRI
AP-51
CN207 3P BLK
IL
IR
GND
AP-53
CN208 5P RED
HLL
HLR
GND
VCC
AP-54
CN007 7P WHT
CH-
BS6
BS7
DRUM FG
DFG
DPG
DFP COM
REG GND
DRUM FG-PG
CAP FG
MR VCC
CFG A
MR GND
CFG B
CAPSTAN FG
M905
LINEAR
SKATE
MOTOR
CN017 2P YEL
OPEN
CLOSE
MS-34
M901
REEL
MOTOR
CN207 2P WHT
REEL CCW
REEL CW
M904
LOADING
MOTOR
CN019 2P RED
LOAD
UNLOAD
MS-36
S902
RECOG
SW L
CN004 2P BLK
REG GND
T10/T13
MS-38
S901
REC PROOF
TAPE 2/TAPE 1
RECOG SW R
CN006 2P YEL
REC PROOF
TAPE 2/TAPE 1
MS-39
PM901
BRAKE
SOLENOID
CN018 3P WHT
DRIVE 5V
START
HOLD
M902
DRUM
MOTOR
CN213 4P BLK
DWV
DWU
DWC
DWW
LS-9
6P RED L SW
N.C
REG GND
LC
LB
LA
CHAS GND
LOADING
SWITCH
MS-35
CN021 5P RED
REG GND
LC
LB
LA
CHAS GND
6P RED M SW
CONT ML
CONT MR
M903
CONTROL
MOTOR
CN020 6P RED
CONT ML
CONT MR
CN601 7P WHT
REG 5V
GND
MCLK
WCK
BCK
ADDA
MODE
W701 7P WHT
AS-46
CN605 8P WHT
SEG EXT
BL WRITE
UN SW 5V
H SYNC DET
ASTROBE
AS DATA
ASCK
DRF SW P
W101 8P WHT
AS-47
CN606 2P WHT
M CONT L
M CONT R
CN201 5P WHT
CN013 3P BLK

Oxon OX9 4QY
Tel:- 01844-351694 Fax:- 01844-352554
Email:- enquiries@mauritron.co.uk

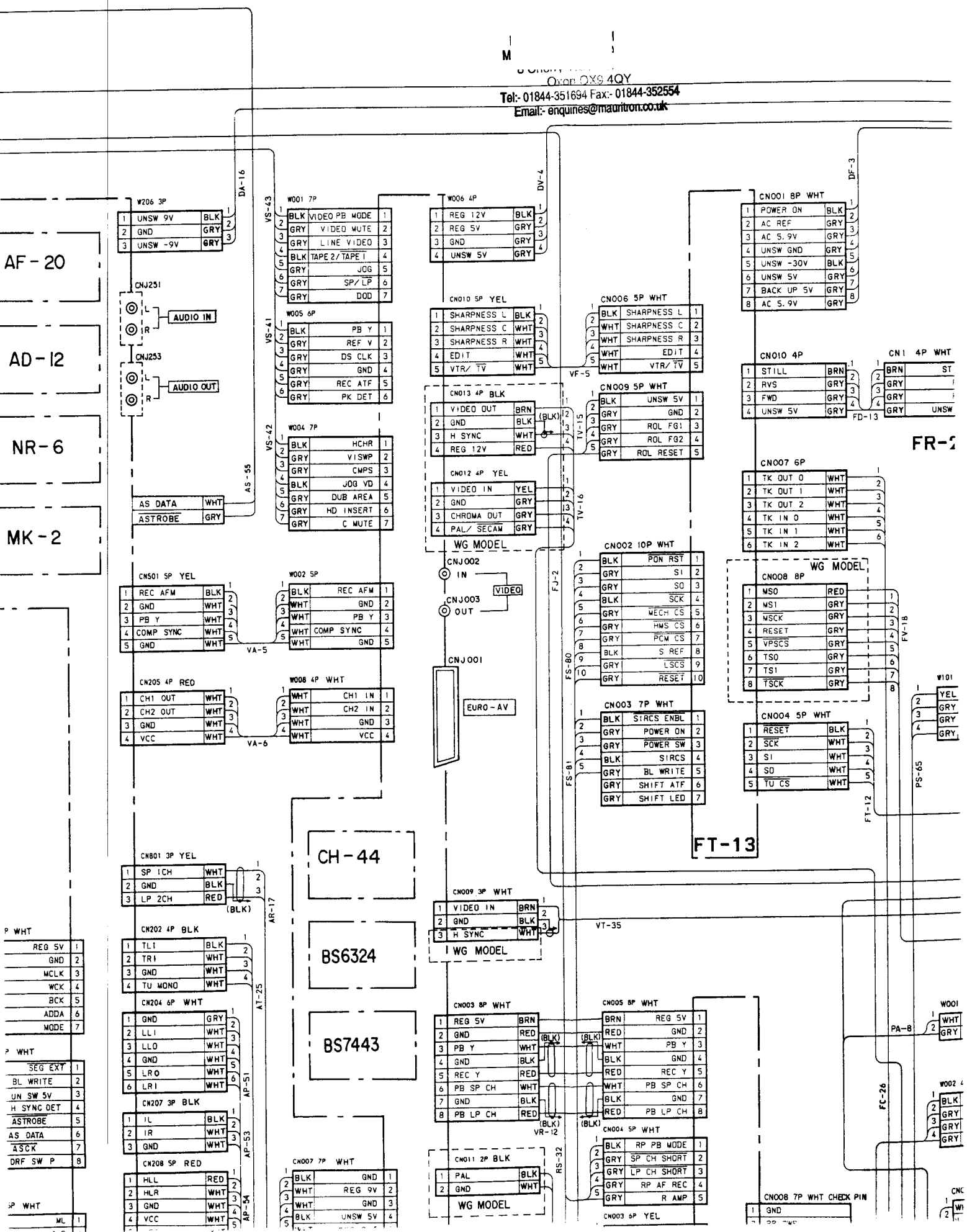

a
8 Cherry Tree Rd, Chinnor
Oxon OX9 4QY
Tel:- 01844-351694 Fax:- 01844-352554
Email:- enquiries@mauritron.co.uk

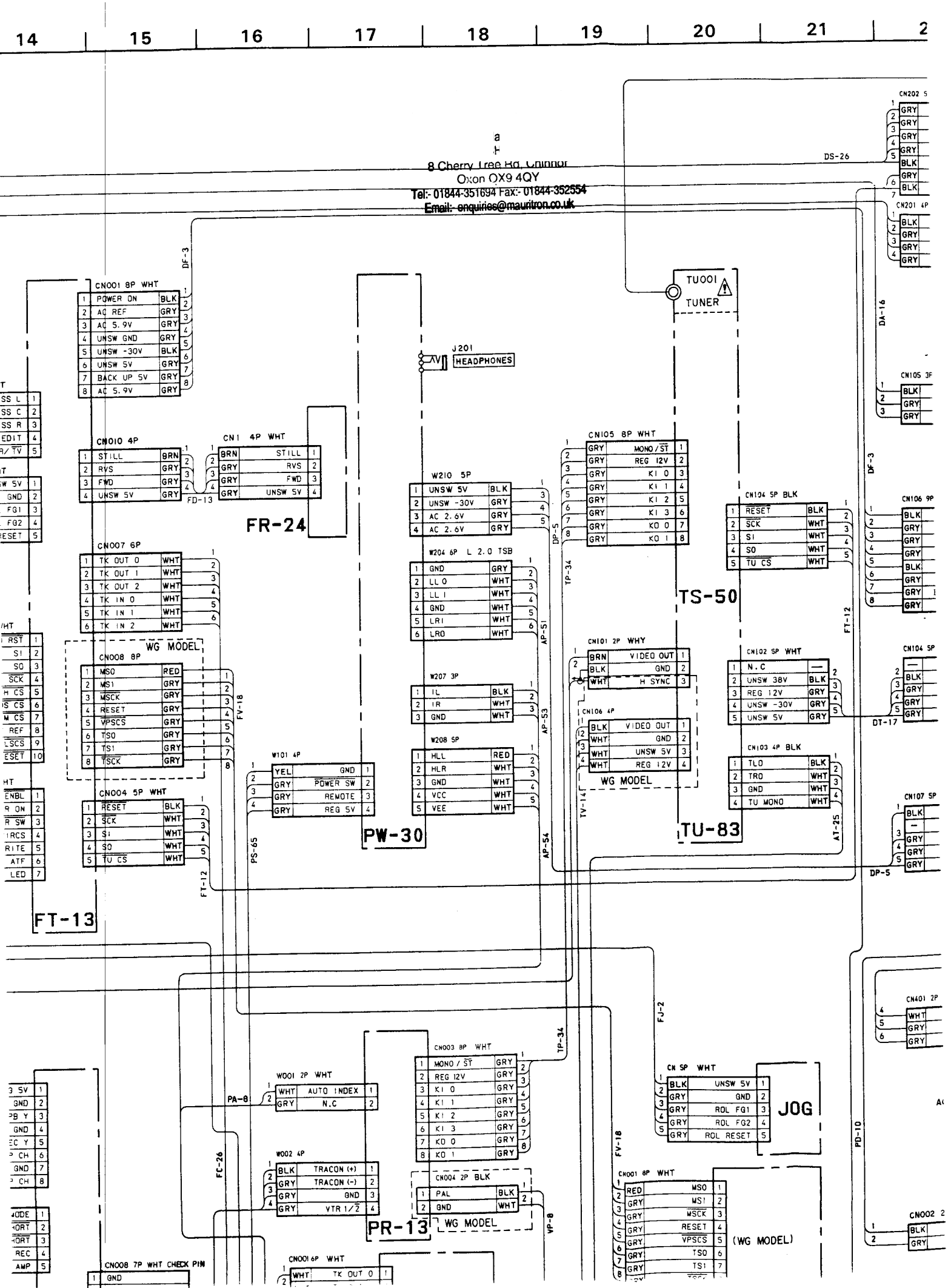

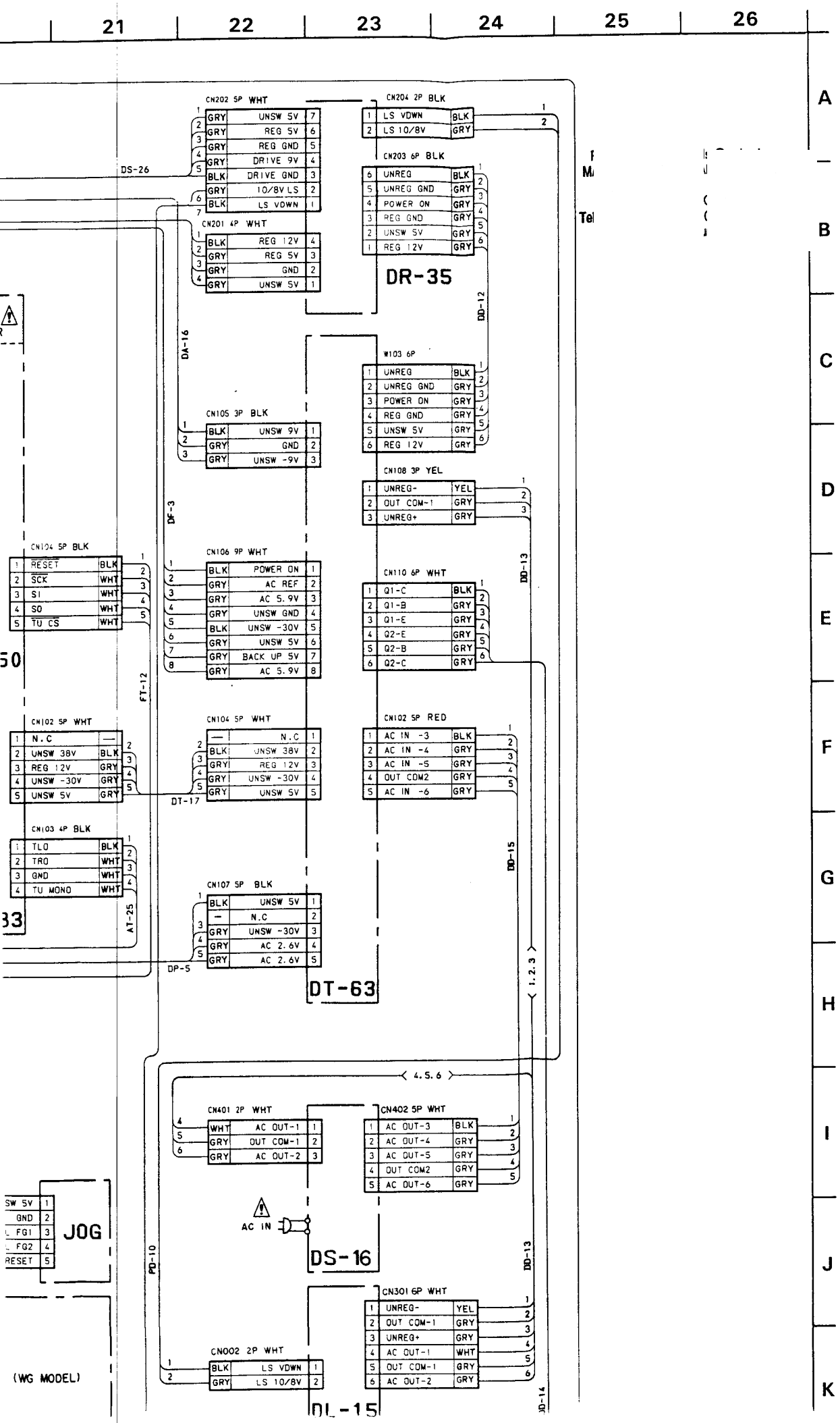
21
22
23
24
25
26
A
B
C
D
E
F
G
H
I
J
K
CN202 5P WHT
GRY UNSW 5V 7
GRY REG 5V 6
GRY REG GND 5
GRY DRIVE 9V 4
BLK DRIVE GND 3
GRY 10/8V LS 2
BLK LS VDWN 1
DS-26
CN201 4P WHT
BLK REG 12V 4
GRY REG 5V 3
GRY GND 2
GRY UNSW 5V 1
CN204 2P BLK
1 LS VDWN BLK
2 LS 10/8V GRY
CN203 6P BLK
6 UNREG BLK
5 UNREG GND GRY
4 POWER ON GRY
3 REG GND GRY
2 UNSW 5V GRY
1 REG 12V GRY
DR-35
DD-12
DA-16
W103 6P
1 UNREG BLK
2 UNREG GND GRY
3 POWER ON GRY
4 REG GND GRY
5 UNSW 5V GRY
6 REG 12V GRY
CN105 3P BLK
BLK UNSW 9V 1
GRY GND 2
GRY UNSW -9V 3
CN108 3P YEL
1 UNREG- YEL
2 OUT COM-1 GRY
3 UNREG+ GRY
DF-3
DD-13
CN104 5P BLK
RESET BLK
SCK WHT
SI WHT
SO WHT
TU CS WHT
CN106 9P WHT
BLK POWER ON 1
GRY AC REF 2
GRY AC 5.9V 3
GRY UNSW GND 4
BLK UNSW -30V 5
GRY UNSW 5V 6
GRY BACK UP 5V 7
GRY AC 5.9V 8
CN110 6P WHT
Q1-C BLK
Q1-B GRY
Q1-E GRY
Q2-E GRY
Q2-B GRY
Q2-C GRY
FT-12
CN102 5P WHT
N.C —
UNSW 38V BLK
REG 12V GRY
UNSW -30V GRY
UNSW 5V GRY
CN104 5P WHT
— N.C 1
BLK UNSW 38V 2
GRY REG 12V 3
GRY UNSW -30V 4
GRY UNSW 5V 5
DT-17
CN102 5P RED
AC IN -3 BLK
AC IN -4 GRY
AC IN -5 GRY
OUT COM2 GRY
AC IN -6 GRY
CN103 4P BLK
TLO BLK
TRO WHT
GND WHT
TU MONO WHT
AT-25
DD-15
CN107 5P BLK
BLK UNSW 5V 1
— N.C 2
GRY UNSW -30V 3
GRY AC 2.6V 4
GRY AC 2.6V 5
DP-5
DT-63
1.2.3
4.5.6
CN401 2P WHT
WHT AC OUT-1 1
GRY OUT COM-1 2
GRY AC OUT-2 3
CN402 5P WHT
AC OUT-3 BLK
AC OUT-4 GRY
AC OUT-5 GRY
OUT COM2 GRY
AC OUT-6 GRY
AC IN
DS-16
DD-13
PD-10
CN301 6P WHT
UNREG- YEL
OUT COM-1 GRY
UNREG+ GRY
AC OUT-1 WHT
OUT COM-1 GRY
AC OUT-2 GRY
CN002 2P WHT
BLK LS VDWN 1
GRY LS 10/8V 2
DL-15
DD-14
JOG
(WG MODEL)

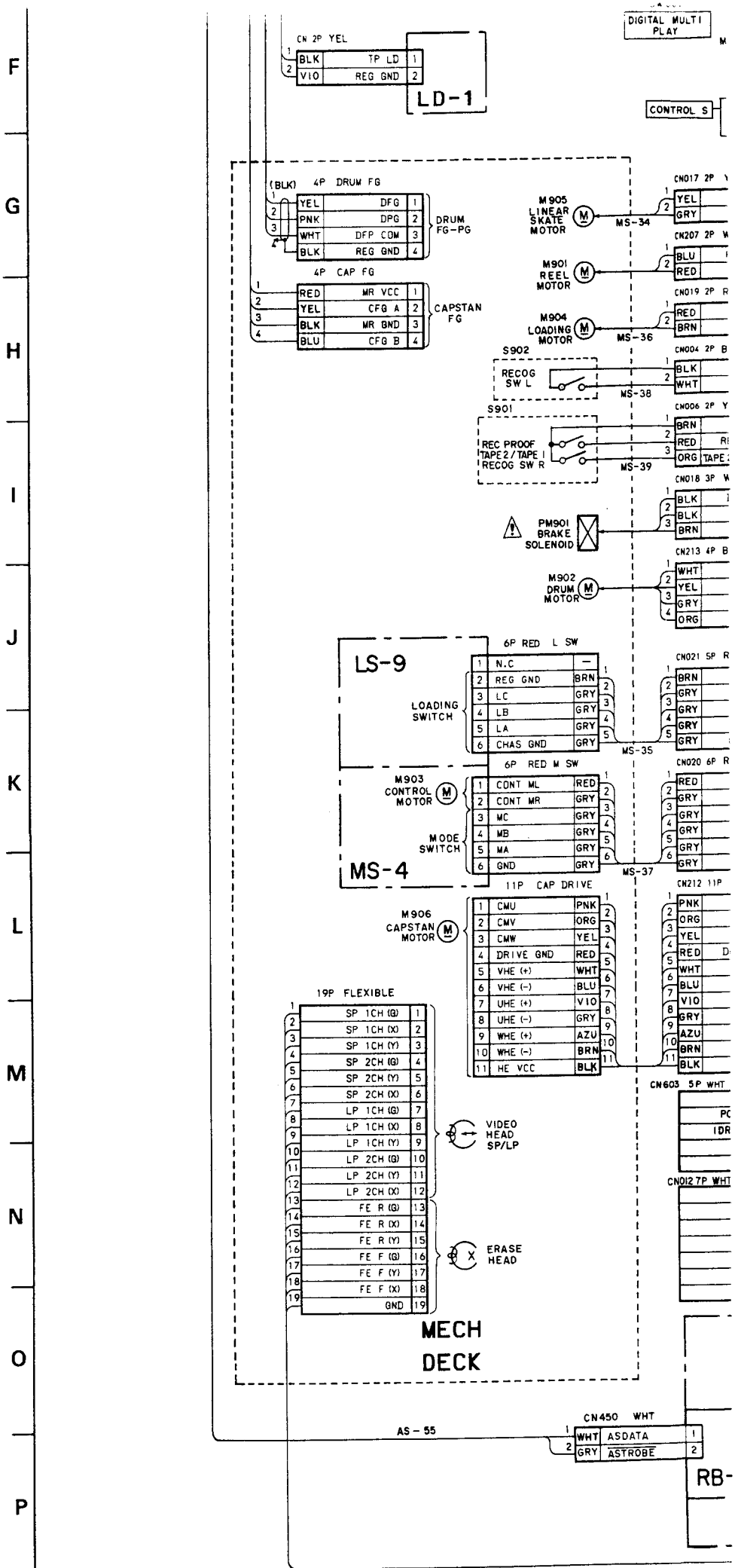
DIGITAL MULTI PLAY
CONTROL S
CN 2P YEL
BLK TP LD 1
VIO REG GND 2
LD-1
(BLK) 4P DRUM FG
YEL DFG 1
PNK DPG 2
WHT DFP COM 3
BLK REG GND 4
DRUM FG-PG
4P CAP FG
RED MR VCC 1
YEL CFG A 2
BLK MR GND 3
BLU CFG B 4
CAPSTAN FG
M905 LINEAR SKATE MOTOR
MS-34
CN017 2P
YEL
GRY
M901 REEL MOTOR
CN207 2P
BLU
RED
M904 LOADING MOTOR
MS-36
CN019 2P
RED
BRN
S902
RECOG SW L
MS-38
CN004 2P
BLK
WHT
S901
REC PROOF TAPE 2 / TAPE 1 RECOG SW R
MS-39
CN006 2P
BRN
RED
ORG
PM901 BRAKE SOLENOID
CN018 3P
BLK
BLK
BRN
M902 DRUM MOTOR
CN213 4P
WHT
YEL
GRY
ORG
LS-9
6P RED L SW
N.C
REG GND BRN
LC GRY
LB GRY
LA GRY
CHAS GND GRY
LOADING SWITCH
MS-35
CN021 5P
BRN
GRY
GRY
GRY
GRY
M903 CONTROL MOTOR
6P RED M SW
CONT ML RED
CONT MR GRY
MC GRY
MB GRY
MA GRY
GND GRY
MODE SWITCH
MS-4
MS-37
CN020 6P
RED
GRY
GRY
GRY
GRY
GRY
M906 CAPSTAN MOTOR
11P CAP DRIVE
CMU PNK
CMV ORG
CMW YEL
DRIVE GND RED
VHE (+) WHT
VHE (-) BLU
UHE (+) VIO
UHE (-) GRY
WHE (+) AZU
WHE (-) BRN
HE VCC BLK
CN212 11P
PNK
ORG
YEL
RED
WHT
BLU
VIO
GRY
AZU
BRN
BLK
19P FLEXIBLE
SP 1CH (G) 1
SP 1CH (X) 2
SP 1CH (Y) 3
SP 2CH (G) 4
SP 2CH (Y) 5
SP 2CH (X) 6
LP 1CH (G) 7
LP 1CH (X) 8
LP 1CH (Y) 9
LP 2CH (G) 10
LP 2CH (Y) 11
LP 2CH (X) 12
FE R (G) 13
FE R (X) 14
FE R (Y) 15
FE F (G) 16
FE F (Y) 17
FE F (X) 18
GND 19
VIDEO HEAD SP/LP
ERASE HEAD
MECH DECK
CN603 5P WHT
CN012 7P WHT
AS-55
CN450 WHT
WHT ASDATA 1
GRY ASTROBE 2
RB-

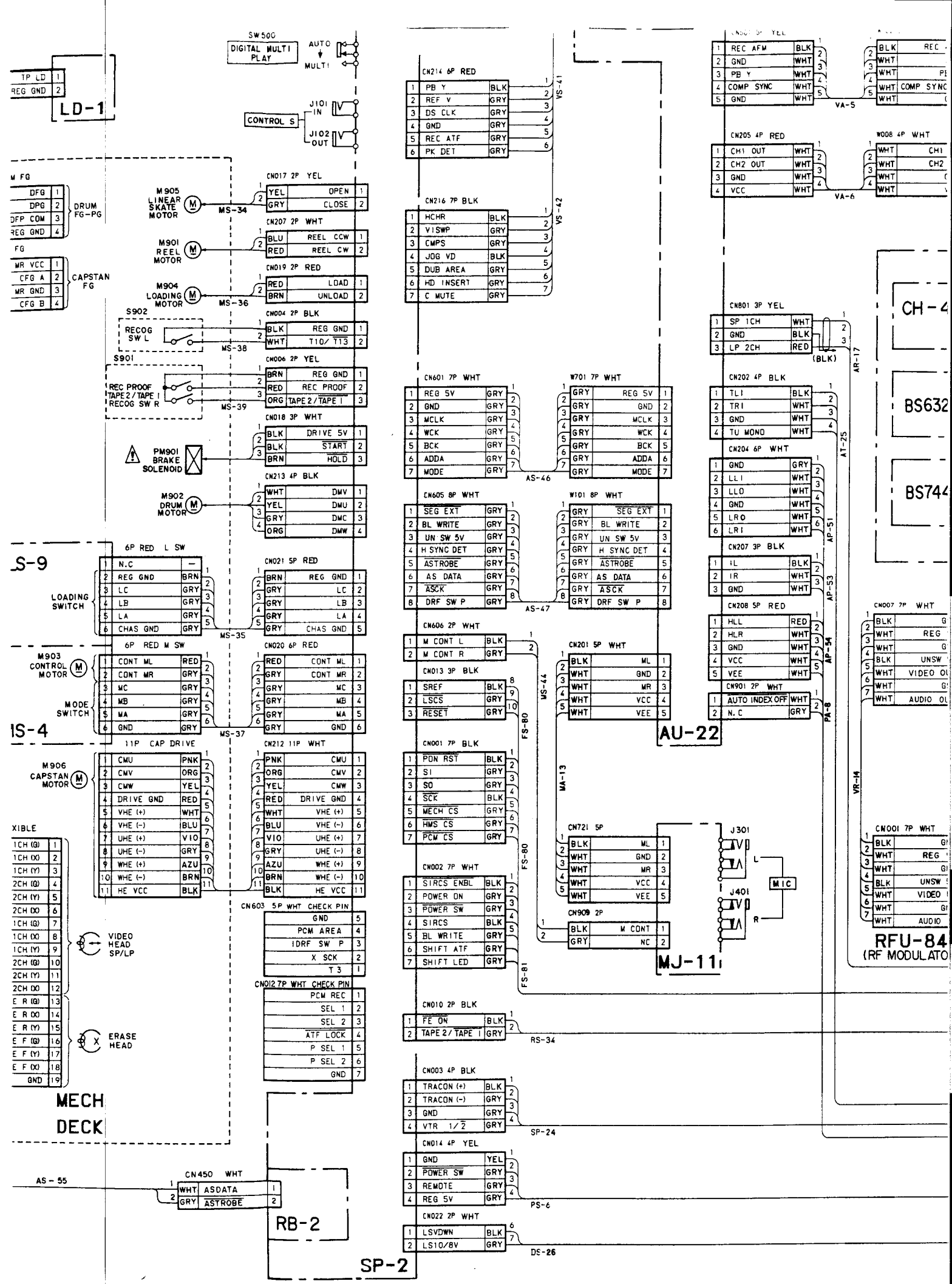
SW500
DIGITAL MULTI PLAY
AUTO MULTI
CONTROL S
J101 IN
J102 OUT
LD-1
TP LD
REG GND
M FG
DFG
DPG
DFP COM
REG GND
DRUM FG-PG
FG
MR VCC
CFG A
MR GND
CFG B
CAPSTAN FG
M905 LINEAR SKATE MOTOR
MS-34
CN017 2P YEL
YEL OPEN
GRY CLOSE
M901 REEL MOTOR
CN207 2P WHT
BLU REEL CCW
RED REEL CW
M904 LOADING MOTOR
MS-36
CN019 2P RED
RED LOAD
BRN UNLOAD
S902
RECOG SW L
MS-38
CN004 2P BLK
BLK REG GND
WHT T10/T13
S901
REC PROOF TAPE 2/TAPE 1 RECOG SW R
MS-39
CN006 2P YEL
BRN REG GND
RED REC PROOF
ORG TAPE 2/TAPE 1
PM901 BRAKE SOLENOID
CN018 3P WHT
BLK DRIVE 5V
BLK START
BRN HOLD
M902 DRUM MOTOR
CN213 4P BLK
WHT DMV
YEL DMU
GRY DMC
ORG DMW
S-9
LOADING SWITCH
6P RED L SW
N.C
REG GND
LC
LB
LA
CHAS GND
MS-35
CN021 5P RED
M903 CONTROL MOTOR
MODE SWITCH
6P RED M SW
CONT ML
CONT MR
MC
MB
MA
GND
MS-37
CN020 6P RED
IS-4
M906 CAPSTAN MOTOR
11P CAP DRIVE
CMU
CMV
CMW
DRIVE GND
VHE (+)
VHE (-)
UHE (+)
UHE (-)
WHE (+)
WHE (-)
HE VCC
CN212 11P WHT
XIBLE
1CH (G)
1CH (X)
1CH (Y)
2CH (G)
2CH (Y)
2CH (X)
E R (G)
E R (X)
E R (Y)
E F (G)
E F (Y)
E F (X)
GND
VIDEO HEAD SP/LP
ERASE HEAD
MECH DECK
CN603 5P WHT CHECK PIN
GND
PCM AREA
IDRF SW P
X SCK
T3
CN012 7P WHT CHECK PIN
PCM REC
SEL 1
SEL 2
ATF LOCK
P SEL 1
P SEL 2
GND
AS-55
CN450 WHT
ASDATA
ASTROBE
RB-2
SP-2
CN214 6P RED
PB Y
REF V
DS CLK
GND
REC ATF
PK DET
VS-41
CN216 7P BLK
HCHR
VISWP
CMPS
JOG VD
DUB AREA
HD INSERT
C MUTE
VS-42
CN601 7P WHT
REG 5V
GND
MCLK
WCK
BCK
ADDA
MODE
AS-46
W701 7P WHT
CN605 8P WHT
SEG EXT
BL WRITE
UN SW 5V
H SYNC DET
ASTROBE
AS DATA
ASCK
DRF SW P
AS-47
W101 8P WHT
CN606 2P WHT
M CONT L
M CONT R
CN013 3P BLK
SREF
LSCS
RESET
CN001 7P BLK
PON RST
SI
SO
SCK
MECH CS
HMS CS
PCM CS
CN002 7P WHT
SIRCS ENBL
POWER ON
POWER SW
SIRCS
BL WRITE
SHIFT ATF
SHIFT LED
FS-80
FS-81
MS-44
MA-13
CN201 5P WHT
ML
GND
MR
VCC
VEE
AU-22
CN721 5P
CN909 2P
M CONT
NC
MJ-11
J301
J401
L
R
MIC
CN010 2P BLK
FE ON
TAPE 2/TAPE 1
RS-34
CN003 4P BLK
TRACON (+)
TRACON (-)
GND
VTR 1/2
SP-24
CN014 4P YEL
GND
POWER SW
REMOTE
REG 5V
PS-6
CN022 2P WHT
LSVDWN
LS10/8V
DS-26
REC AFM
GND
PB Y
COMP SYNC
VA-5
CN205 4P RED
CH1 OUT
CH2 OUT
VA-6
W008 4P WHT
CN801 3P YEL
SP 1CH
LP 2CH
(BLK)
AR-17
CN202 4P BLK
TLI
TRI
TU MOND
AT-25
CN204 6P WHT
LLI
LLO
LRO
LRI
AP-51
CN207 3P BLK
IL
IR
AP-53
CN208 5P RED
HLL
HLR
AP-54
CN901 2P WHT
AUTO INDEX OFF
PA-8
VR-14
CH-4
BS632
BS744
CN007 7P WHT
REG
UNSW
VIDEO OU
AUDIO OU
CN0001 7P WHT
RFU-84
(RF MODULATO

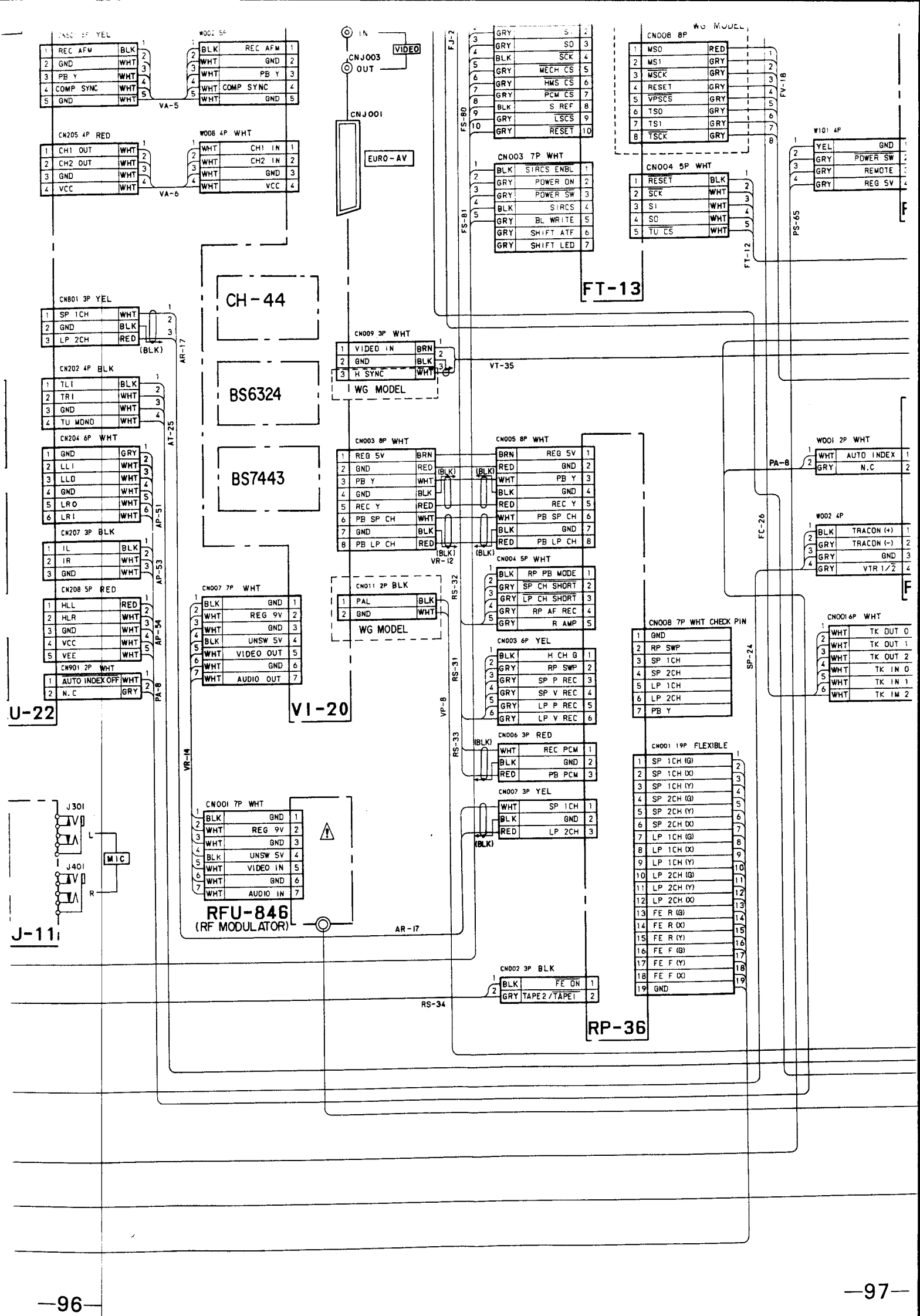

CN801 5P YEL
REC AFM
GND
PB Y
COMP SYNC
GND
W002 5P
REC AFM
GND
PB Y
COMP SYNC
GND
VA-5
CN205 4P RED
CH1 OUT
CH2 OUT
GND
VCC
W008 4P WHT
CH1 IN
CH2 IN
GND
VCC
VA-6
IN
VIDEO
CNJ003
OUT
CNJ001
EURO-AV
FJ-2
FS-80
FS-81
GRY
SI
SO
SCK
MECH CS
HMS CS
PCM CS
S REF
LSCS
RESET
CN003 7P WHT
SIRCS ENBL
POWER ON
POWER SW
SIRCS
BL WRITE
SHIFT ATF
SHIFT LED
FT-13
WG MODEL
CN008 8P
MS0
MS1
MSCK
RESET
VPSCS
TS0
TS1
TSCK
FV-18
CN004 5P WHT
RESET
SCK
SI
SO
TU CS
FT-12
W101 4P
YEL
GND
POWER SW
REMOTE
REG 5V
PS-65
CH-44
BS6324
BS7443
CN801 3P YEL
SP 1CH
GND
LP 2CH
(BLK)
AR-17
CN202 4P BLK
TLI
TRI
GND
TU MONO
AT-25
CN204 6P WHT
GND
LLI
LLO
GND
LRO
LRI
AP-51
CN207 3P BLK
IL
IR
GND
AP-53
CN208 5P RED
HLL
HLR
GND
VCC
VEE
AP-54
CN901 2P WHT
AUTO INDEX OFF
N.C
PA-8
U-22
CN009 3P WHT
VIDEO IN
GND
H SYNC
WG MODEL
VT-35
CN003 8P WHT
REG 5V
GND
PB Y
GND
REC Y
PB SP CH
GND
PB LP CH
VR-12
CN005 8P WHT
REG 5V
GND
PB Y
GND
REC Y
PB SP CH
GND
PB LP CH
CN004 5P WHT
RP PB MODE
SP CH SHORT
LP CH SHORT
RP AF REC
R AMP
CN011 2P BLK
PAL
GND
WG MODEL
RS-32
CN007 7P WHT
GND
REG 9V
GND
UNSW 5V
VIDEO OUT
GND
AUDIO OUT
VI-20
CN003 6P YEL
H CH G
RP SWP
SP P REC
SP V REC
LP P REC
LP V REC
RS-31
VP-8
CN006 3P RED
REC PCM
GND
PB PCM
RS-33
CN007 3P YEL
SP 1CH
GND
LP 2CH
CN008 7P WHT CHECK PIN
GND
RP SWP
SP 1CH
SP 2CH
LP 1CH
LP 2CH
PB Y
SP-24
CN001 19P FLEXIBLE
SP 1CH (G)
SP 1CH (X)
SP 1CH (Y)
SP 2CH (G)
SP 2CH (Y)
SP 2CH (X)
LP 1CH (G)
LP 1CH (X)
LP 1CH (Y)
LP 2CH (G)
LP 2CH (Y)
LP 2CH (X)
FE R (G)
FE R (X)
FE R (Y)
FE F (G)
FE F (Y)
FE F (X)
GND
W001 2P WHT
AUTO INDEX
N.C
PA-8
FC-26
W002 4P
TRACON (+)
TRACON (-)
GND
VTR 1/2
CN001 6P WHT
TK OUT 0
TK OUT 1
TK OUT 2
TK IN 0
TK IN 1
TK IM 2
J301
J401
MIC
J-11
CN001 7P WHT
GND
REG 9V
GND
UNSW 5V
VIDEO IN
GND
AUDIO IN
RFU-846
(RF MODULATOR)
AR-17
CN002 3P BLK
FE ON
TAPE2/TAPE1
RS-34
RP-36

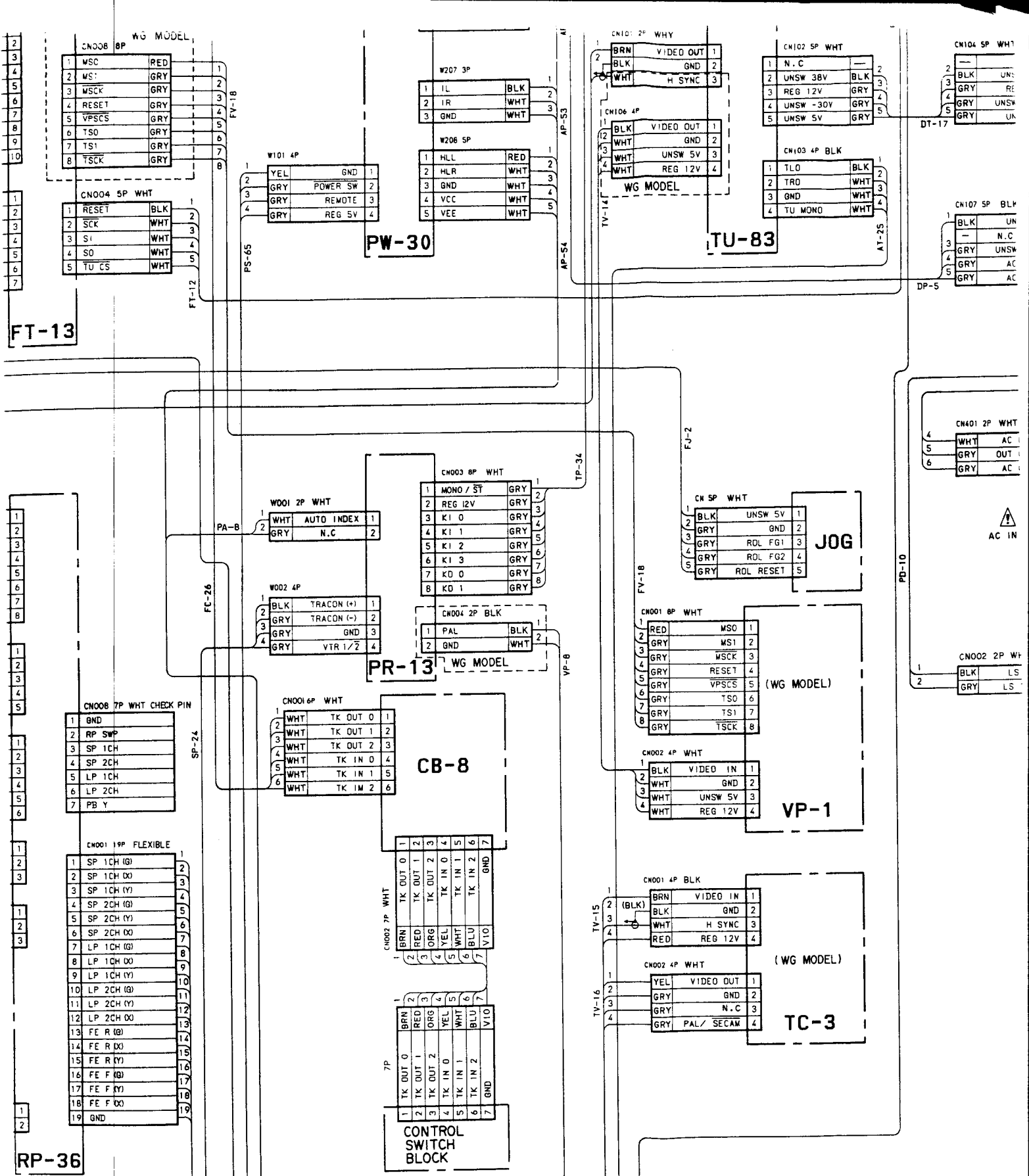


Note: The comp
⚠ are cr
part numb



FRAME FRAME

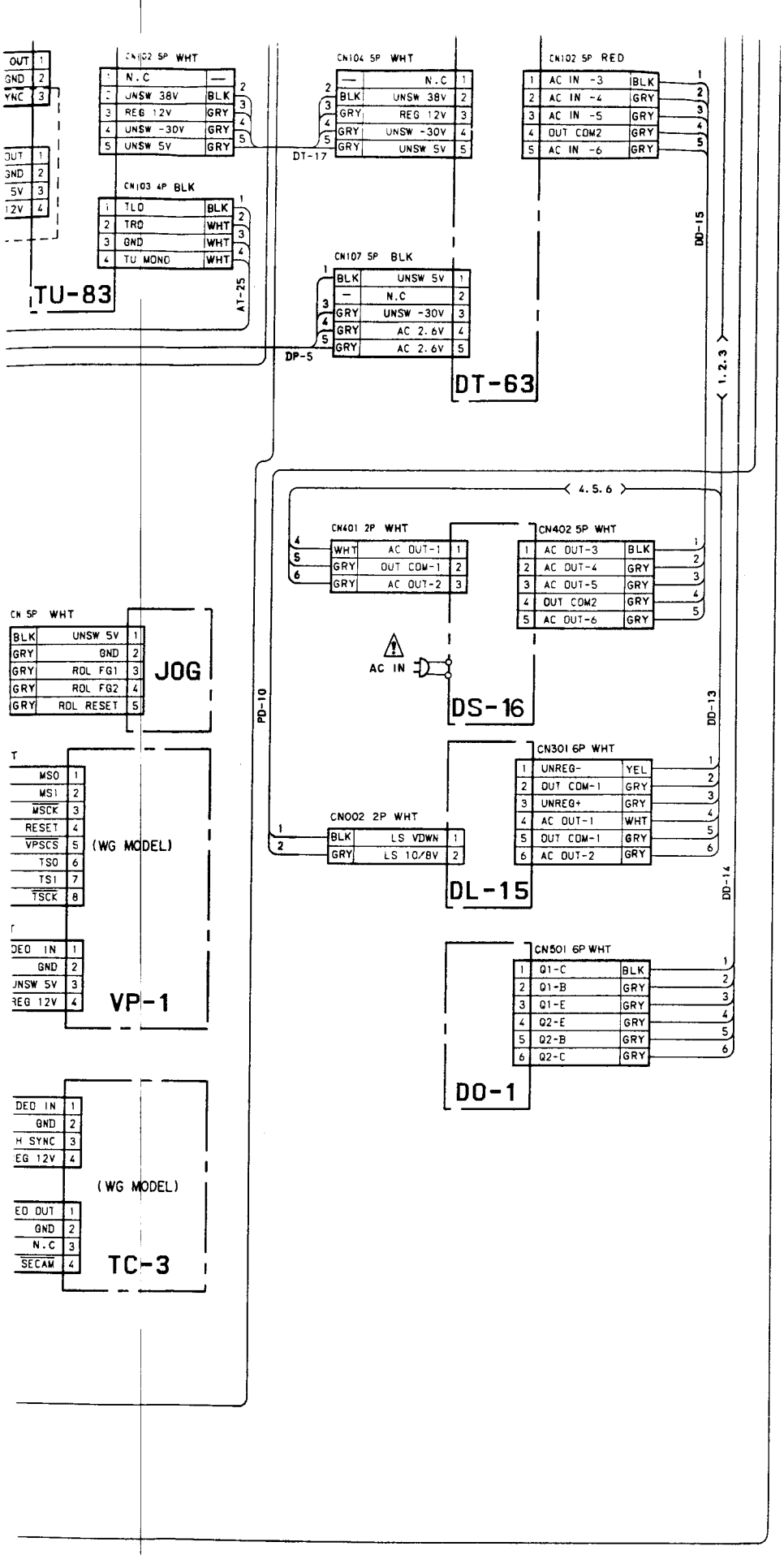


**Note: The components identified by shading and mark ⚠ are critical for safety. Replace only with part number specified.**

## 4-2. PRINTED WIRING BOARDS AND SCHEMATIC DIAGRAM

**Note:**

- ○— : indicates a lead wire mounted on the component side.
- ●— : indicates a lead wire mounted on the printed side.
- ⊗ : Through hole.
- : Pattern from the side which enables seeing.
- : Pattern of the rear side.
- : B+ pattern from the side which enables seeing.

- Digital transistor (RP-36:Q103,Q105,Q203,Q302,Q303) transistor with resistors.
  Refer to the RP-36 board schematic diagram for digital transistor

When indicating parts by reference number, please include the board name.

**Caution:**

Pattern face side: (Solder Side) Parts on the pattern face side seen from the pattern face are indicated.

Parts face side: (Component Side) Parts on the parts face side seen from the parts face are indicated.

RP-36(HEAD AMP/FLYING ERASE)

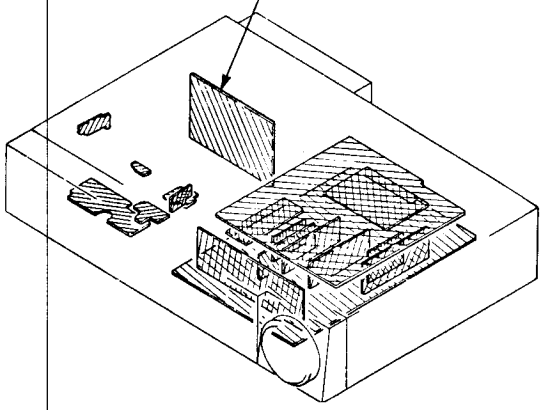

## RP-36(HEAD AMP/FLYING ERASE) PRINTED

—Ref. No. RP-36 BOARD : 1,000 series—

| | |
|---|---|
| D101 | C-5 |
| IC001 | C-4 |
| IC002 | C-7 |
| Q101 | E-15 |
| Q102 | E-17 |
| Q103 | C-3 |
| Q104 | C-5 |
| Q105 | C-15 |
| Q201 | E-11 |
| Q202 | E-14 |
| Q203 | C-6 |
| Q301 | C-11 |
| Q302 | B-8 |
| Q303 | C-5 |
| Q304 | C-8 |
| Q307 | A-1 |
| Q308 | A-1 |
| Q402 | D-18 |
| Q403 | E-1 |
| Q404 | E-2 |
| RV101 | A-4 |
| RV102 | A-2 |
| RV201 | A-8 |
| RV202 | A-7 |

**RP-36** BOARD (COMPON

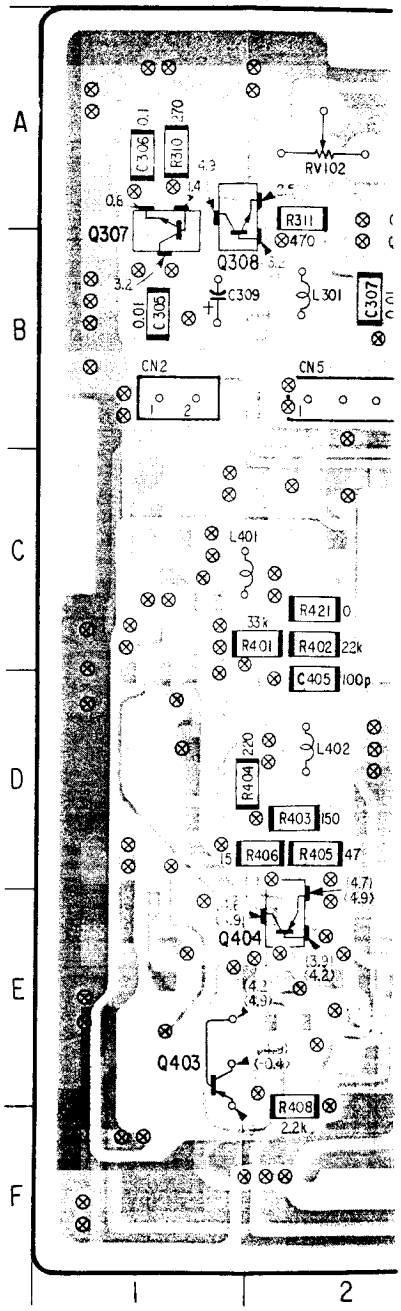

## P-36 BOARD (COMPONENT SIDE)

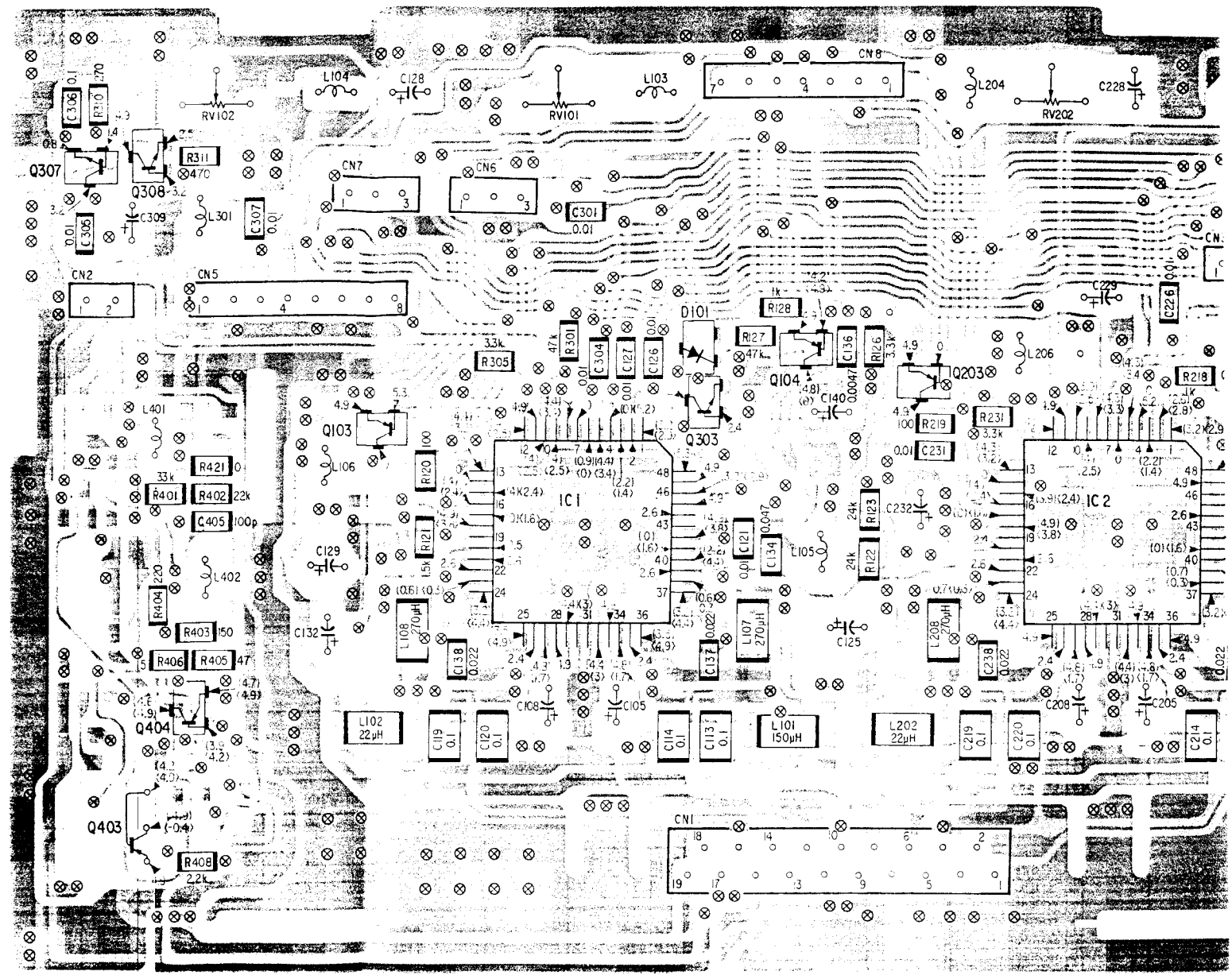

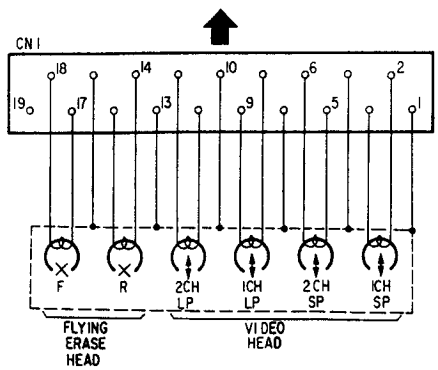




DEO(1) VIDEO(1)

## RP-36 BOARD (SOLDER SIDE)

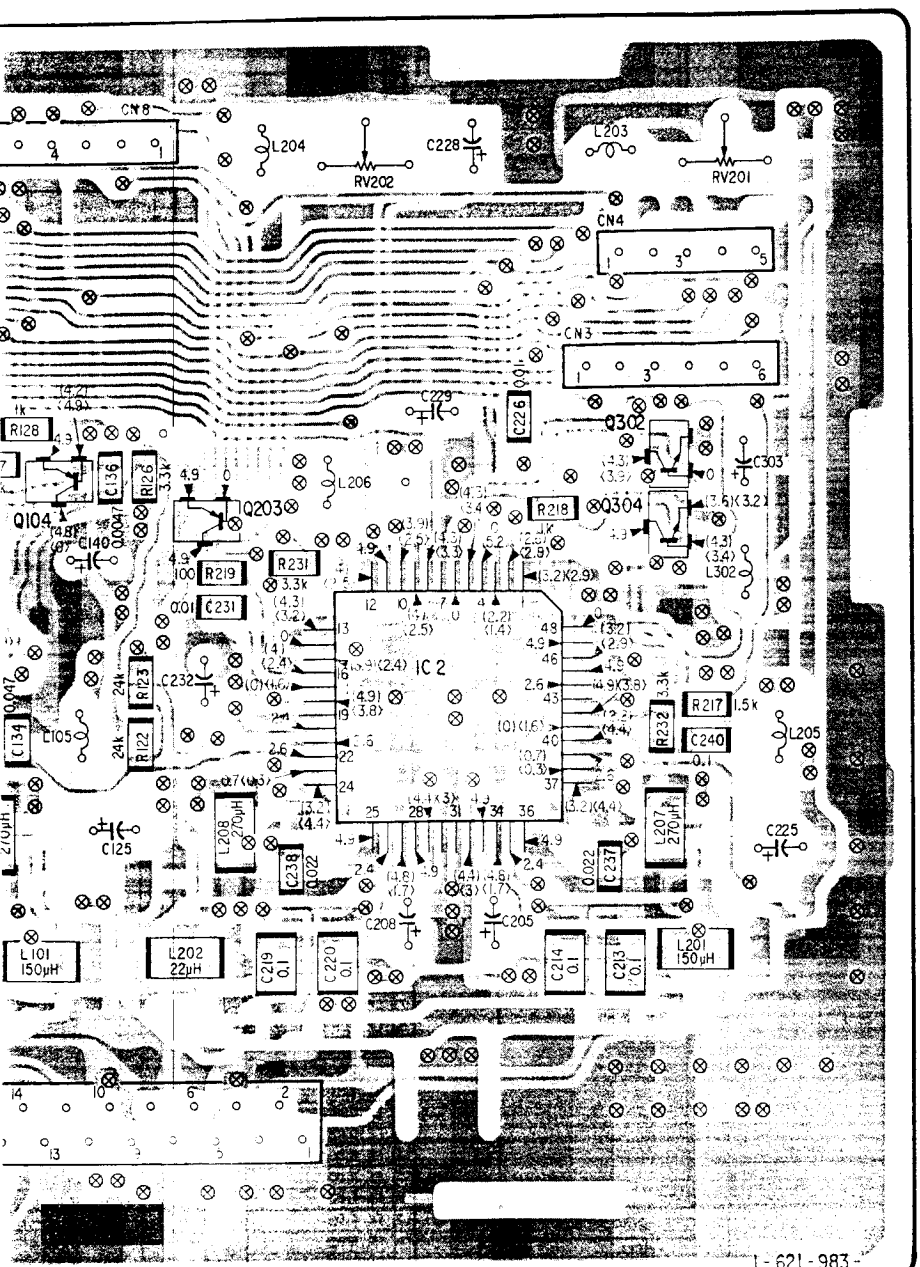


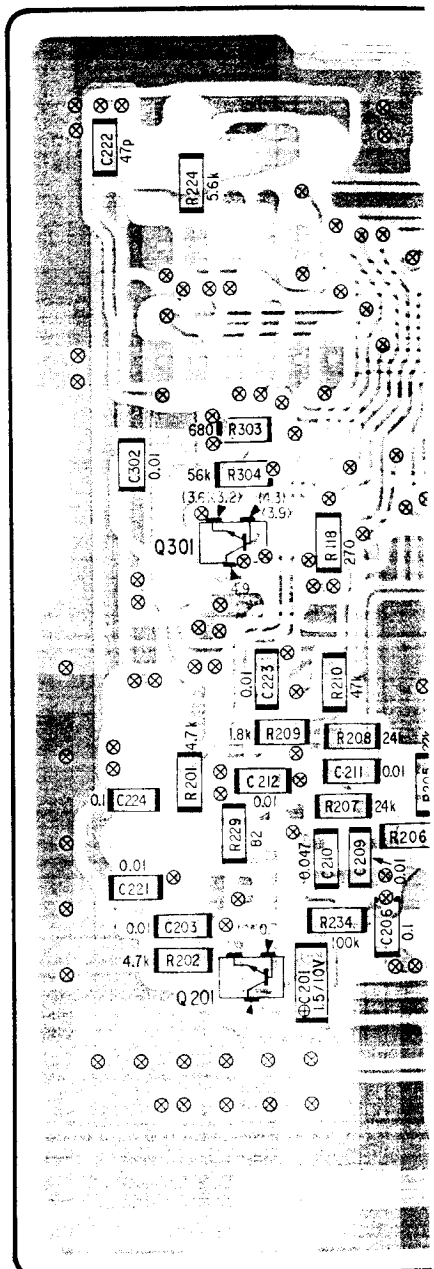


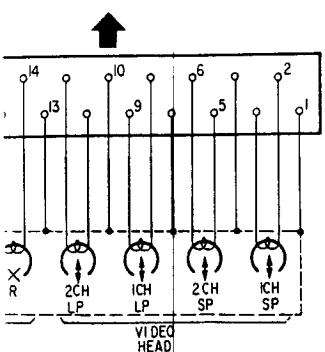

**RP-36** BOARD (SOLDER SIDE)

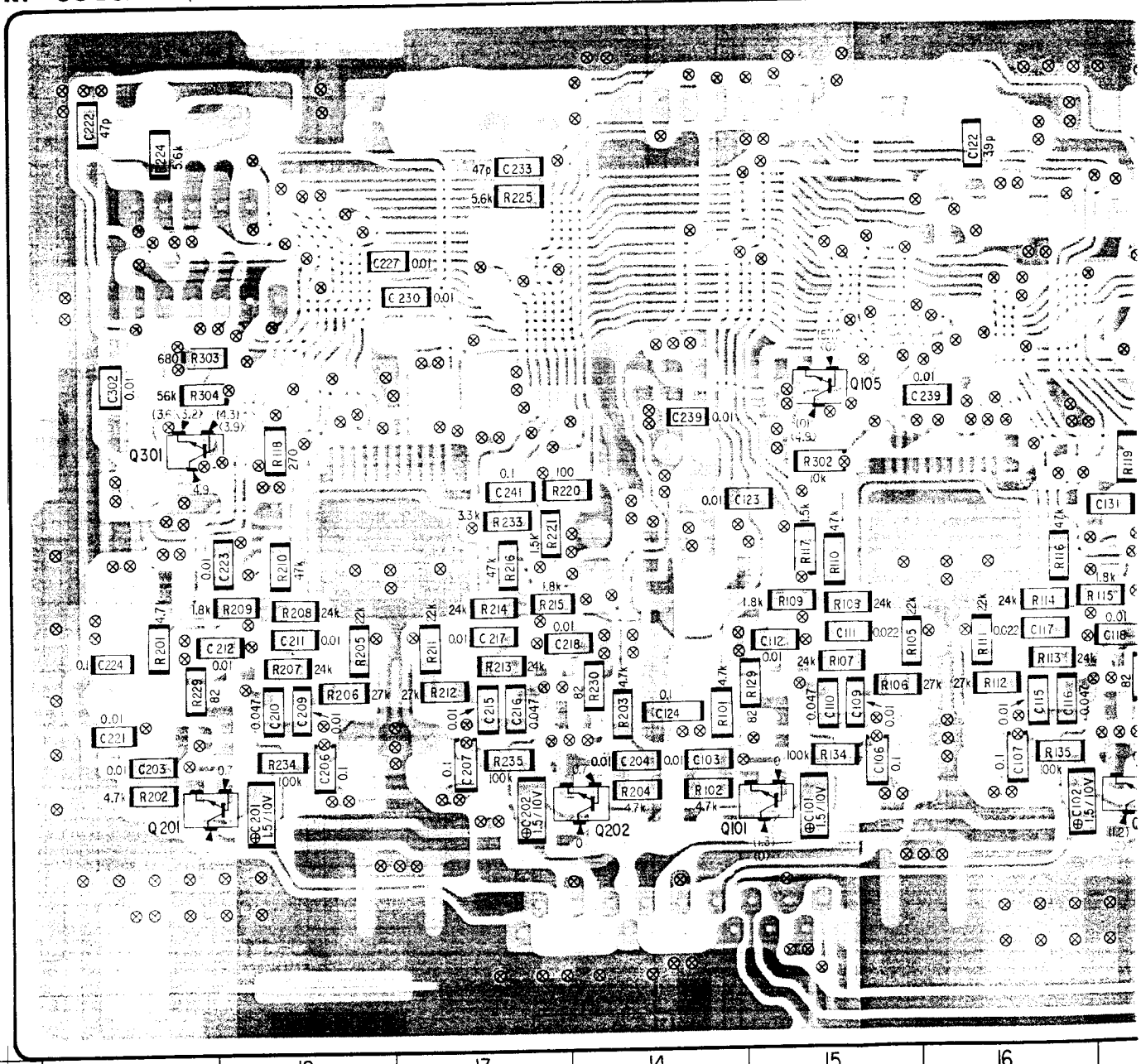




VIDEO(1) VIDEO(1)

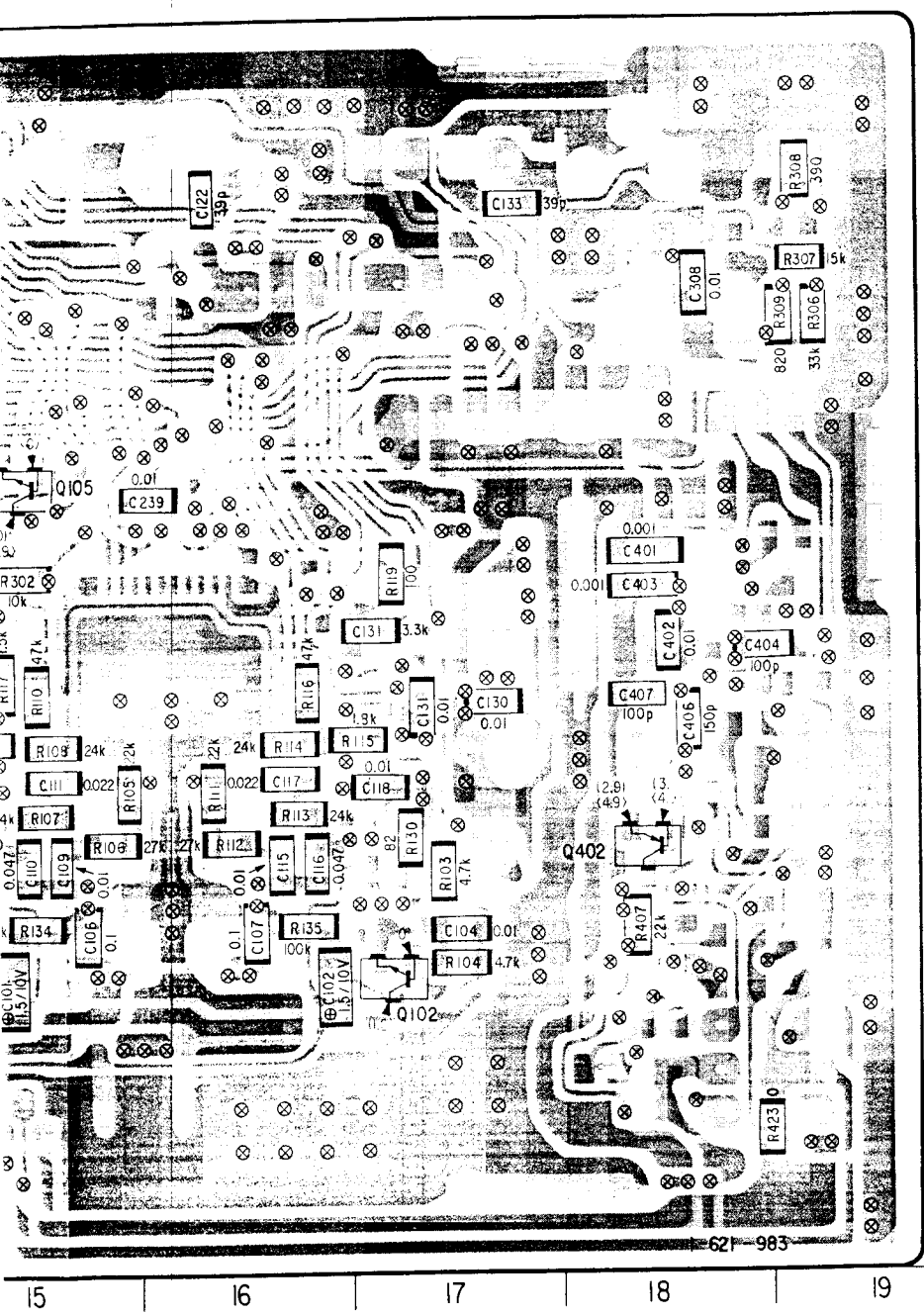


no mark : LP REC / PB mode
( ) : LP REC mode
( ) : LP PB mode



1) VIDEO(1)

## P-36(HEAD AMP/FLYING ERASE) SCHEMATIC DIAGRAM

Ref. No. RP-36 BOARD : 1,000 series—

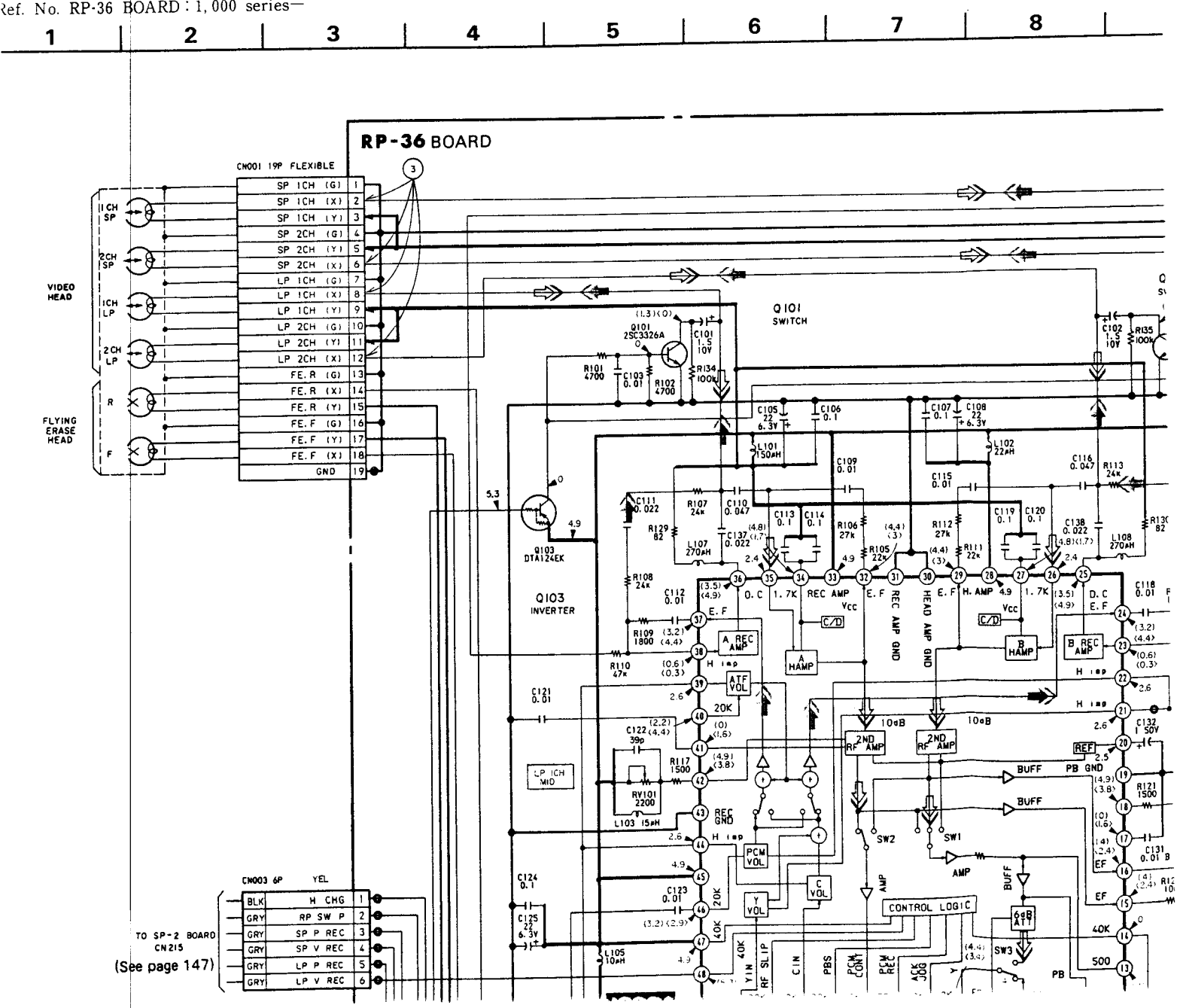

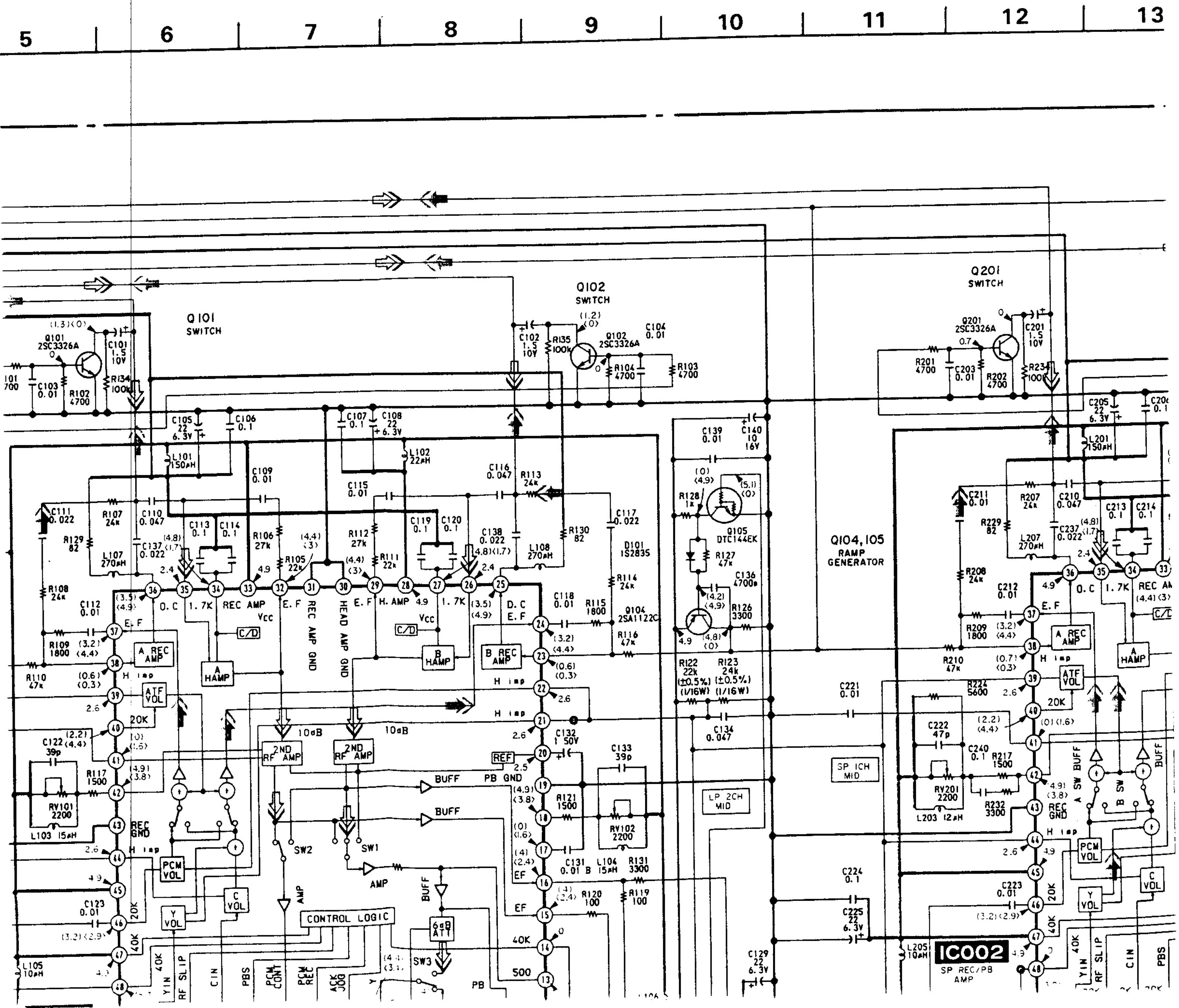

5
6
7
8
9
10
11
12
13
Q101
SWITCH
Q101
2SC3326A
Q102
SWITCH
Q102
2SC3326A
Q201
SWITCH
Q201
2SC3326A
Q104,105
RAMP
GENERATOR
Q104
2SA1122C
Q105
DTC144EK
D101
1S2835
REC AMP
HEAD AMP GND
REC AMP GND
A REC AMP
B REC AMP
A HAMP
B HAMP
ATF VOL
2ND RF AMP
BUFF
PB GND
AMP
SW1
SW2
SW3
6dB ATT
CONTROL LOGIC
PCM VOL
Y VOL
C VOL
SP 1CH MID
LP 2CH MID
IC002
SP REC/PB AMP

10 | 11 | 12 | 13 | 14 | 15 | 16 | 17

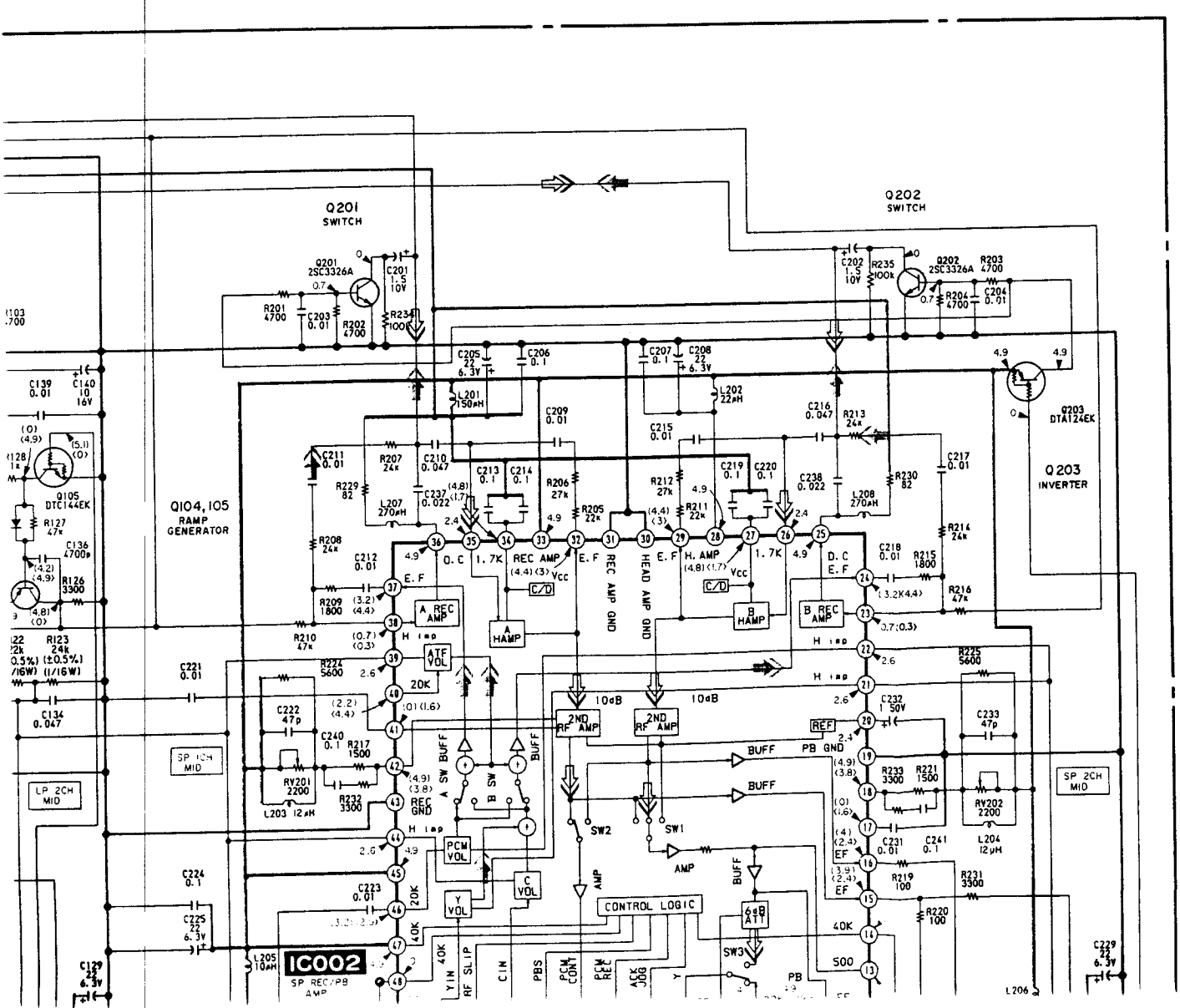

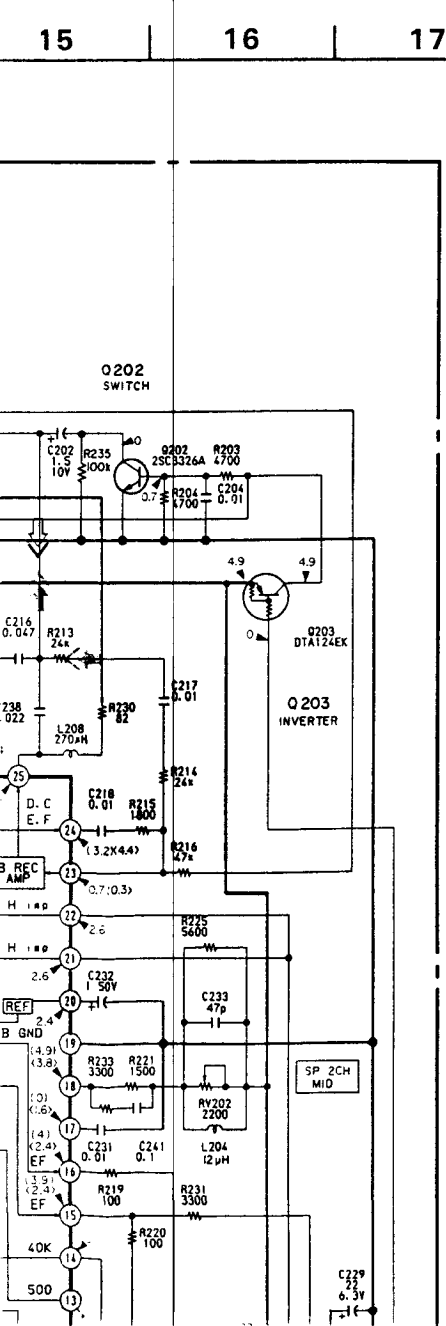


**Note:**

- Caution when replacing chip parts.
  New parts must be attached after removal of chip.
  Be careful not to heat the minus side of tantalum capacitor, because it is damaged by the heat.
- All resistors are in ohms, 1/10W unless otherwise noted.
  kΩ: 1000Ω, MΩ: 1000kΩ.
- All capacitors are in μF unless otherwise noted. pF : μμF.
  50V or less are not indicated except for electrolytice. and tantalums.
- All variable and adjustable resistors have characteristic curve B, unless otherwise noted.
- ▭ : adjustment for repair.
- ▬ : B + bus.
- Voltages are dc with respect to ground unless otherwise noted.
- Readings are taken with a colour-bar signal input.
- Readings are taken with a digital multimeter (DC10MΩ).
- Voltage variations may be noted due to normal production tolerances.

When indicating parts by reference number, please include the board name.

- **Signal path**
  ➡ : REC Y/CHROMA Signal
  ⇨ : PB Y/CHROMA Signal

## RP-36 BOARD

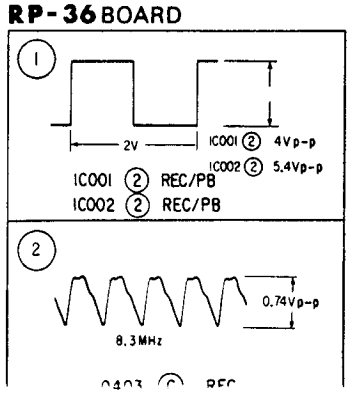

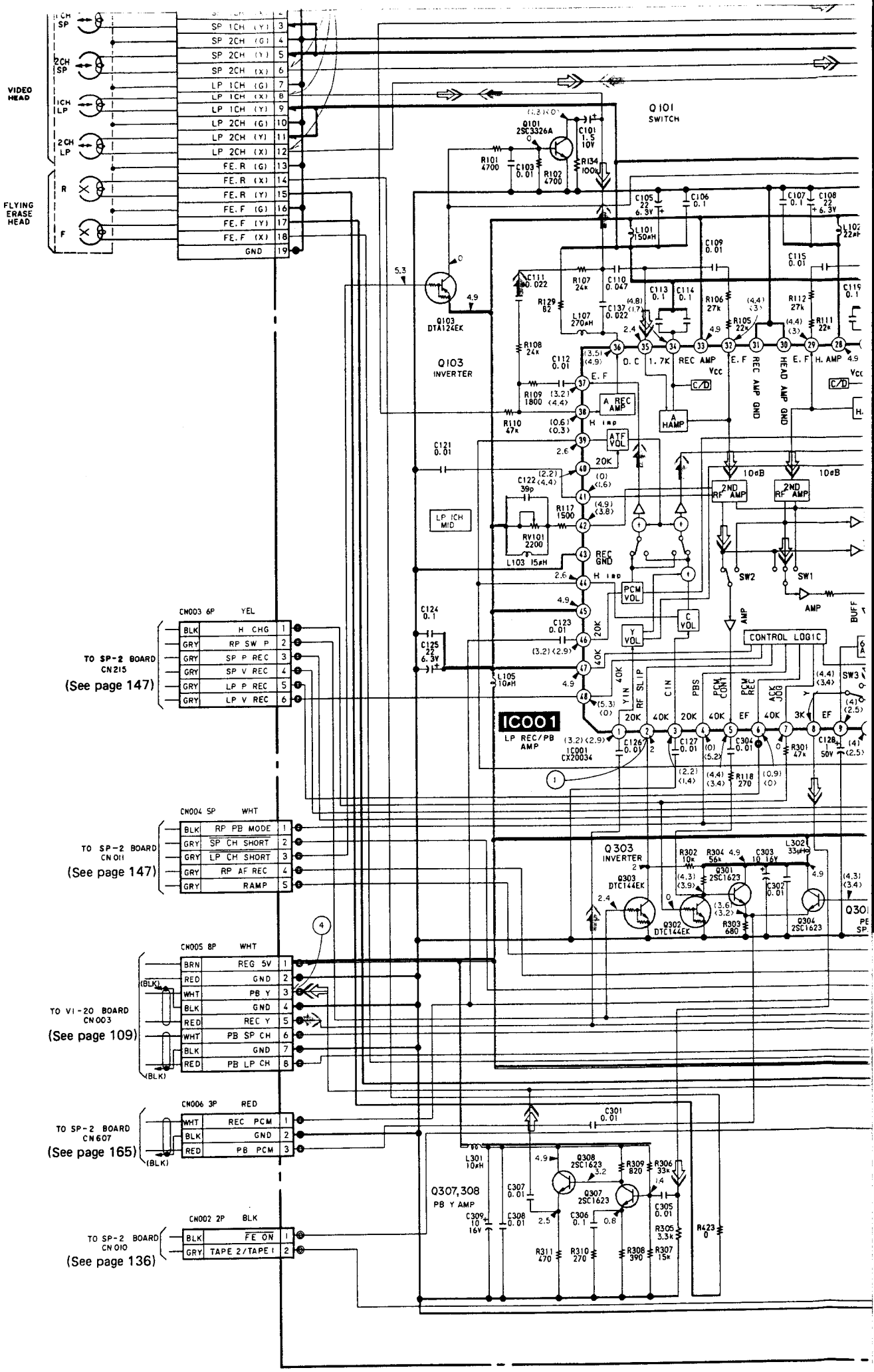
VIDEO HEAD
FLYING ERASE HEAD
SP 1CH (Y) 3
SP 2CH (G) 4
SP 2CH (Y) 5
SP 2CH (X) 6
LP 1CH (G) 7
LP 1CH (X) 8
LP 1CH (Y) 9
LP 2CH (G) 10
LP 2CH (Y) 11
LP 2CH (X) 12
FE.R (G) 13
FE.R (X) 14
FE.R (Y) 15
FE.F (G) 16
FE.F (Y) 17
FE.F (X) 18
GND 19
Q101 SWITCH
Q101 2SC3326A
Q103 DTA124EK
Q103 INVERTER
REC AMP
E. F
H. AMP
A REC AMP
A HAMP
ATF VOL
PCM VOL
C VOL
Y VOL
2ND RF AMP
10dB
LP 1CH MID
REC GND
CONTROL LOGIC
SW1
SW2
IC001
LP REC/PB AMP
CX20034
Q303 INVERTER
Q303 DTC144EK
Q301 2SC1623
Q302 DTC144EK
Q304 2SC1623
Q307,308 PB Y AMP
Q307 2SC1623
Q308 2SC1623
CN003 6P YEL
BLK H CHG 1
GRY RP SW P 2
GRY SP P REC 3
GRY SP V REC 4
GRY LP P REC 5
GRY LP V REC 6
TO SP-2 BOARD CN215
(See page 147)
CN004 SP WHT
BLK RP PB MODE 1
GRY SP CH SHORT 2
GRY LP CH SHORT 3
GRY RP AF REC 4
GRY RAMP 5
TO SP-2 BOARD CN011
(See page 147)
CN005 8P WHT
BRN REG 5V 1
RED GND 2
WHT PB Y 3
BLK GND 4
RED REC Y 5
WHT PB SP CH 6
BLK GND 7
RED PB LP CH 8
TO VI-20 BOARD CN003
(See page 109)
CN006 3P RED
WHT REC PCM 1
BLK GND 2
RED PB PCM 3
TO SP-2 BOARD CN607
(See page 165)
CN002 2P BLK
BLK FE ON 1
GRY TAPE 2/TAPE 1 2
TO SP-2 BOARD CN010
(See page 136)

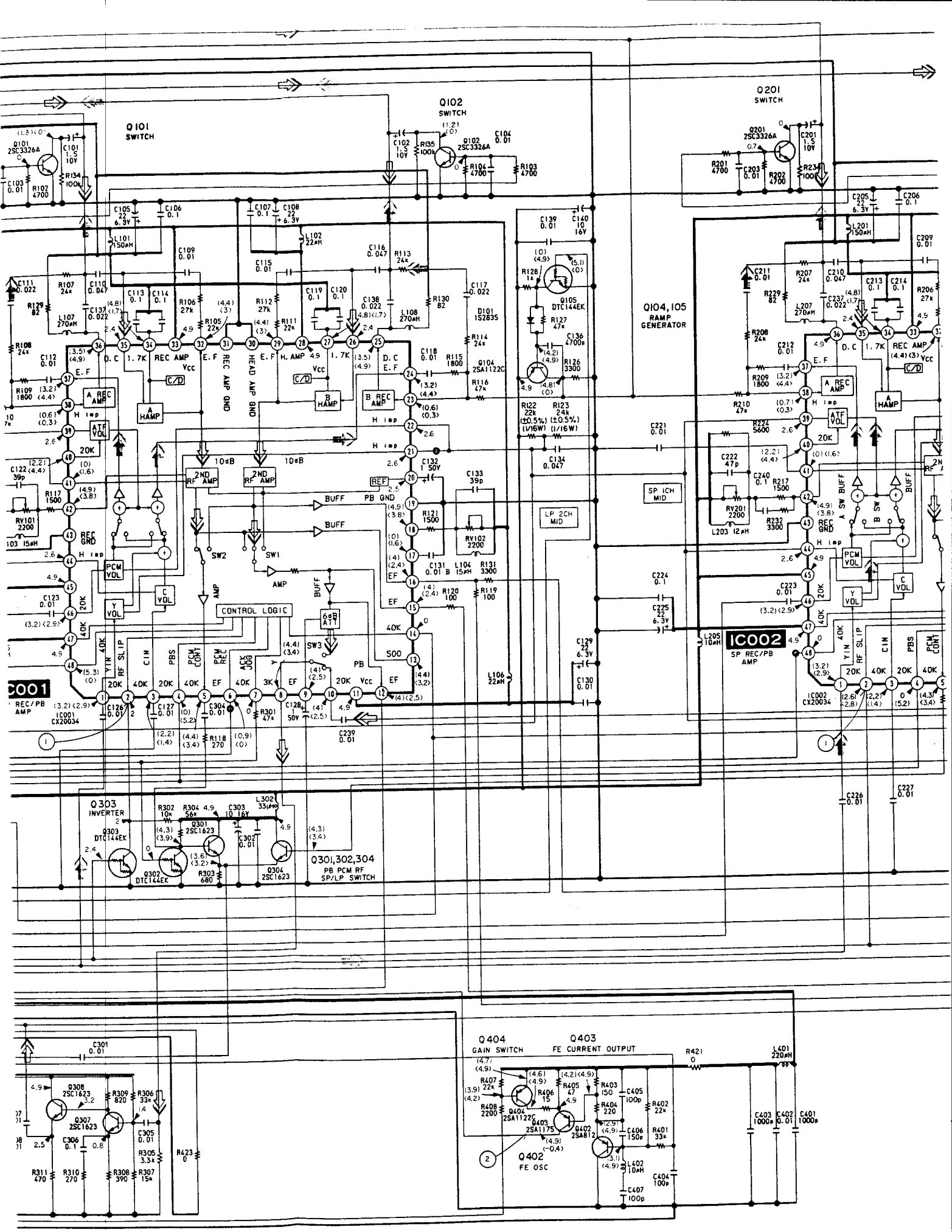
Q101
SWITCH
Q102
SWITCH
Q201
SWITCH
Q104,105
RAMP
GENERATOR
IC002
SP REC/PB
AMP
IC001
REC/PB
AMP
Q303
INVERTER
Q301,302,304
PB PCM RF
SP/LP SWITCH
Q404
GAIN SWITCH
Q403
FE CURRENT OUTPUT
Q402
FE OSC
CONTROL LOGIC
SP 1CH
MID
LP 2CH
MID
REC AMP
A REC AMP
B REC AMP
A HAMP
B HAMP
ATF VOL
PCM VOL
C VOL
Y VOL
2ND RF AMP
REC GND
PB GND
BUFF
AMP
SW1
SW2
SW3
6dB ATT
REF
D.C
E.F
H. AMP
1.7K
10dB
20K
40K
500
EF
PB
Vcc
C/D
YIN
RF SLIP
CIN
PBS
PCM CONT
PCM REC
ACK JOG
A SW BUFF
B SW
Q101 2SC3326A
Q102 2SC3326A
Q201 2SC3326A
Q105 DTC144EK
Q104 2SA1122C
Q303 DTC144EK
Q302 DTC144EK
Q301 2SC1623
Q304 2SC1623
Q308 2SC1623
Q307 2SC1623
Q404 2SA1122C
Q403 2SA1175
Q402 2SA812
D101 1S2835
RV101 2200
RV102 2200
RV201 2200
L203 12μH
L101 150μH
L102 22μH
L104 15μH
L106 22μH
L201 150μH
L205 10μH
L401 220μH
L402 10μH
L302 33μH
R421 0
R423 0

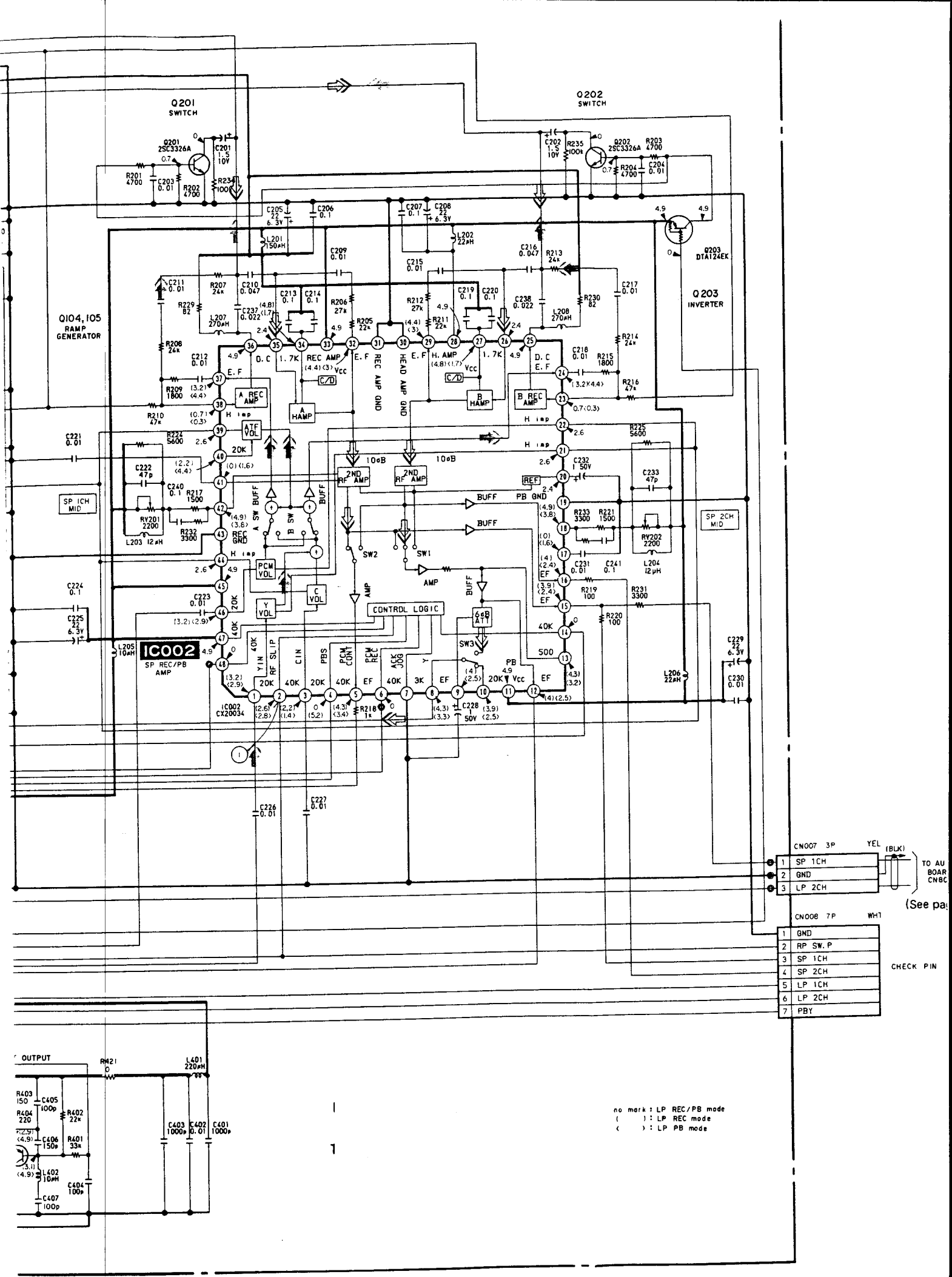
Q201
SWITCH
Q202
SWITCH
Q203
INVERTER
Q104, 105
RAMP
GENERATOR
IC002
SP REC/PB
AMP
CONTROL LOGIC
REC AMP
REC AMP GND
HEAD AMP GND
2ND RF AMP
2ND RF AMP
10dB
10dB
A REC AMP
B REC AMP
A HAMP
B HAMP
ATF VOL
PCM VOL
C VOL
Y VOL
6dB ATT
SW1
SW2
SW3
A SW BUFF
B SW BUFF
BUFF
AMP
REF
SP 1CH MID
SP 2CH MID
CN007 3P
1 SP 1CH
2 GND
3 LP 2CH
YEL
(BLK)
TO AU BOAR CN8C
(See pa
CN008 7P
WHT
1 GND
2 RP SW. P
3 SP 1CH
4 SP 2CH
5 LP 1CH
6 LP 2CH
7 PBY
CHECK PIN
OUTPUT
no mark : LP REC/PB mode
( ) : LP REC mode
( ) : LP PB mode

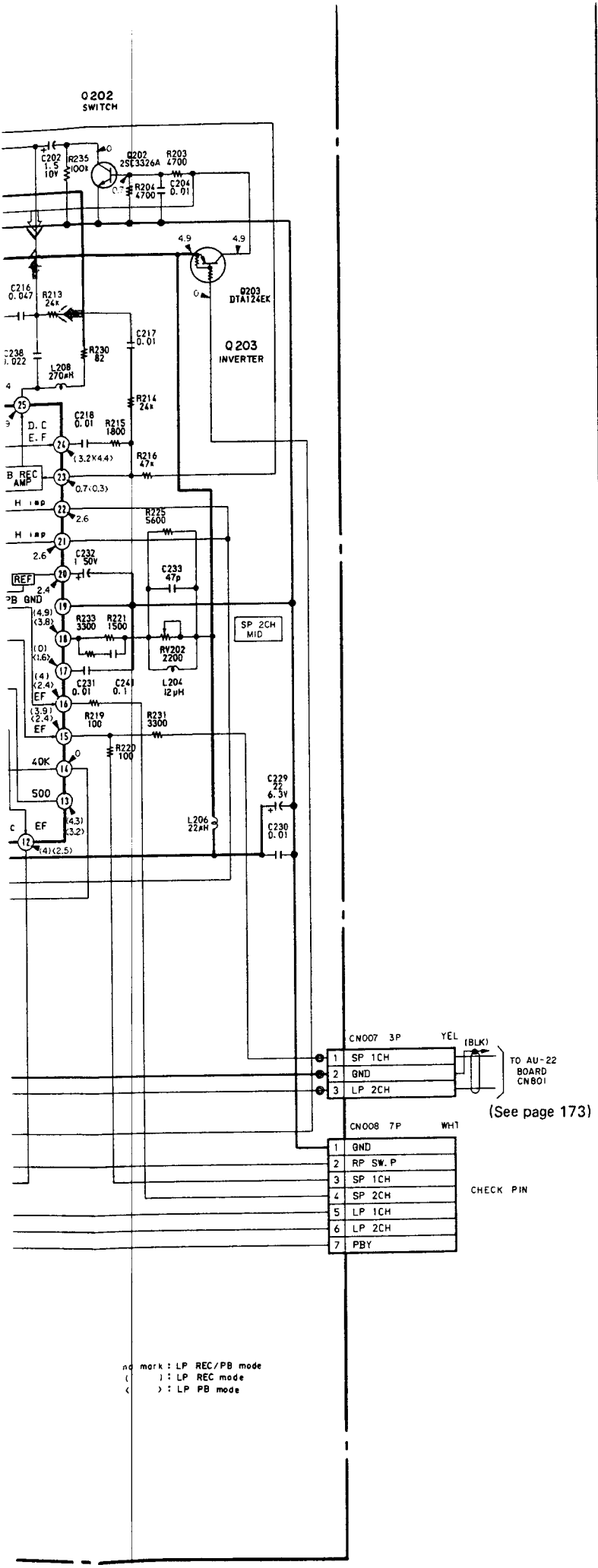


50V or less are not indicated except for electrolytice. and tantalums.

- All variable and adjustable resistors have characteristic curve B, unless otherwise noted.
- ▭ : adjustment for repair.
- ——— : B + bus.
- Voltages are dc with respect to ground unless otherwise noted.
- Readings are taken with a colour-bar signal input.
- Readings are taken with a digital multimeter (DC10MΩ).
- Voltage variations may be noted due to normal production tolerances.

When indicating parts by reference number, please include the board name.

- **Signal path**
  - ➡ : REC Y/CHROMA Signal
  - ⇨ : PB Y/CHROMA Signal

**RP-36 BOARD**

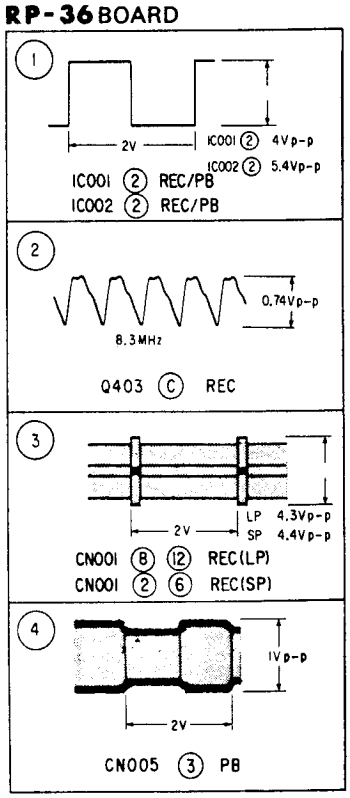




VIDEO(1)

**Note:**

- ○— : indicates a lead wire mounted on the component side.
- ●— : indicates a lead wire mounted on the printed side.
- : soldering side.
- : B+ Pattern.

When indicating parts by reference number, please include the board name.

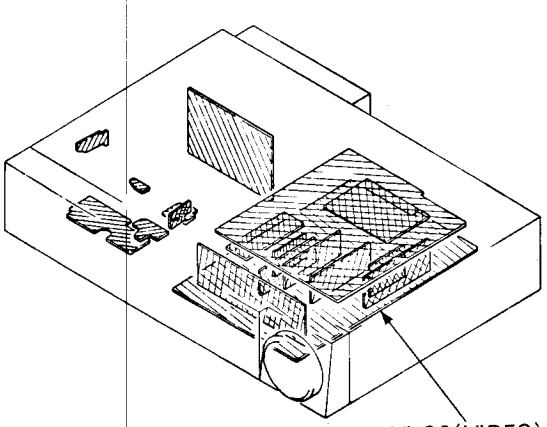

VI-20(VIDEO)

| | | | | | |
|---|---|---|---|---|---|
| D004 | E-3 | | Q101 | F-4 | |
| D005 | F-5 | | Q102 | F-5 | |
| D100 | F-5 | | Q103 | I-1 | |
| D202 | G-8 | | Q104 | H-1 | |
| D204 | F-13 | | Q106 | F-2 | |
| D205 | G-13 | | Q107 | E-2 | |
| D206 | H-13 | | Q110 | D-4 | |
| D301 | F-12 | | Q113 | D-4 | |
| D302 | E-13 | | Q201 | E-6 | |
| D303 | D-13 | | Q202 | H-11 | |
| D304 | C-12 | | Q203 | G-9 | |
| D305 | B-7 | | Q204 | G-9 | |
| D402 | A-5 | | Q205 | F-8 | |
| D403 | A-5 | | Q206 | G-8 | |
| D410 | A-2 | | Q207 | F-11 | |
| D411 | A-2 | | Q208 | F-12 | |
| D412 | B-2 | | Q209 | F-10 | |
| D413 | C-1 | | Q211 | G-9 | |
| D414 | F-1 | | Q215 | G-11 | |
| D415 | F-1 | | Q216 | G-10 | |
| D416 | E-1 | | Q217 | F-13 | |
| D417 | F-1 | | Q218 | G-13 | |
| D418 | D-1 | | Q219 | F-13 | |
| D419 | C-1 | | Q220 | G-13 | |
| | | | Q221 | H-13 | |
| IC001 | H-4 | | Q222 | H-13 | |
| IC002 | H-10 | | Q301 | E-9 | |
| IC003 | B-12 | | Q302 | E-8 | |
| IC004 | B-8 | | Q304 | D-11 | |
| IC005 | D-12 | | Q403 | B-4 | |
| IC007 | B-3 | | Q404 | C-4 | |
| IC010 | E-10 | | Q405 | C-5 | |
| IC011 | D-8 | | Q406 | C-7 | |
| IC012 | I-6 | | Q407 | C-3 | |
| | | | Q408 | A-3 | |
| LV201 | I-12 | | Q409 | D-8 | |
| | | | Q410 | C-9 | |
| Q002 | I-7 | | Q413 | B-4 | |
| Q004 | G-6 | | Q420 | A-2 | |
| Q006 | I-6 | | Q421 | A-2 | |
| Q009 | H-7 | | Q423 | A-4 | |
| Q010 | I-4 | | | | |
| Q011 | D-4 | | RV001 | D-9 | |
| Q013 | B-5 | | RV002 | C-9 | |
| Q014 | B-5 | | RV005 | G-7 | |
| Q015 | I-6 | | RV006 | G-6 | |
| Q018 | I-5 | | RV007 | F-4 | |
| Q019 | I-5 | | RV008 | F-5 | |
| Q020 | H-5 | | RV009 | E-3 | |
| Q023 | G-5 | | RV010 | E-3 | |
| Q024 | F-5 | | RV011 | I-10 | |
| Q025 | E-6 | | RV012 | H-8 | |
| Q026 | E-4 | | RV013 | E-11 | |
| Q027 | E-4 | | RV014 | D-11 | |
| Q100 | H-2 | | | | |

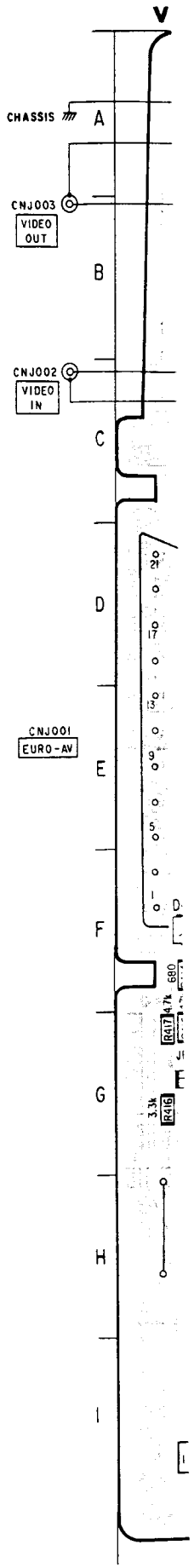


X : NO MOUNT

| REF | WG MODEL | AEP MODEL | REF | WG MODEL | AEP MODEL | REF | WG MODEL | AEP MODEL |
|---|---|---|---|---|---|---|---|---|
| R408 | 75Ω | 39Ω | C414 | 10/50 | X | CN012 | 4P | X |
| R434 | 22kΩ | X | C418 | 22/25 | X | CN013 | 4P | X |
| R435 | 22kΩ | X | C419 | 5mm 1W | 4.7/50V | L411 | 22μH | X |
| R436 | 1kΩ | X | D403 | DTA144EK | X | JW1 | JUMPER | X |
| R444 | 910Ω | 820Ω | D407 | 2SC1623 | X | JW132 | X | JUMPER |
| R458 | 100Ω | X | D100 | X | 1SS187 | JW140 | X | JUMPER |
| R480 | X | 0Ω | D402 | 1SS196 | X | | | |
| R481 | X | 0Ω | IC007 | CX-20061 | X | | | |
| R482 | 0Ω | 39Ω | CN011 | 2P | X | | | |

## VI-20 BOARD

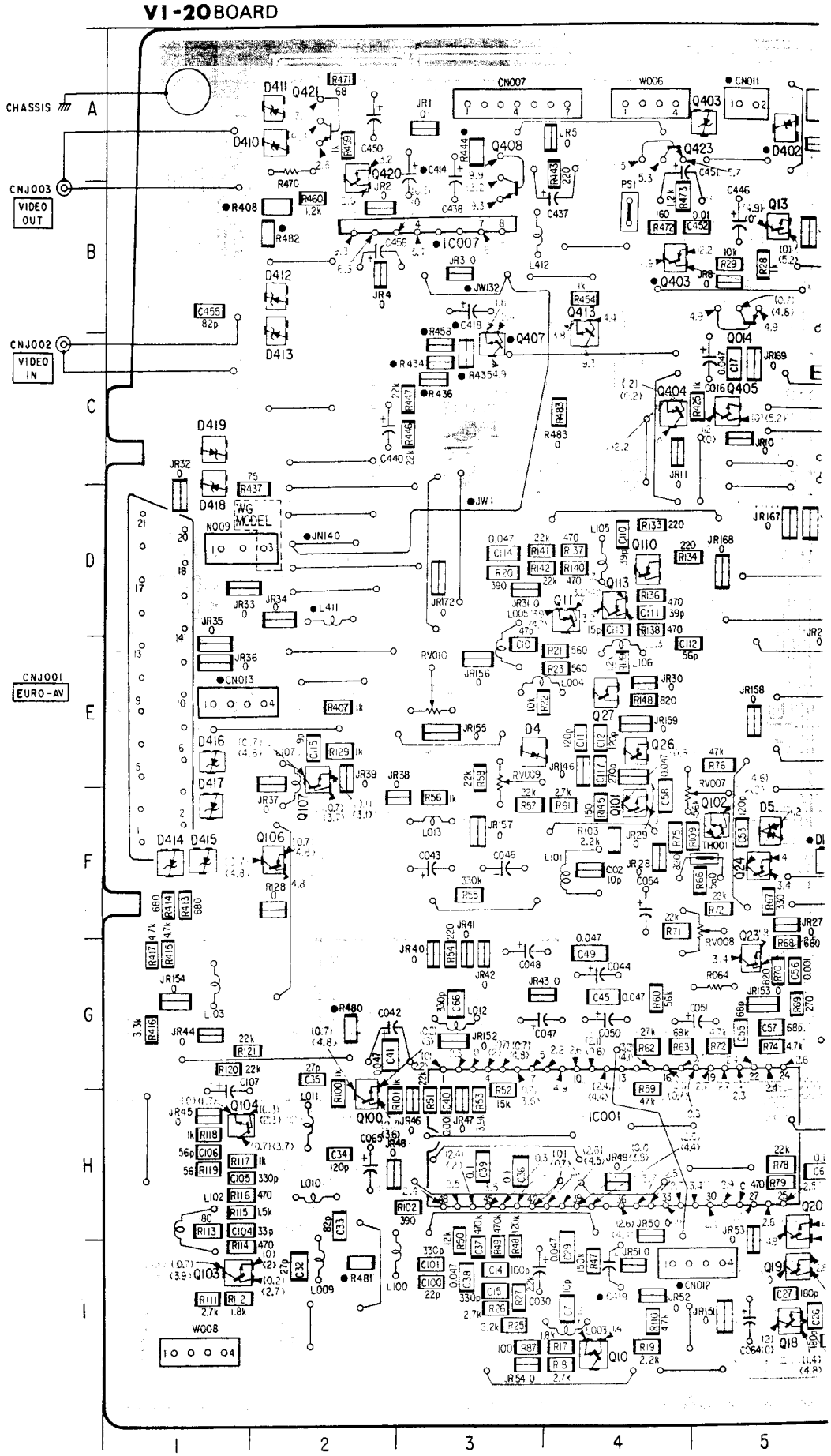


| | | | |
|---|---|---|---|
| D004 | E-3 | Q101 | F-4 |
| D005 | F-5 | Q102 | F-5 |
| D100 | F-5 | Q103 | I-1 |
| D202 | G-8 | Q104 | H-1 |
| D204 | F-13 | Q106 | F-2 |
| D205 | G-13 | Q107 | E-2 |
| D206 | H-13 | Q110 | D-4 |
| D301 | F-12 | Q113 | D-4 |
| D302 | E-13 | Q201 | E-6 |
| D303 | D-13 | Q202 | H-11 |
| D304 | C-12 | Q203 | G-9 |
| D305 | B-7 | Q204 | G-9 |
| D402 | A-5 | Q205 | F-8 |
| D403 | A-5 | Q206 | G-8 |
| D410 | A-2 | Q207 | F-11 |
| D411 | A-2 | Q208 | F-12 |
| D412 | B-2 | Q209 | F-10 |
| D413 | C-1 | Q211 | G-9 |
| D414 | F-1 | Q215 | G-11 |
| D415 | F-1 | Q216 | G-10 |
| D416 | E-1 | Q217 | F-13 |
| D417 | F-1 | Q218 | G-13 |
| D418 | D-1 | Q219 | F-13 |
| D419 | C-1 | Q220 | G-13 |
| | | Q221 | H-13 |
| IC001 | H-4 | Q222 | H-13 |
| IC002 | H-10 | Q301 | E-9 |
| IC003 | B-12 | Q302 | E-8 |
| IC004 | B-8 | Q304 | D-11 |
| IC005 | D-12 | Q403 | B-4 |
| IC007 | B-3 | Q404 | C-4 |
| IC010 | E-10 | Q405 | C-5 |
| IC011 | D-8 | Q406 | C-7 |
| IC012 | I-6 | Q407 | C-3 |
| | | Q408 | A-3 |
| LV201 | I-12 | Q409 | D-8 |
| | | Q410 | C-9 |
| Q002 | I-7 | Q413 | B-4 |
| Q004 | G-6 | Q420 | A-2 |
| Q006 | I-6 | Q421 | A-2 |
| Q009 | H-7 | Q423 | A-4 |
| Q010 | I-4 | | |
| Q011 | D-4 | RV001 | D-9 |
| Q013 | B-5 | RV002 | C-9 |
| Q014 | B-5 | RV005 | G-7 |
| Q015 | I-6 | RV006 | G-6 |
| Q018 | I-5 | RV007 | F-4 |
| Q019 | I-5 | RV008 | F-5 |
| Q020 | H-5 | RV009 | E-3 |
| Q023 | G-5 | RV010 | E-3 |
| Q024 | F-5 | RV011 | I-10 |
| Q025 | E-6 | RV012 | H-8 |
| Q026 | E-4 | RV013 | E-11 |
| Q027 | E-4 | RV014 | D-11 |
| Q100 | H-2 | | |

x : NO MOUNT

| WG MODEL | AEP MODEL | REF | WG MODEL | AEP MODEL | REF | WG MODEL | AEP MODEL |
|---|---|---|---|---|---|---|---|
| 75Ω | 39Ω | C414 | 0/50 | x | CN012 | 4P | x |
| 22kΩ | x | C418 | 22/25 | x | CN013 | 4P | x |
| 22kΩ | x | C419 | 5mm ,W | 47/50V | L411 | 22μH | x |
| 1kΩ | x | D403 | DTA144EK | x | JW1 | JUMPER | x |
| 910Ω | 820Ω | D407 | 2SC1623 | x | JW132 | x | JUMPER |
| 100Ω | x | D100 | x | SS187 | JW140 | x | JUMPER |
| x | 0Ω | D402 | SS196 | x | | | |
| x | 0Ω | IC007 | CX-2006 | x | | | |
| 0Ω | 39Ω | CN011 | 2P | x | | | |

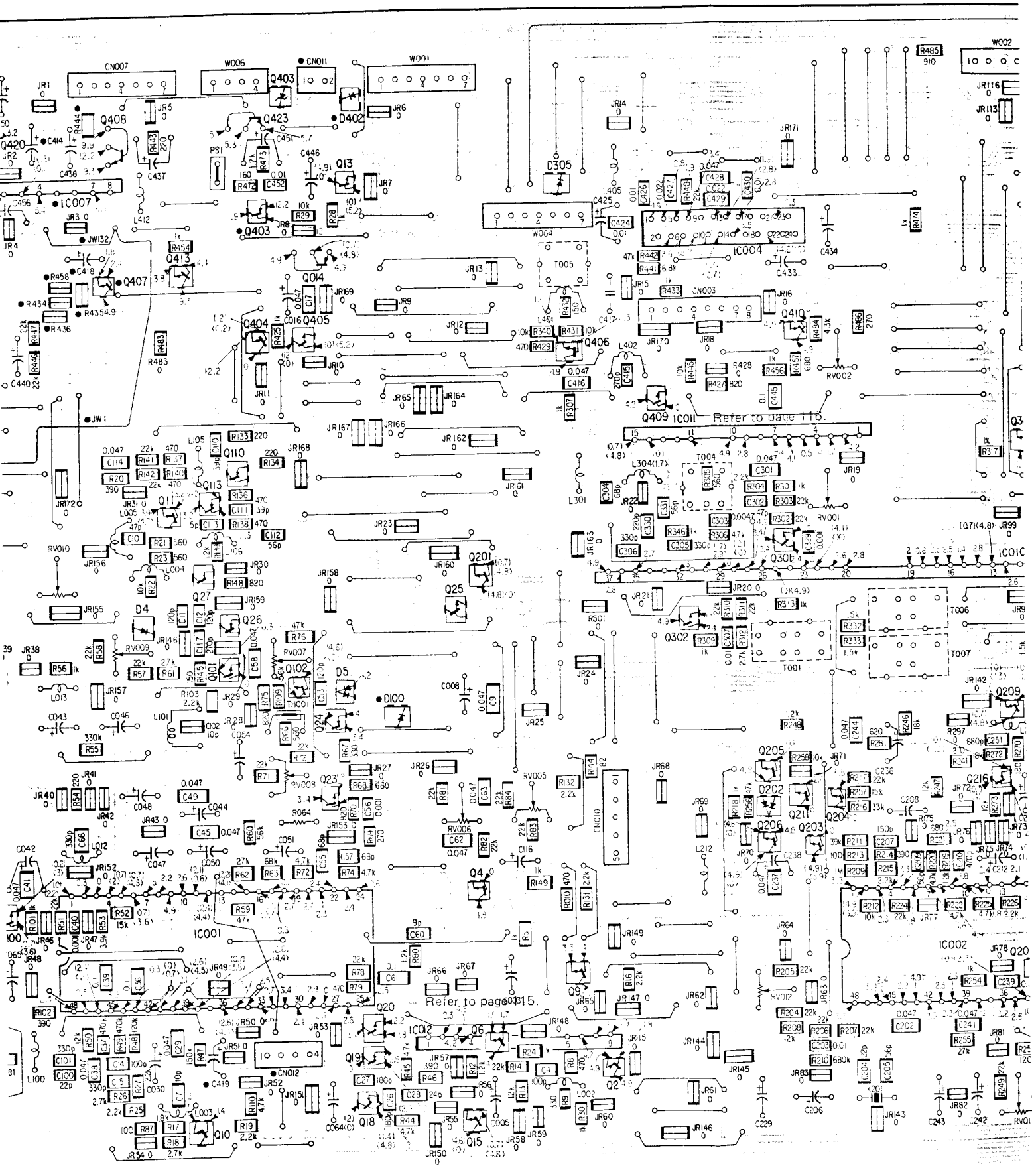
Refer to page 116.
Refer to page 115.
3
4
5
6
7
8
9
10

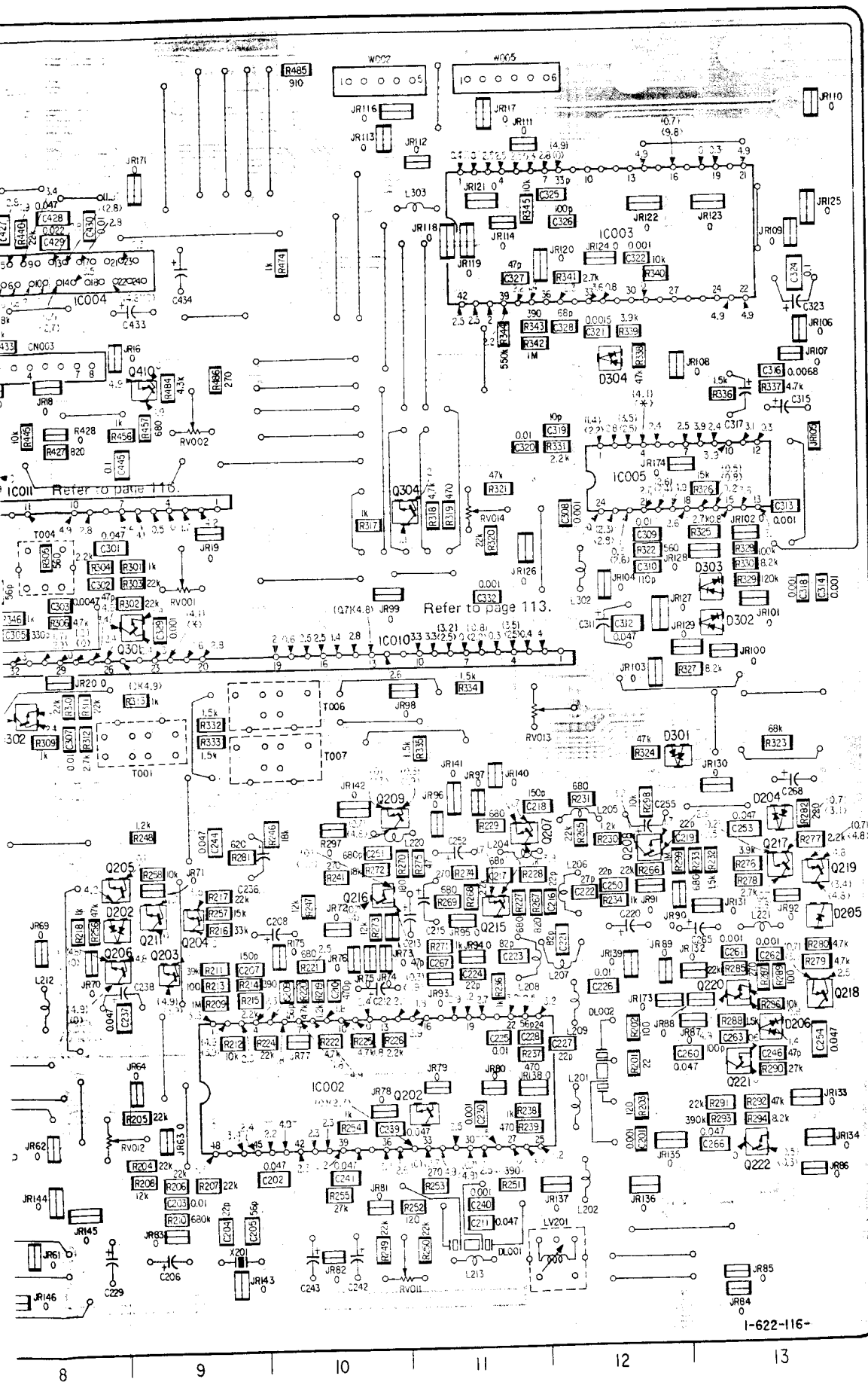


no mark : LP REC/PB mode
( ) : LP REC mode
( ) : LP PB mode
Marked ✱ is not be able to measure the voltage of its position.



2) **VIDEO(2)**

## VI-20(VIDEO) SCHEMATIC DIAGRAM

—Ref. No. VI-20 BOARD : 2,000 series—

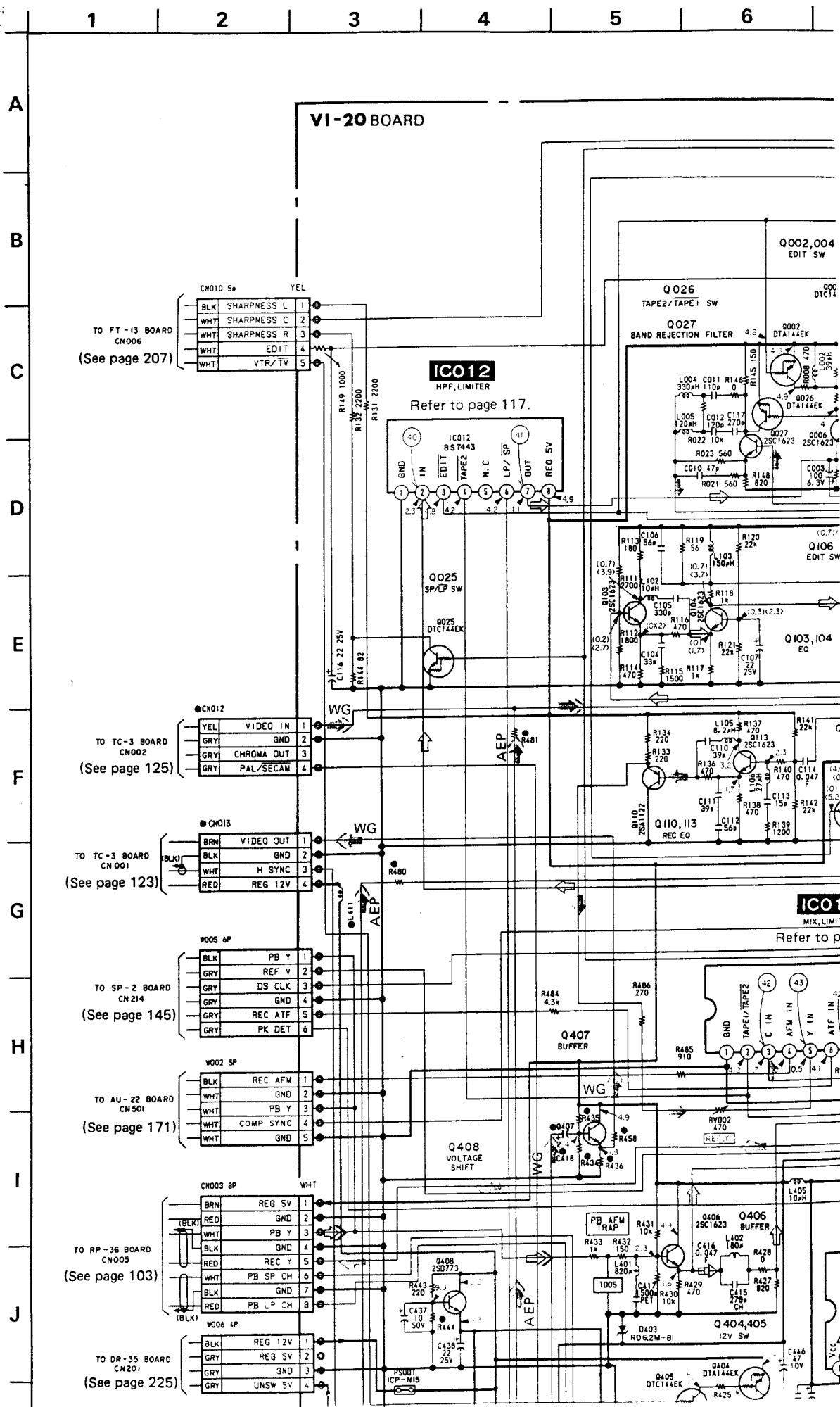

SCHEMATIC DIAGRAM

BOARD : 2,000 series—

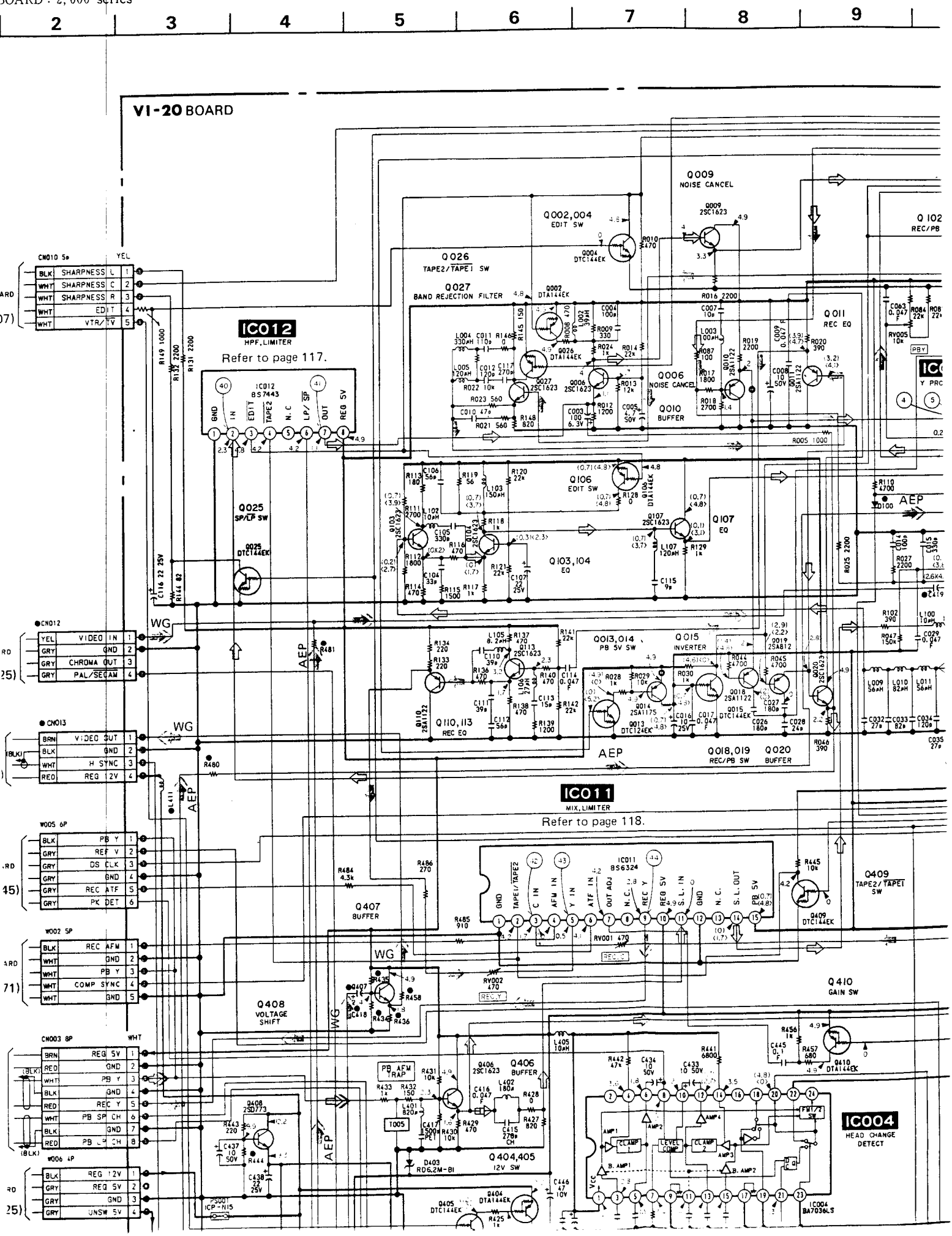

6 | 7 | 8 | 9 | 10 | 11 | 12 | 13 | 14

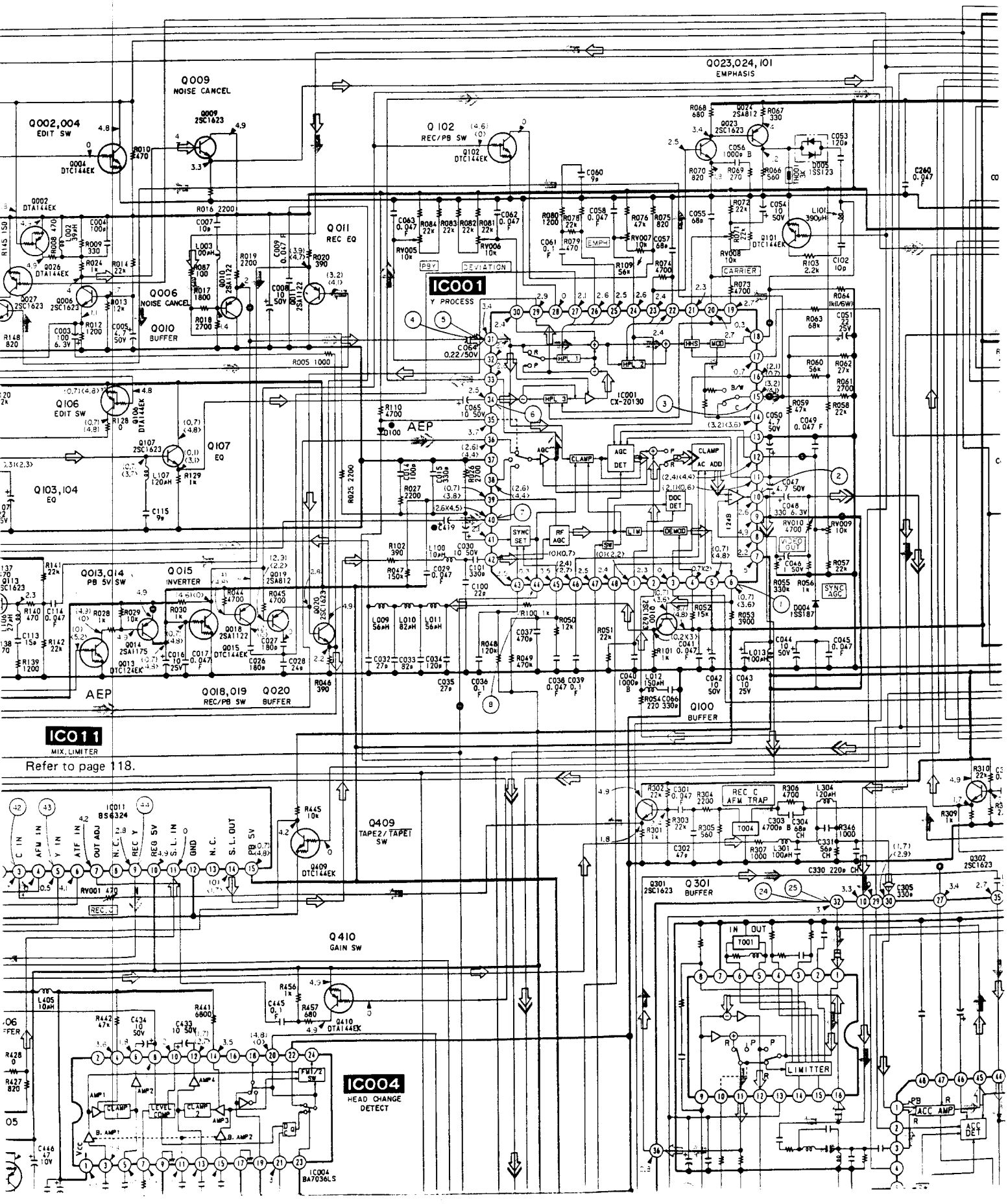

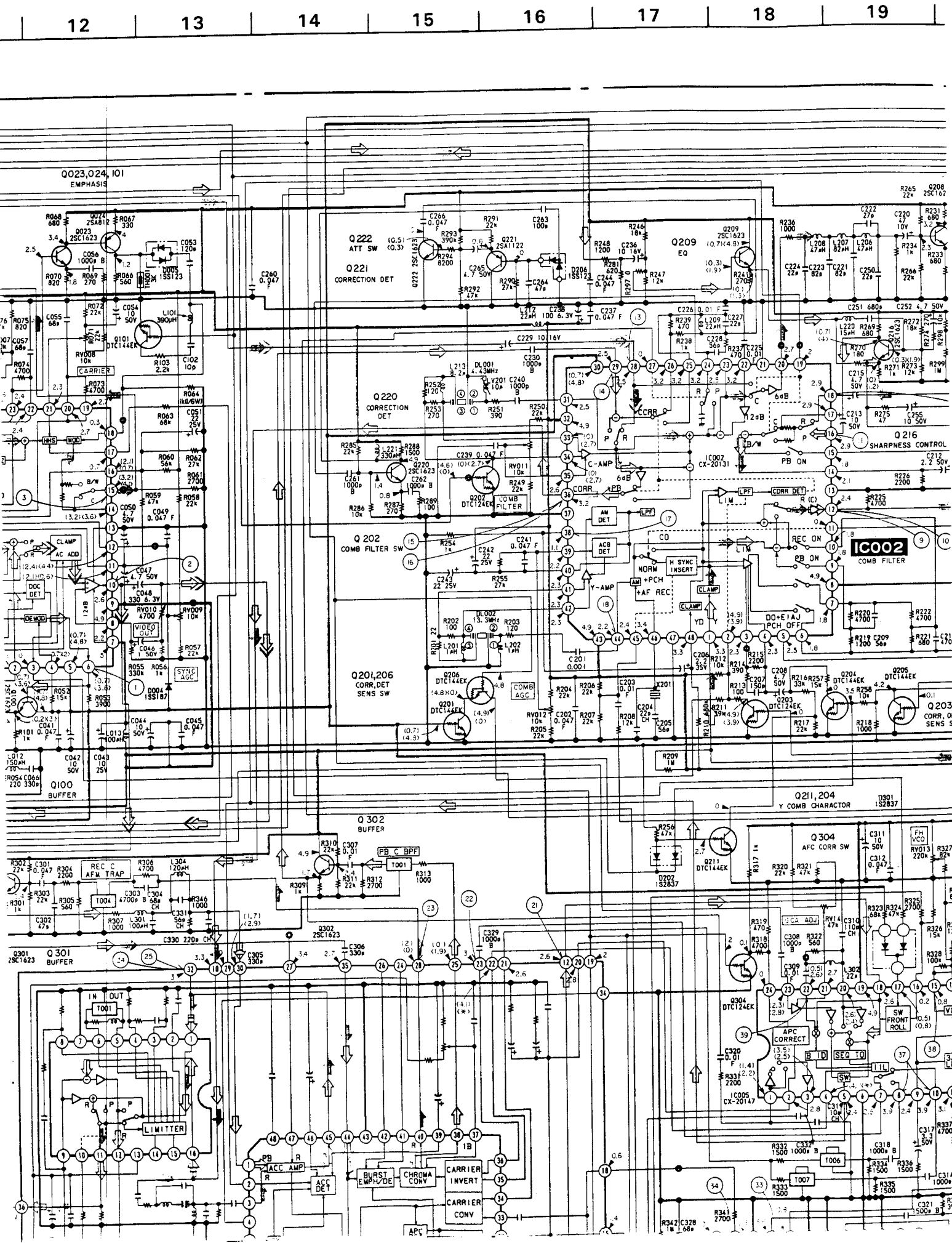
12
13
14
15
16
17
18
19
Q023,024,101
EMPHASIS
Q222
ATT SW
Q221
CORRECTION DET
Q209
EQ
Q220
CORRECTION DET
Q202
COMB FILTER SW
Q201,206
CORR,DET SENS SW
Q100
BUFFER
Q302
BUFFER
Q301
BUFFER
Q211,204
Y COMB CHARACTOR
Q304
AFC CORR SW
Q216
SHARPNESS CONTROL
IC002
COMB FILTER
Q203
CORR, DE SENS S
CARRIER
CLAMP
AC ADD
DOC DET
DEMOD
VIDEO OUT
SYNC AGC
REC C AFM TRAP
PB C BPF
LIMITTER
ACC AMP
ACC DET
BURST EMPH/DE
CHROMA CONV
CARRIER INVERT
CARRIER CONV
APC
COMB FILTER
AM DET
ACB DET
NORM
H SYNC INSERT
+PCH
+AF REC
Y-AMP
C-AMP
CORR
PB ON
REC ON
DO+EIAJ PCH OFF
APC CORRECT
SW FRONT ROLL
SEQ TG
IN
OUT

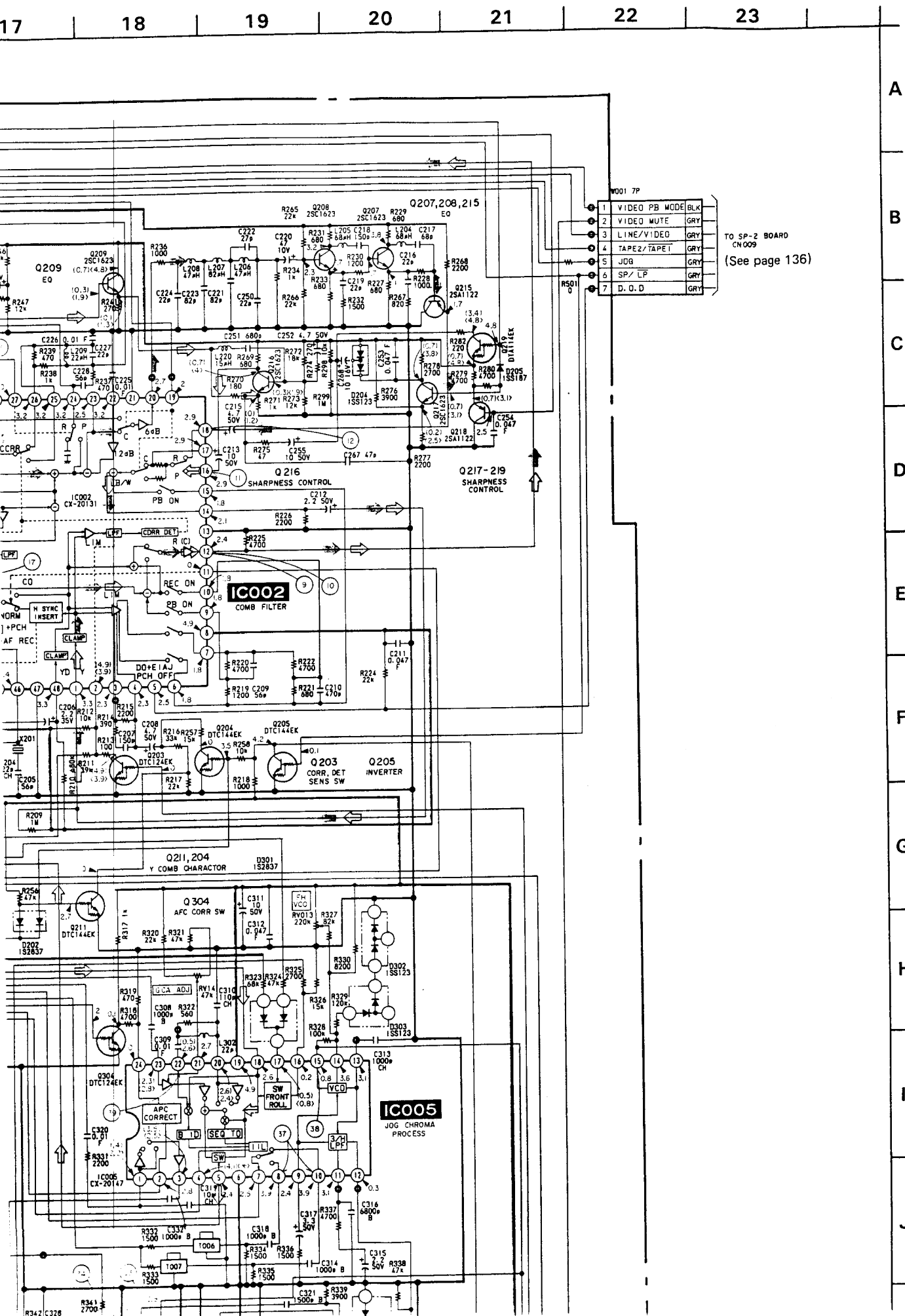
17
18
19
20
21
22
23
A
B
C
D
E
F
G
H
I
J
Q207,208,215
EQ
Q209
EQ
W001 7P
1 VIDEO PB MODE BLK
2 VIDEO MUTE GRY
3 LINE/VIDEO GRY
4 TAPE2/TAPE1 GRY
5 JOG GRY
6 SP/LP GRY
7 D.O.D GRY
TO SP-2 BOARD CN009
(See page 136)
Q216
SHARPNESS CONTROL
Q217-219
SHARPNESS CONTROL
IC002
COMB FILTER
IC002 CX-20131
Q203
CORR. DET SENS SW
Q205
INVERTER
Q211, 204
Y COMB CHARACTOR
Q304
AFC CORR SW
IC005
JOG CHROMA PROCESS
IC005 CX-20147
PB ON
REC ON
H SYNC INSERT
CLAMP
APC CORRECT
SEQ TO
SW FRONT ROLL
VCO
Note:
Caution v
New parts
Be carefu
because it
All resist
kΩ: 100C
All capac
50V or h
tantalums
All variat
unless oth
: no
: fus
: par
Marked
the AEP n
: adj
: B -
Voltages
Readings
Readings
Voltage
tolerances
Note: Th
par
When indic
ence num
the board n
Signal pat
: P
: P
: R
: P
: F
: P
VI-20 BOARD

| | |
|---|---|
| EO PB MODE | BLK |
| EO MUTE | GRY |
| E/VIDEO | GRY |
| E2/TAPE1 | GRY |
| LP | GRY |
| D | GRY |

TO SP-2 BOARD CN009

(See page 136)

**Note:**

- Caution when replacing chip parts.
  New parts must be attached after removal of chip.
  Be careful not to heat the minus side of tantalum capacitor, because it is damaged by the heat.
- All resistors are in ohms, 1/10W unless otherwise noted.
  kΩ: 1000Ω, MΩ: 1000kΩ.
- All capacitors are in μF unless otherwise noted. pF : μμF.
  50V or less are not indicated except for electrolytics. and tantalums.
- All variable and adjustable resistors have characteristic curve B, unless otherwise noted.
- : nonflammable resistor.
- : fusible resistor.
- : panel designation.
- Marked ● parts have the difference between the WG model and the AEP model.
- : adjustment for repair.
- : B + bus.
- Voltages are dc with respect to ground unless otherwise noted.
- Readings are taken with a colour-bar signal input.
- Readings are taken with a digital multimeter (DC10MΩ).
- Voltage variations may be noted due to normal production tolerances.

**Note: The components identified by shading and mark ⚠ are critical for safety. Replace only with part number specified.**

When indicating parts by reference number, please include the board name.

- **Signal path**
  - : REC Y Signal
  - : PB Y Signal
  - : REC CHROMA Signal
  - : PB CHROMA Signal
  - : REC Y/CHROMA Signal
  - : PB Y/CHROMA Signal

**VI-20 BOARD**

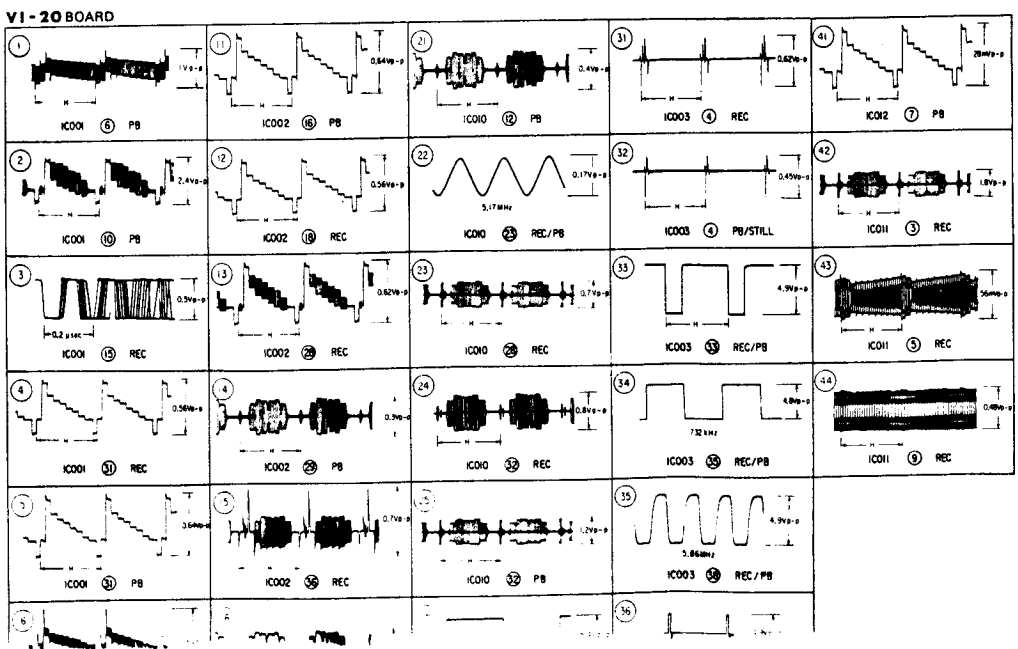

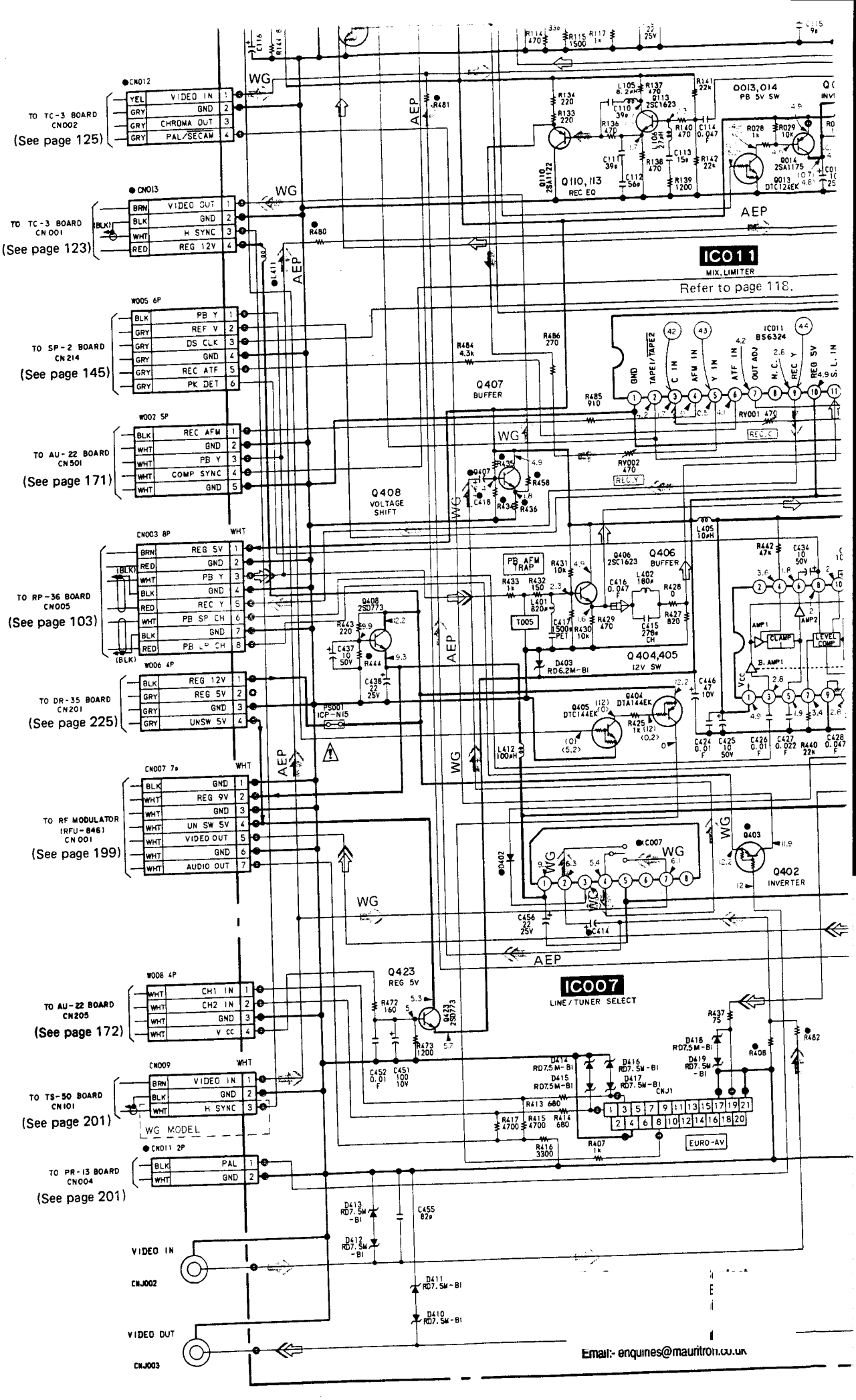


Email:- enquiries@mauritron.co.uk

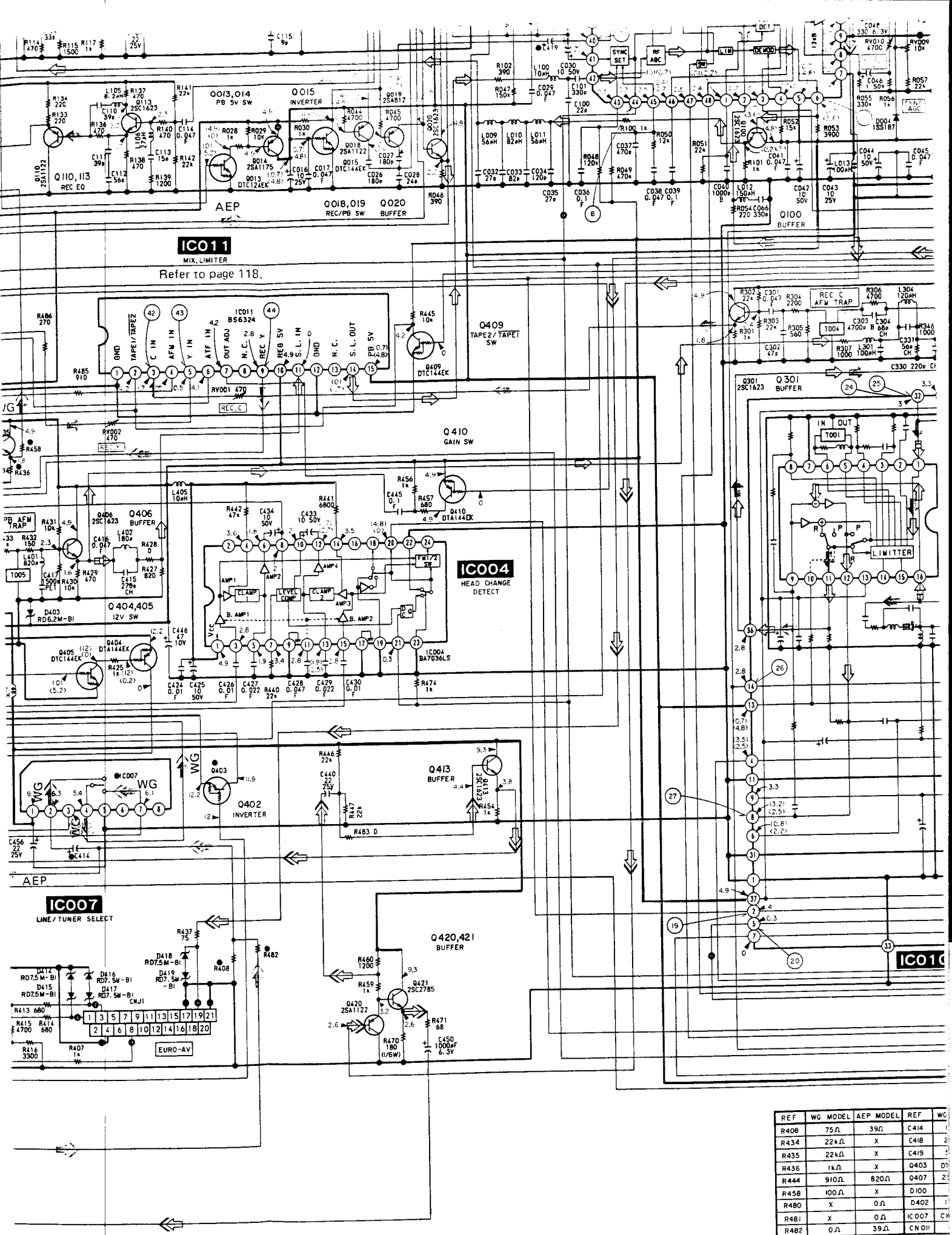


| REF | WG MODEL | AEP MODEL | REF | WG |
|---|---|---|---|---|
| R408 | 75Ω | 39Ω | C414 | |
| R434 | 22kΩ | X | C418 | |
| R435 | 22kΩ | X | C419 | |
| R436 | 1kΩ | X | Q403 | |
| R444 | 910Ω | 820Ω | Q407 | |
| R458 | 100Ω | X | D100 | |
| R480 | X | 0Ω | D402 | |
| R481 | X | 0Ω | IC007 | |
| R482 | 0Ω | 39Ω | CN011 | |

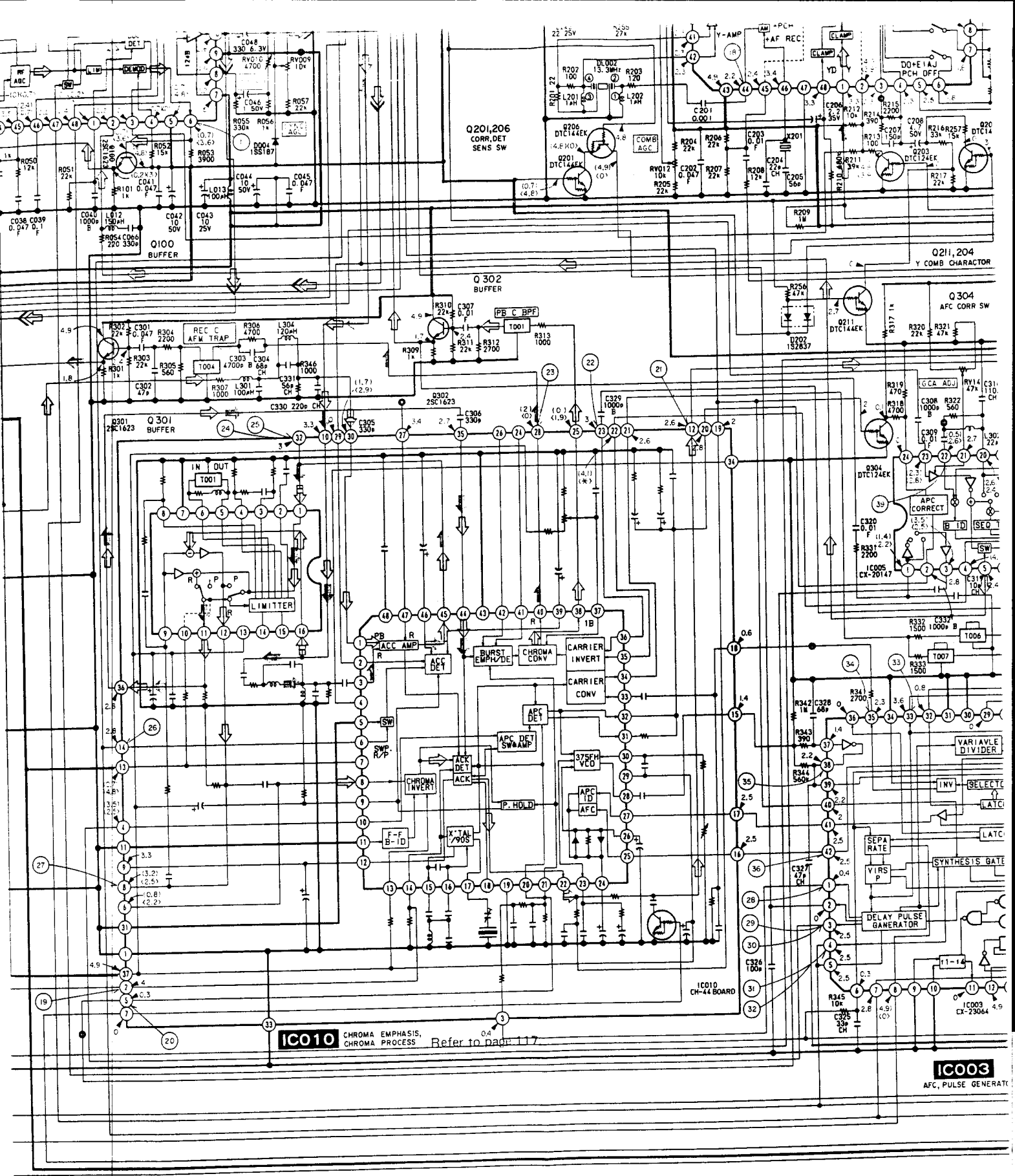


Refer to page 117

X : NO MOUNT

| REF | WG MODEL | AEP MODEL | REF | WG MODEL | AEP MODEL | REF | WG MODEL | AEP MODEL |
|---|---|---|---|---|---|---|---|---|
| R408 | 75Ω | 39Ω | C414 | 10/50 | X | CN012 | 4P | X |
| R434 | 22kΩ | X | C418 | 22/25 | X | CN013 | 4P | X |
| R435 | 22kΩ | X | C419 | 5mm JW | 4.7/50V | L411 | 22μH | X |
| R436 | 1kΩ | X | Q403 | DTA144EK | X | | | |
| R444 | 910Ω | 820Ω | Q407 | 2SC1623 | X | | | |
| R458 | 100Ω | X | D100 | X | 1SS187 | | | |
| R480 | X | 0Ω | D402 | 1SS196 | X | | | |
| R481 | X | 0Ω | IC007 | CX-20061 | X | | | |
| R482 | 0Ω | 39Ω | CN011 | 2P | X | | | |

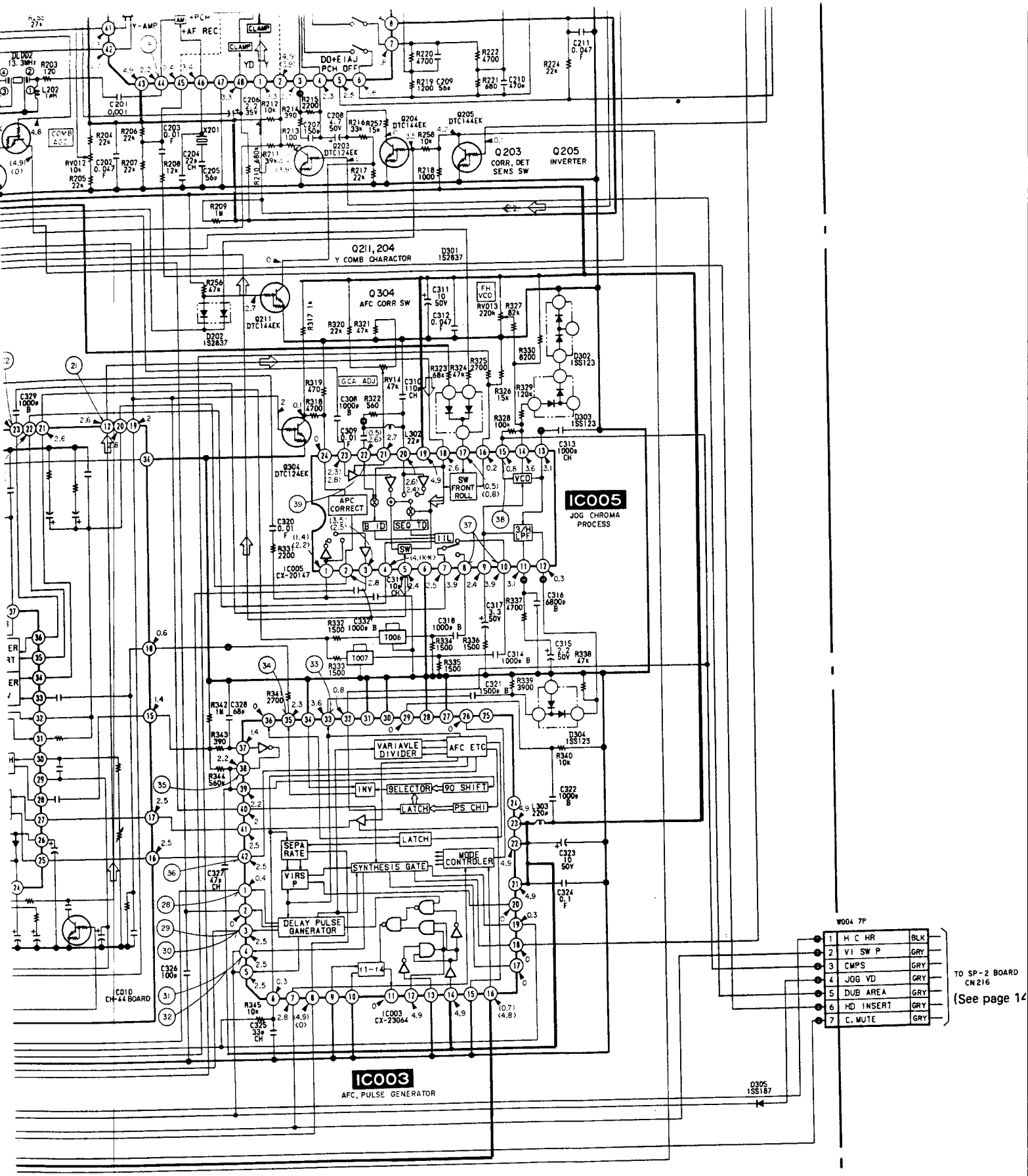


no mark : LP REC/PB mode
( ) : LP REC mode
< > : LP PB mode
Marked * is not be able to measure the voltage of its position

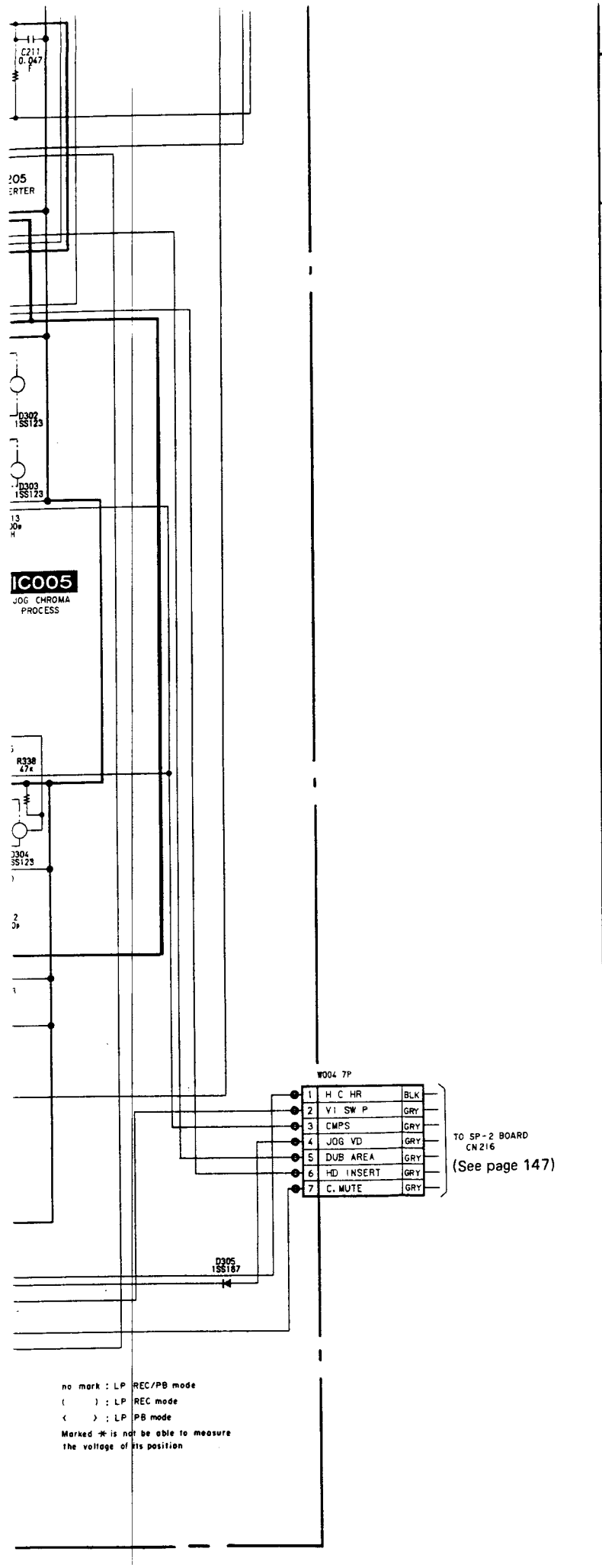


ence number, please include the board name.

- **Signal path**
  - : REC Y Signal
  - : PB Y Signal
  - : REC CHROMA Signal
  - : PB CHROMA Signal
  - : REC Y/CHROMA Signal
  - : PB Y/CHROMA Signal

**VI-20** BOARD

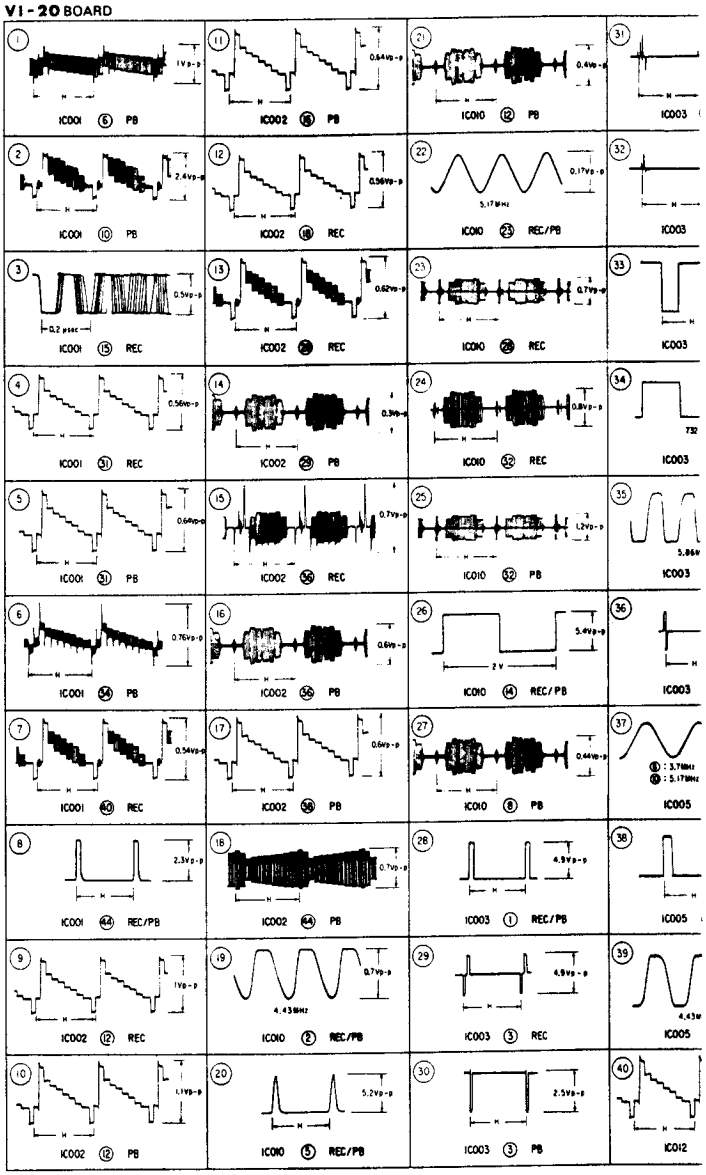

ence number, please include the board name.

- **Signal path**
  - ➡ : REC Y Signal
  - ⇨ : PB Y Signal
  - ➡ : REC CHROMA Signal
  - ⇨ : PB CHROMA Signal
  - ➡⇨ : REC Y/CHROMA Signal
  - ⇨⇨ : PB Y/CHROMA Signal

**VI-20 BOARD**

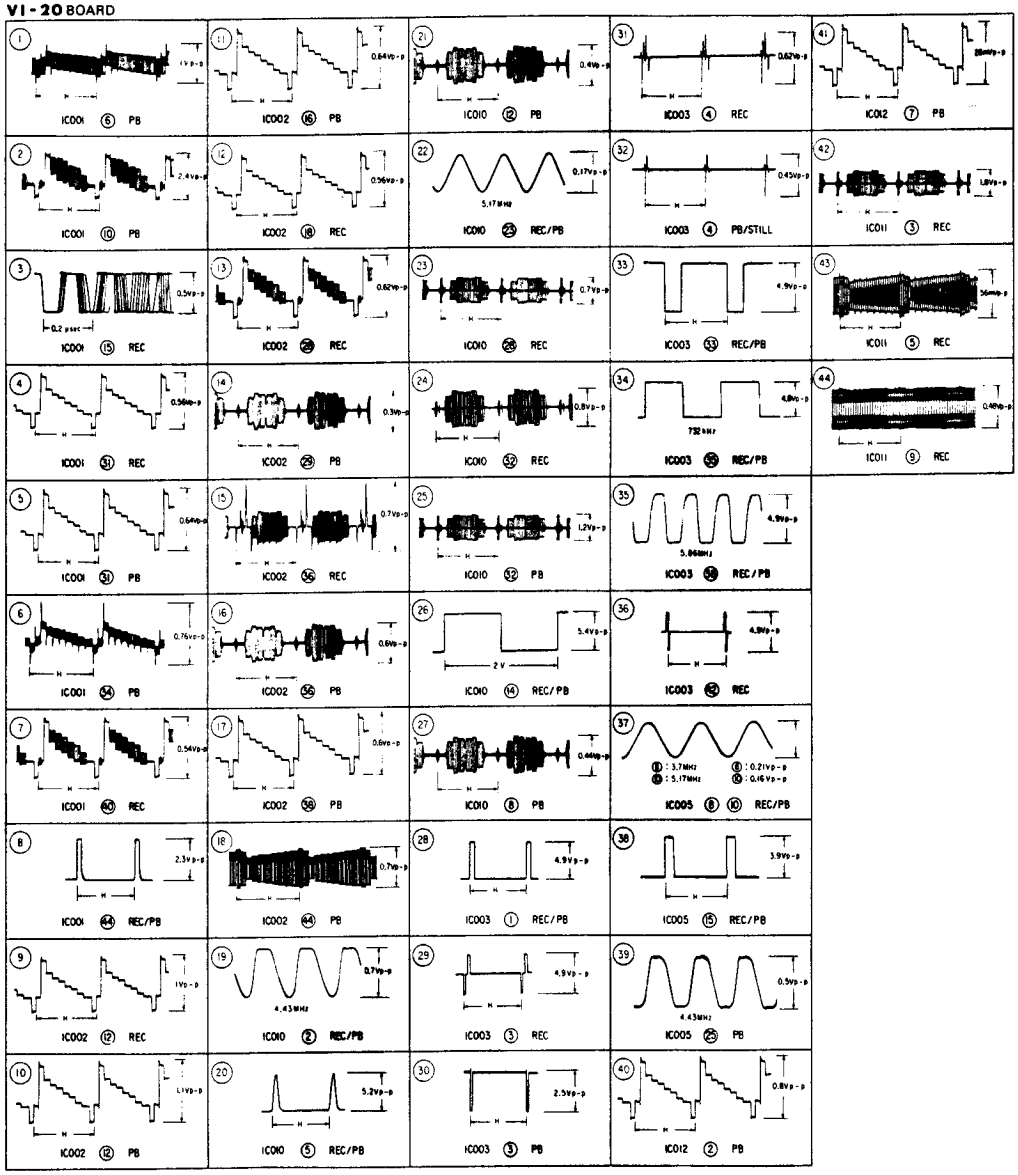


BLK
GRY
GRY
GRY
GRY
GRY
GRY

SP-2 BOARD
CN216
See page 147)

**Note:**

- ○— : indicates a lead wire mounted on the component side.
- ●— : indicates a lead wire mounted on the printed side.
- ⊗ : Through hole.
- : Pattern from the side which enables seeing.
- : Pattern of the rear side.
- : B+ pattern from the side which enables seeing.
- Digital transistor (BS7443:DT001,DT002,DT003,DT004,DT005 DT006, BS6324:DT001) transistor with resistors.
  Refer to the BS7443,BS6324 boards schematic diagram for digital transistor.

When indicating parts by reference number, please include the board name.

**Caution:**

Pattern face side: (Solder Side) Parts on the pattern face side seen from the pattern face are indicated.

Parts face side: (Component Side) Parts on the parts face side seen from the parts face are indicated.

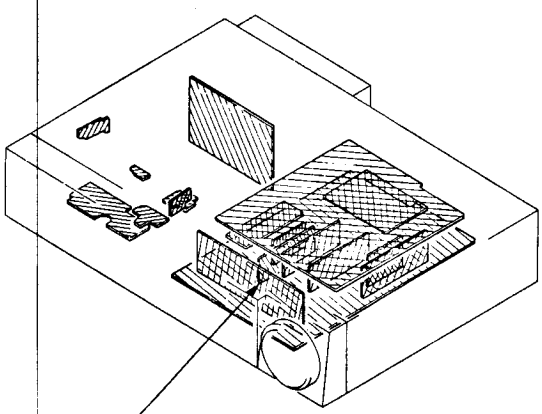

CH-44
(CHROMA PROCESS)

## CH-44(CHROMA PROCESS), BS6324(MIX),

—Ref. No. CH-44 BOARD : 3,000 series, BS6324 BOA

**IC010**

### CH-44 BOARD (COMPONENT SIDE

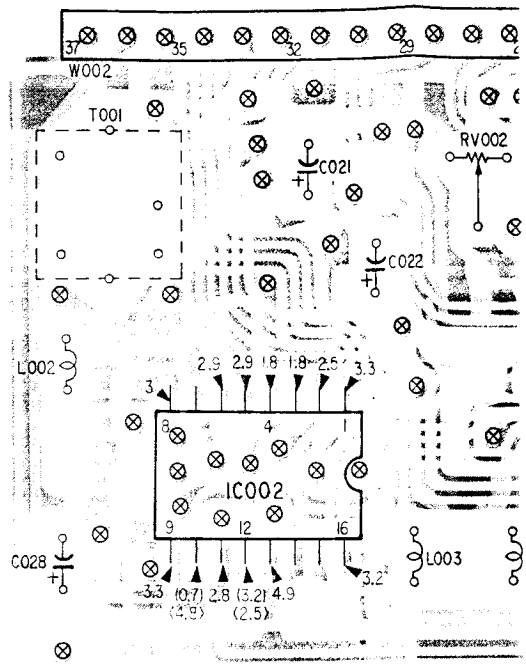


**IC010**

### CH-44 BOARD (SOLDER SIDE)

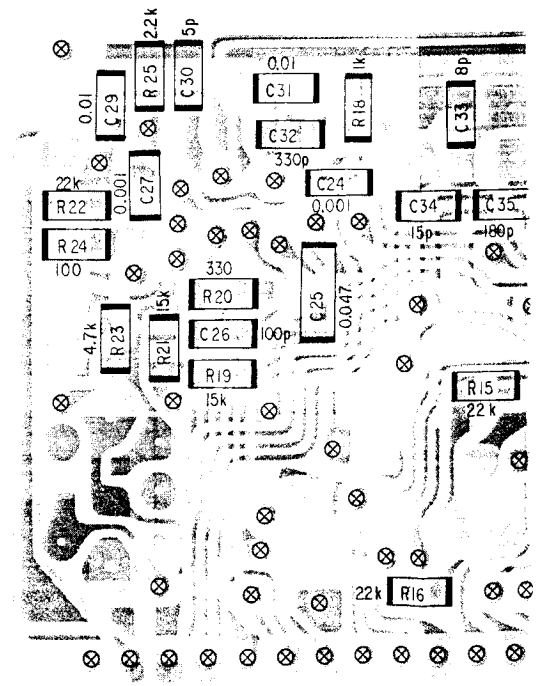

## RD (COMPONENT SIDE)

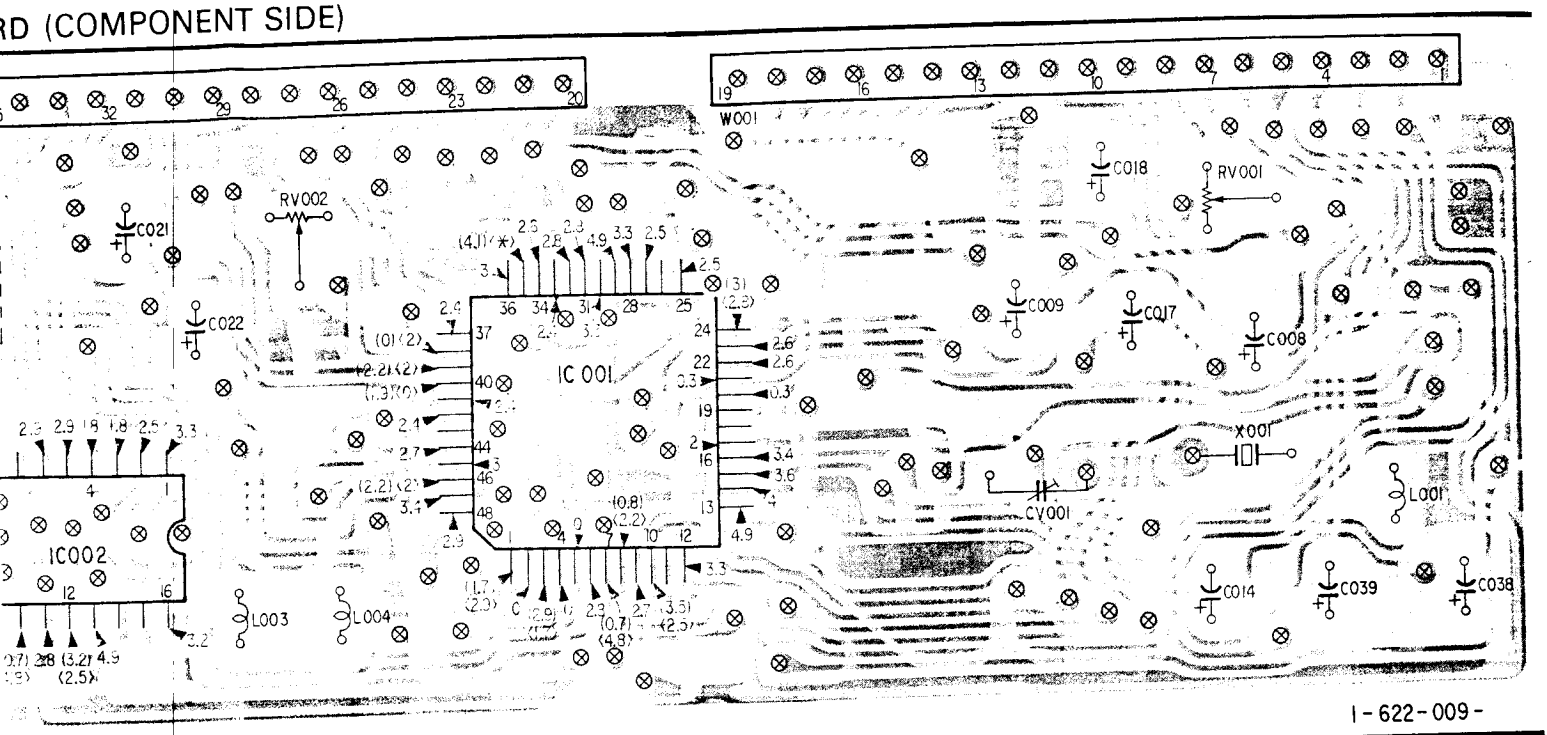


I-622-009-

no mark: LP REC/PB mode
( ) : LP REC mode
〈 〉: LP PB mode
Markd * is not able to m
the voltage of its position

## RD (SOLDER SIDE)

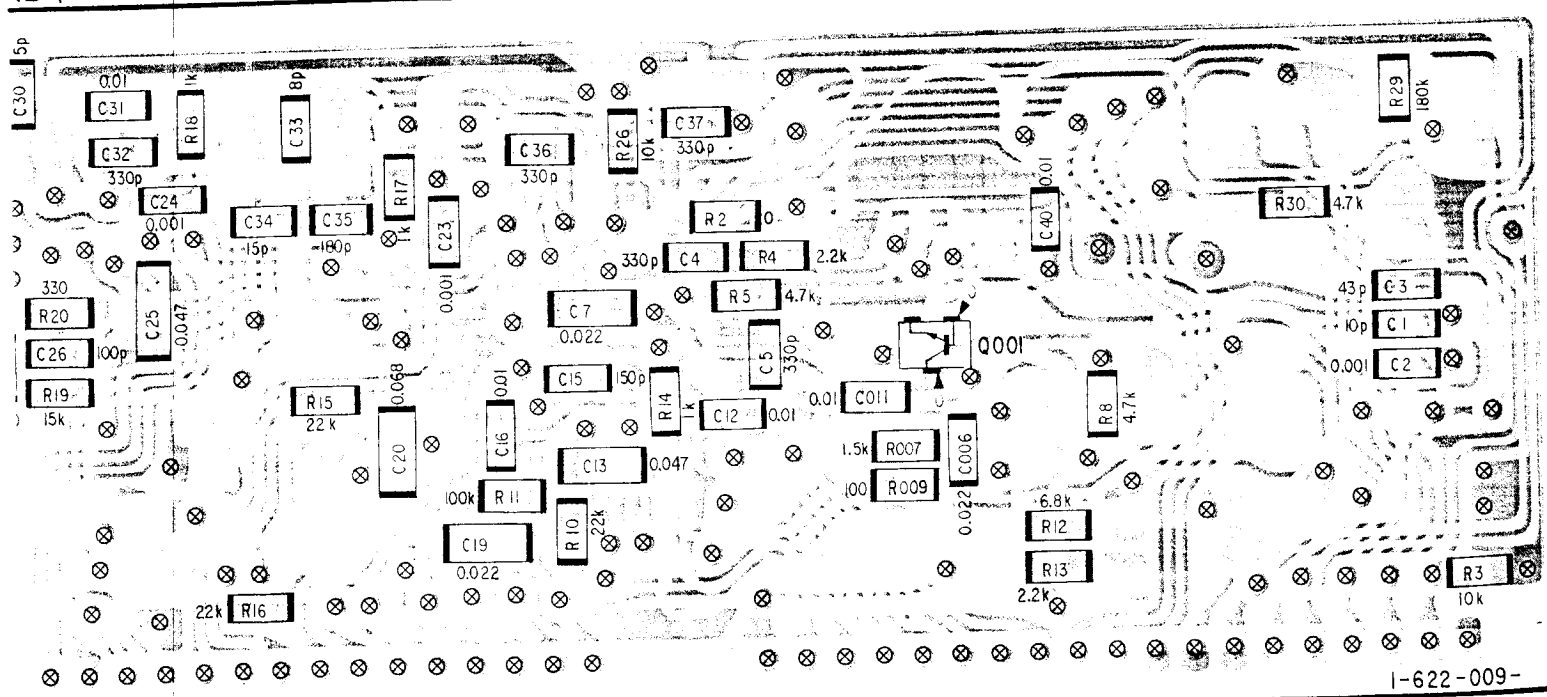


I-622-009-

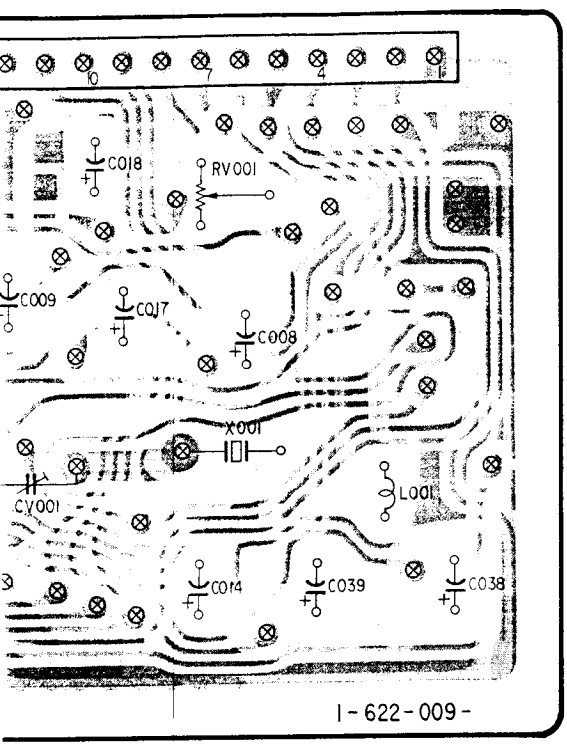


II

no mark: LP REC/PB mode
( ): LP REC mode
< >: LP PB mode
Markd * is not able to measure the voltage of its position

## IC012
**BS7443**(COMPONENT SIDE)

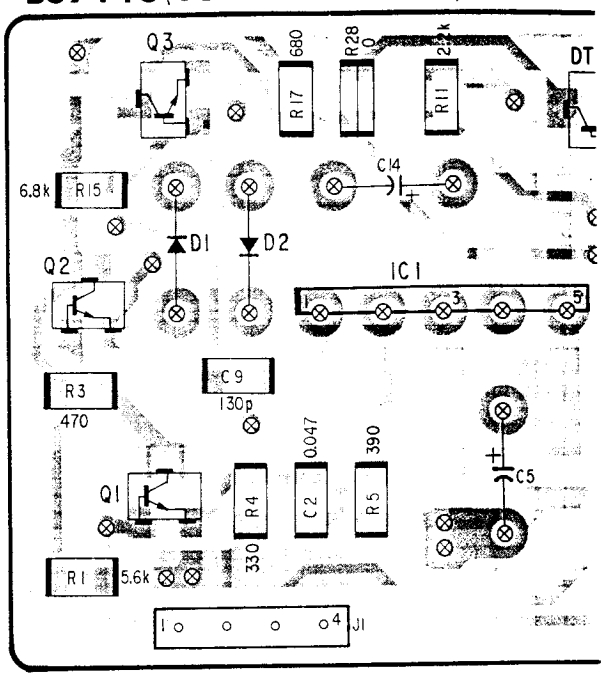


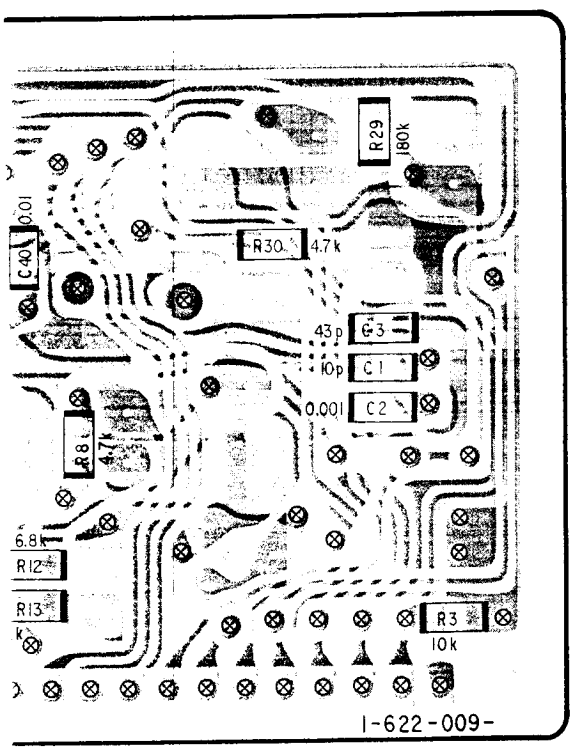


II

## IC012
**BS7443**(SOLDER SIDE)

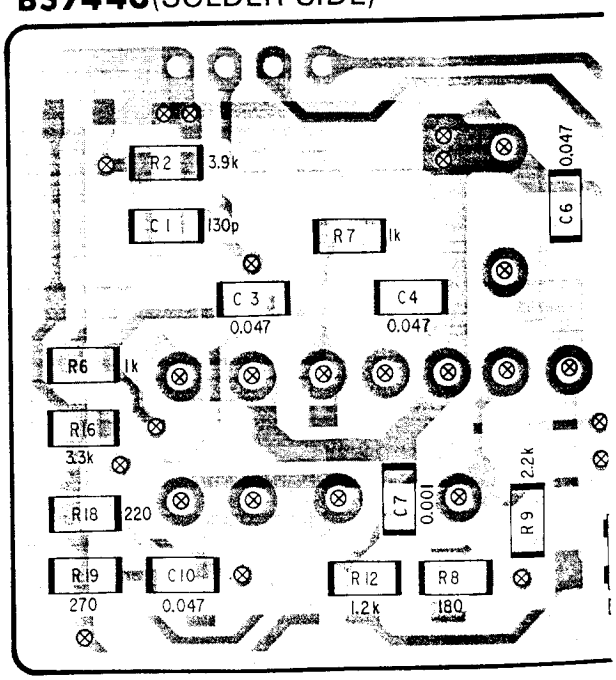

## 012
## 7443 (COMPONENT SIDE)

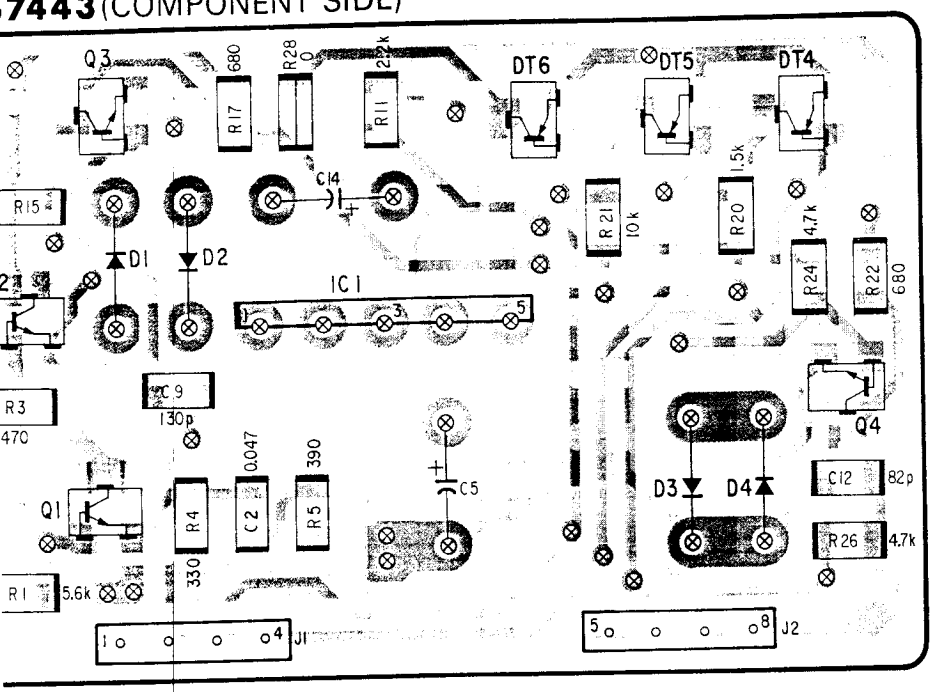


## IC011
## BS6324

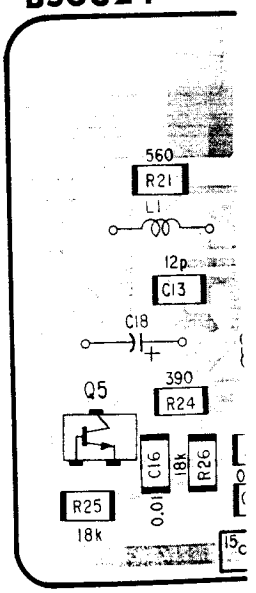


## 012
## 7443 (SOLDER SIDE)

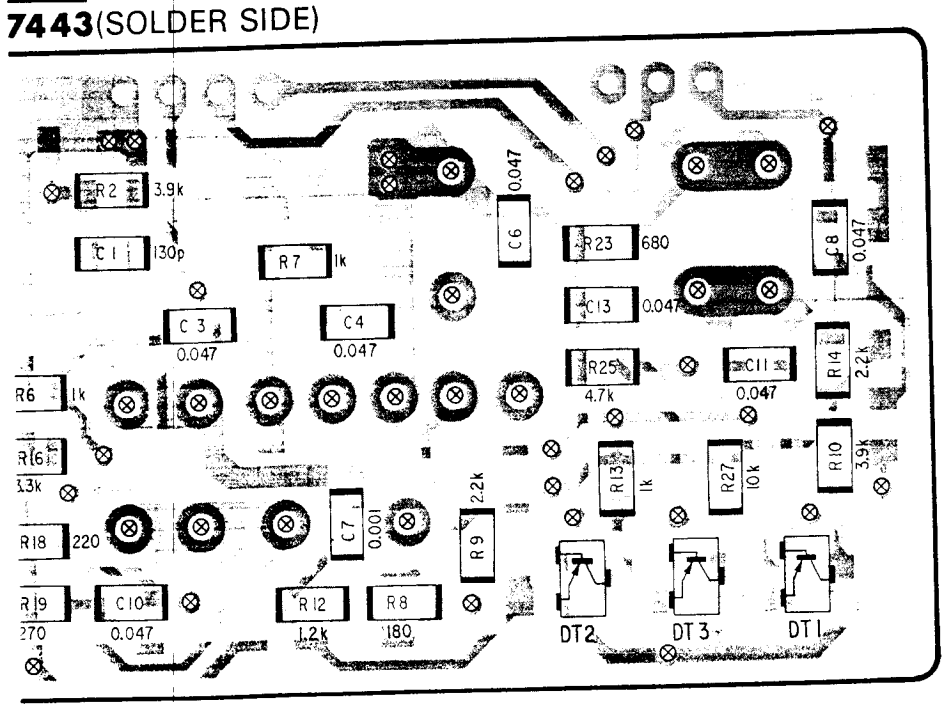

**ICO11**
**BS6324**

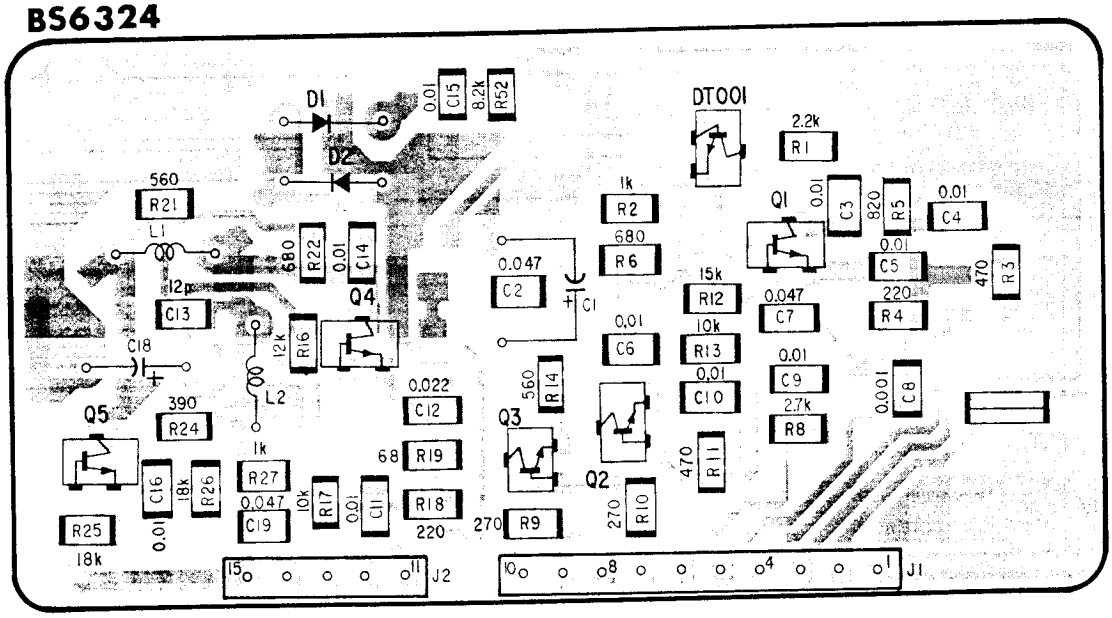

## CH-44(CHROMA PROCESS), BS6324(MIX), BS7443(NOISE CANCEL) SCHEMATIC DIAGRAM

—Ref. No. CH-44 BOARD : 3,000 series, BS6324 BOARD : 3,100 series, BS7443 BOARD : 3,200 series—

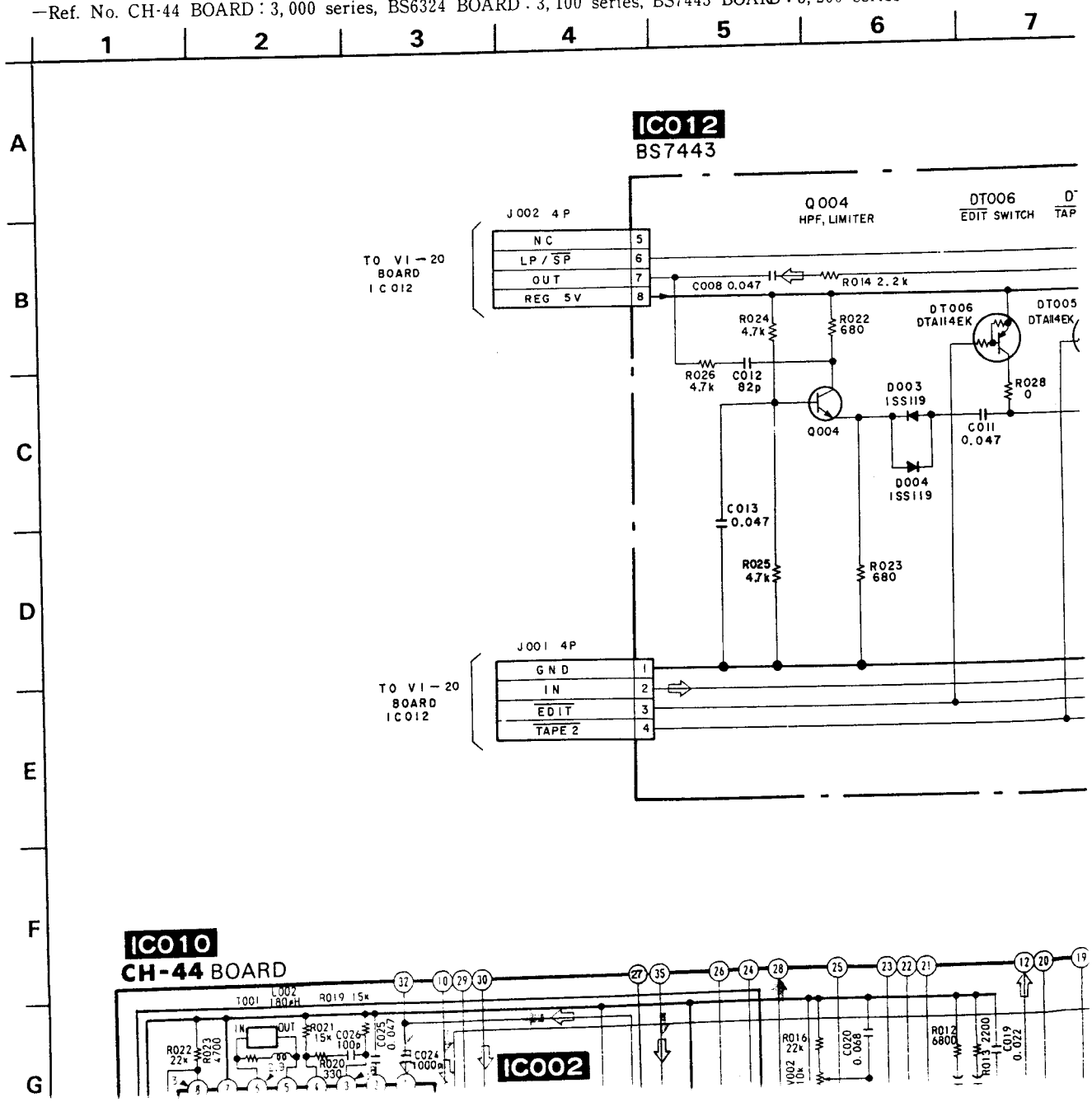

), BS7443(NOISE CANCEL) SCHEMATIC DIAGRAM

ARD : 3, 100 series, BS7443 BOARD : 3, 200 series—

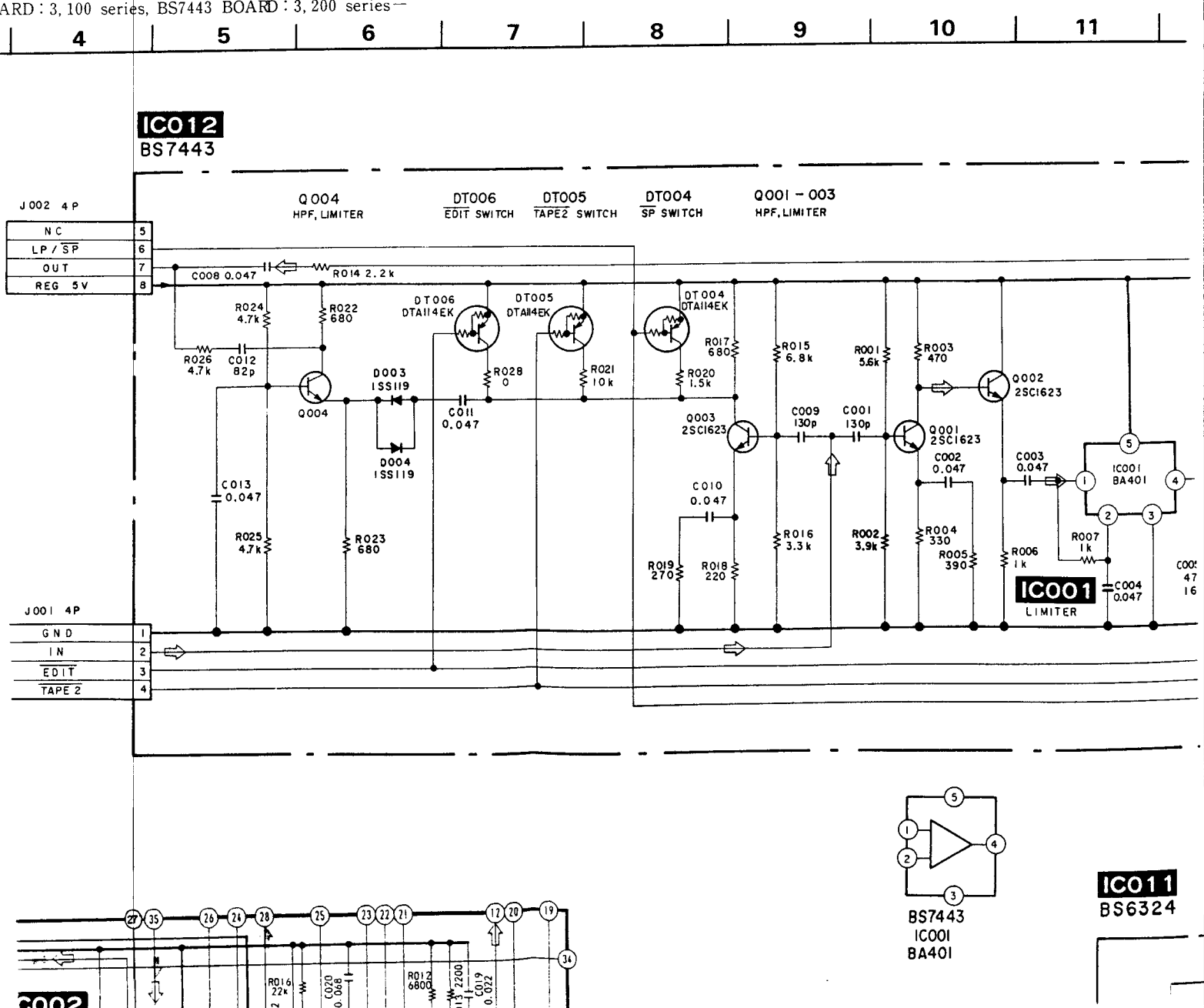

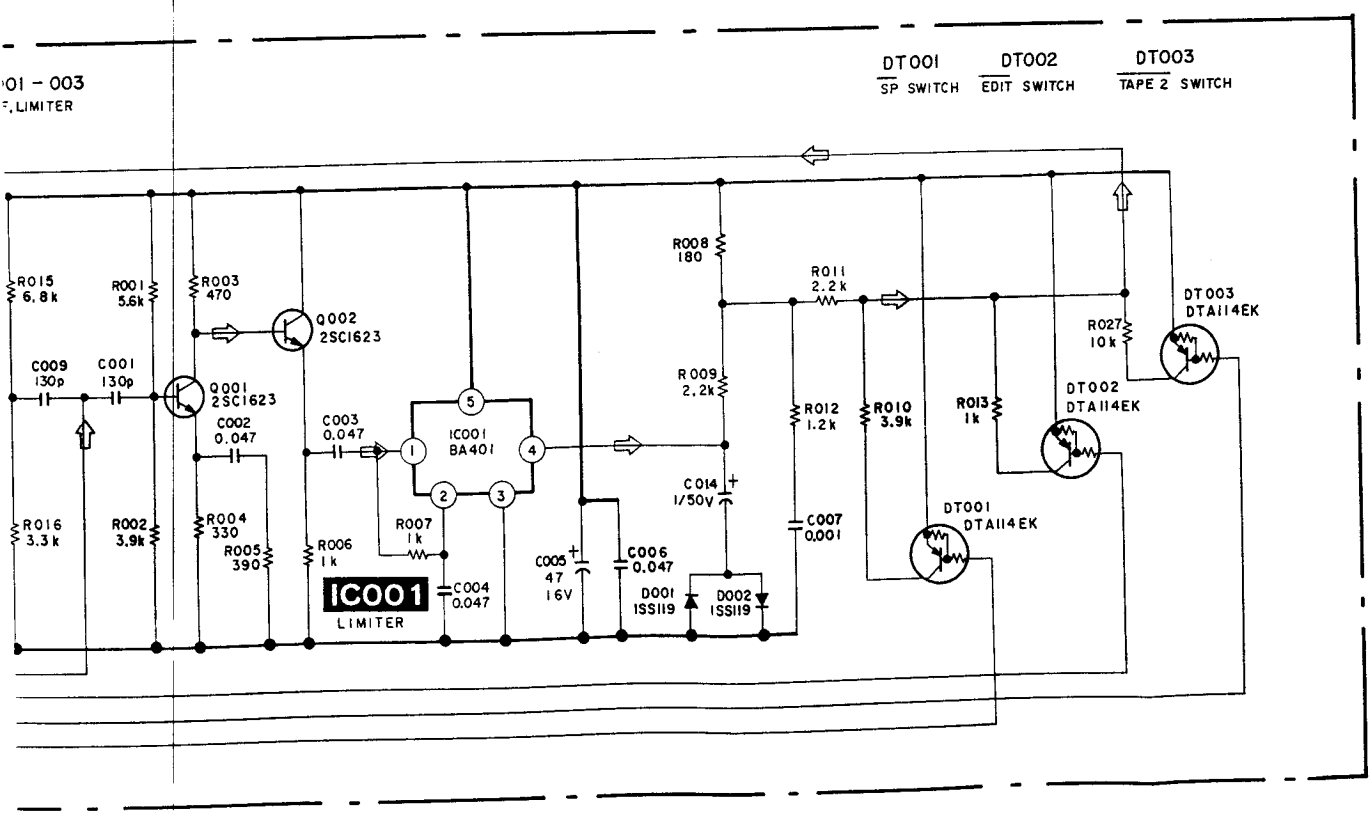


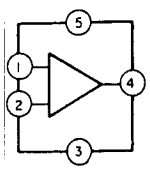


IC011
BS6324

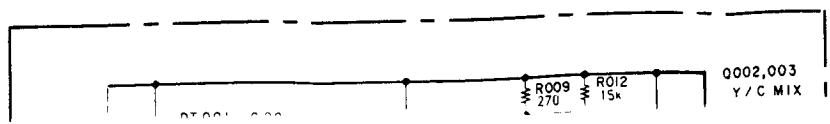

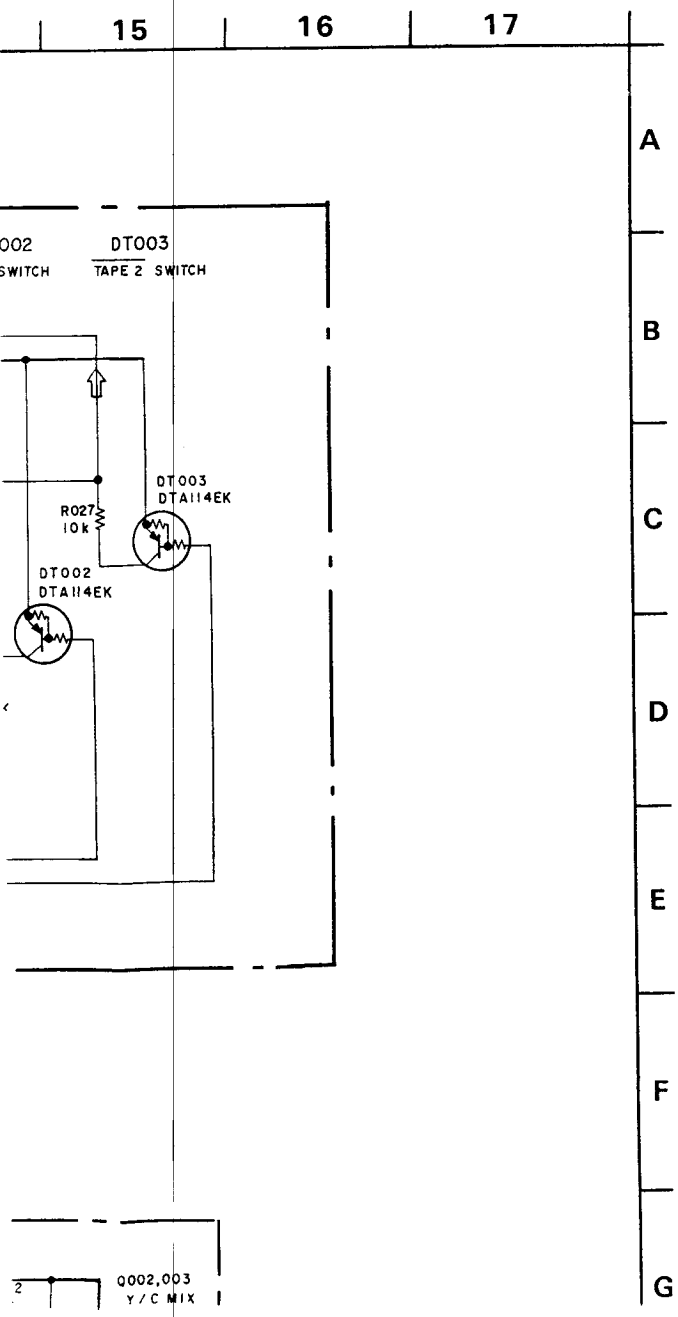


**Note:**

- Caution when replacing chip parts.
  New parts must be attached after removal of chip.
  Be careful not to heat the minus side of tantalum capacitor, because it is damaged by the heat.
- All resistors are in ohms, 1/10W unless otherwise noted.
  kΩ: 1000Ω, MΩ: 1000kΩ.
- All capacitors are in μF unless otherwise noted. pF : μμF.
  50V or less are not indicated except for electrolytice. and tantalums.
- All variable and adjustable resistors have characteristic curve B, unless otherwise noted.
- ▭ : adjustment for repair.
- ▬ : B + bus.
- Voltages are dc with respect to ground unless otherwise noted.
- Readings are taken with a colour-bar signal input.
- Readings are taken with a digital multimeter (DC10MΩ).
- Voltage variations may be noted due to normal production tolerances.

When indicating parts by reference number, please include the board name.

- **Signal path**
  - ➡ : REC Y Signal
  - ⇨ : PB Y Signal
  - ➡ : REC CHROMA Signal
  - ⇨ : PB CHROMA Signal
  - ➡ : REC Y/CHROMA Signal

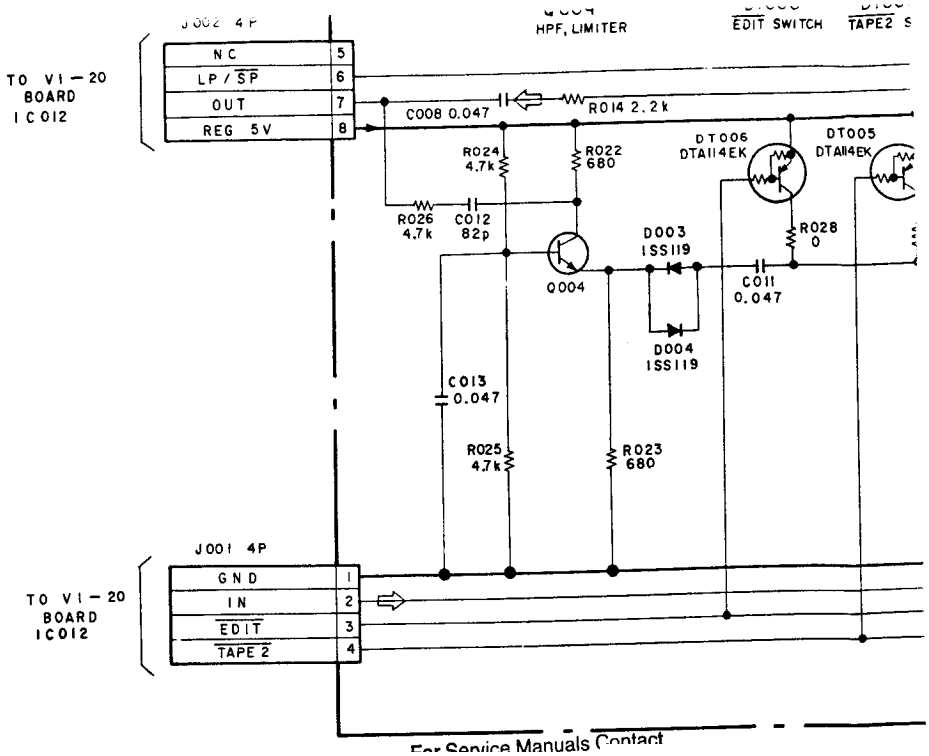


For Service Manuals Contact

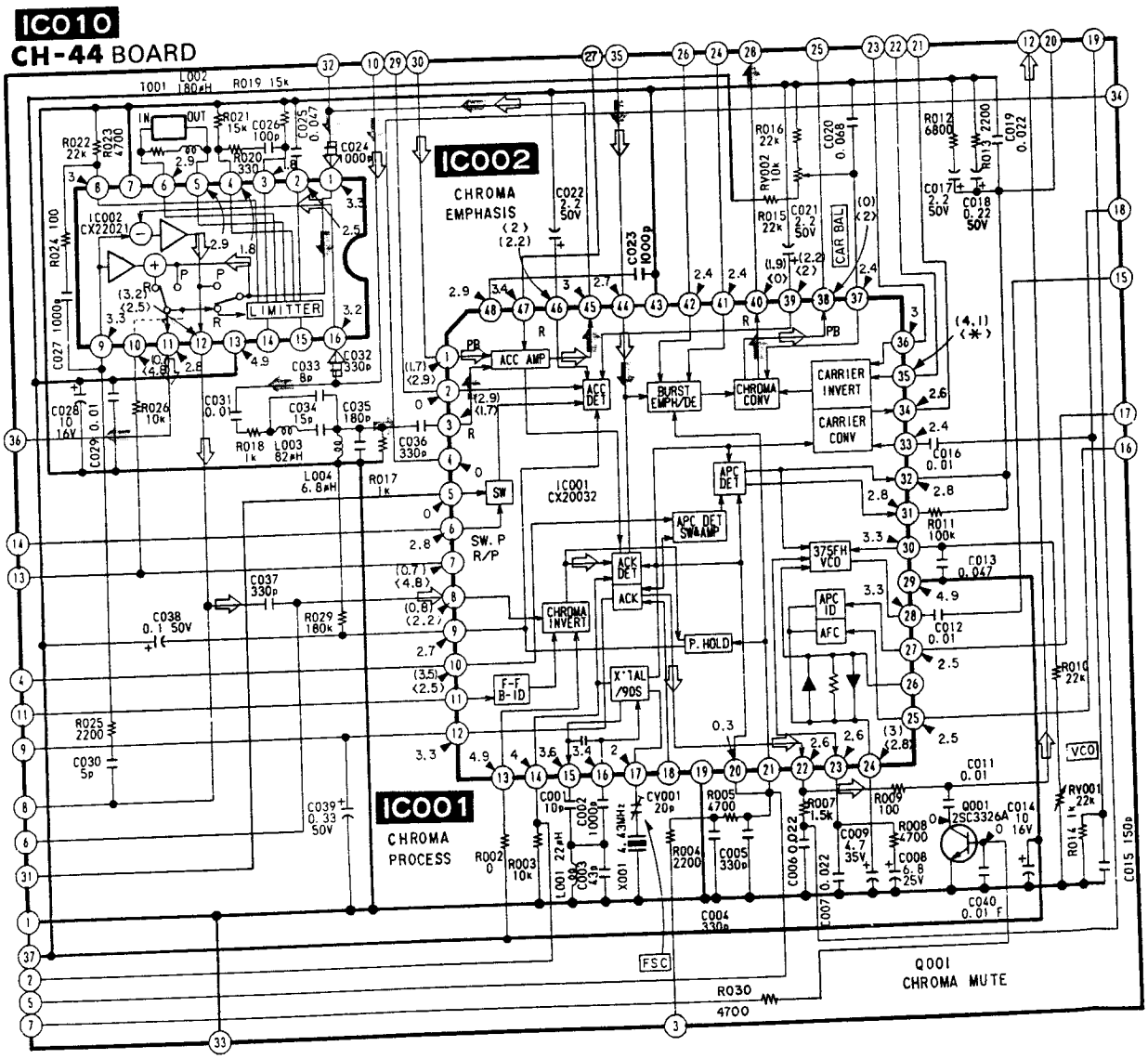

HPF, LIMITER | EDIT SWITCH | TAPE2 SWITCH | SP SWITCH | HPF, LIMITER

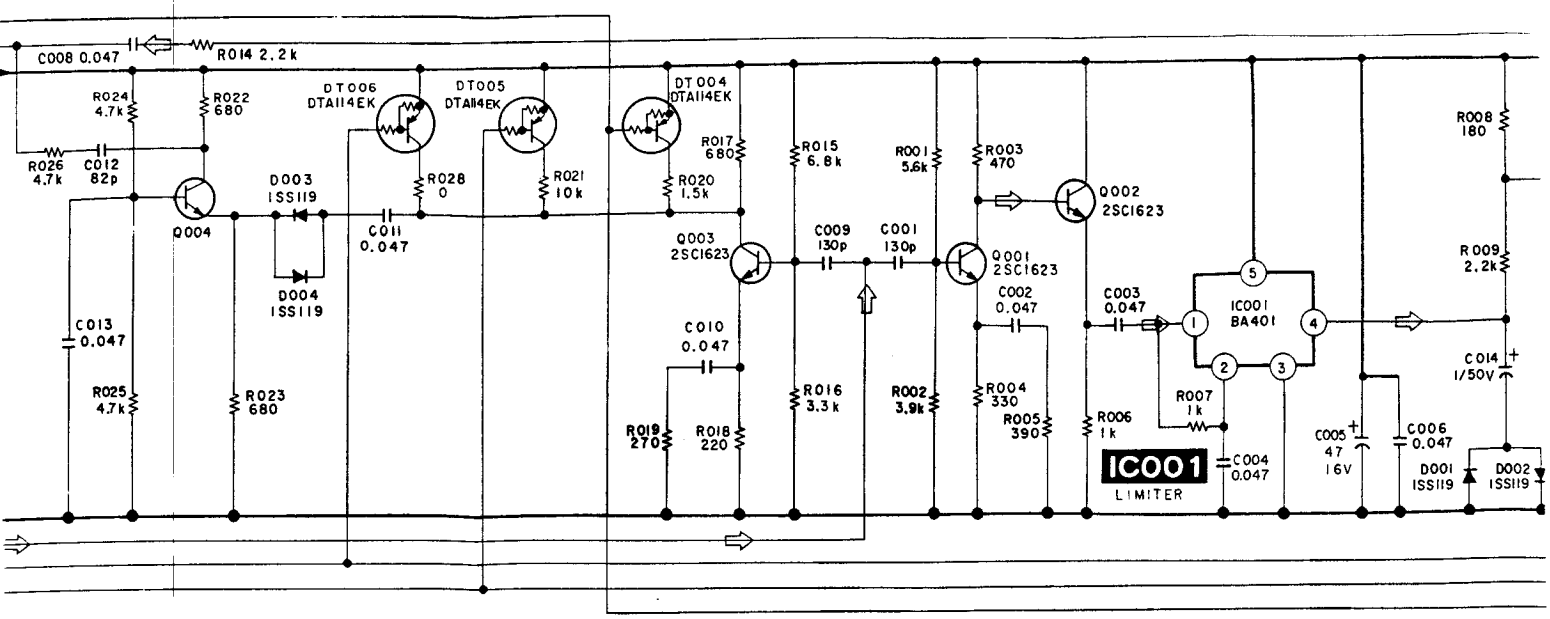


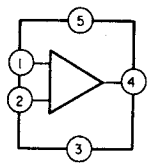


**IC011**
BS6324

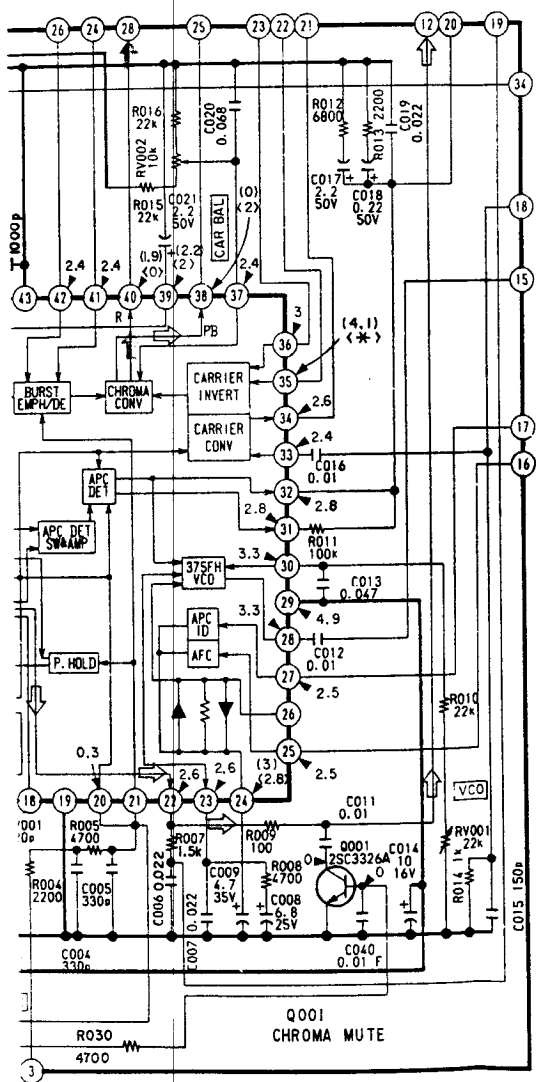


no mark : LP REC/PB mode
( ) : LP REC mode
< > : LP PB mode
Marked * is not able to measure the voltage of its position

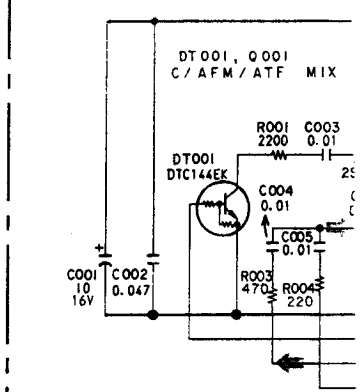


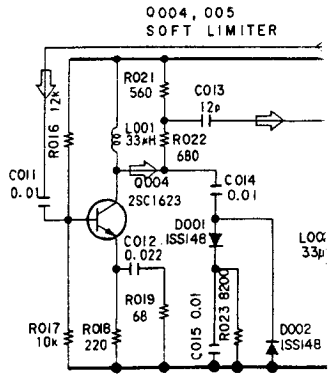

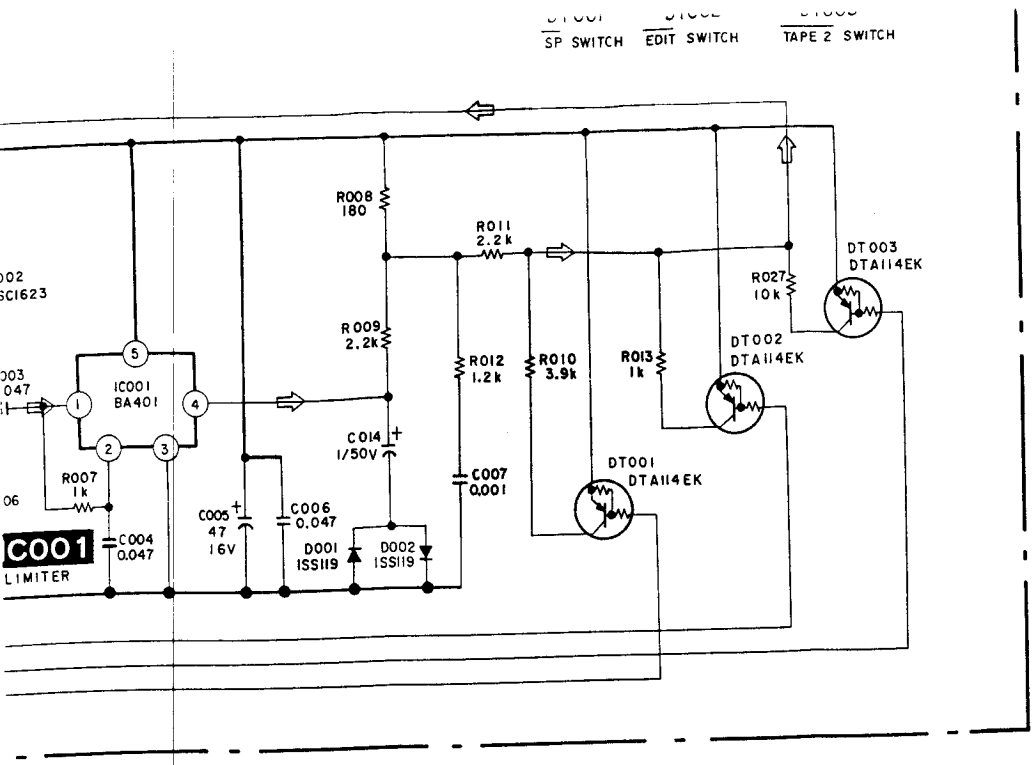


**IC011**
**BS6324**

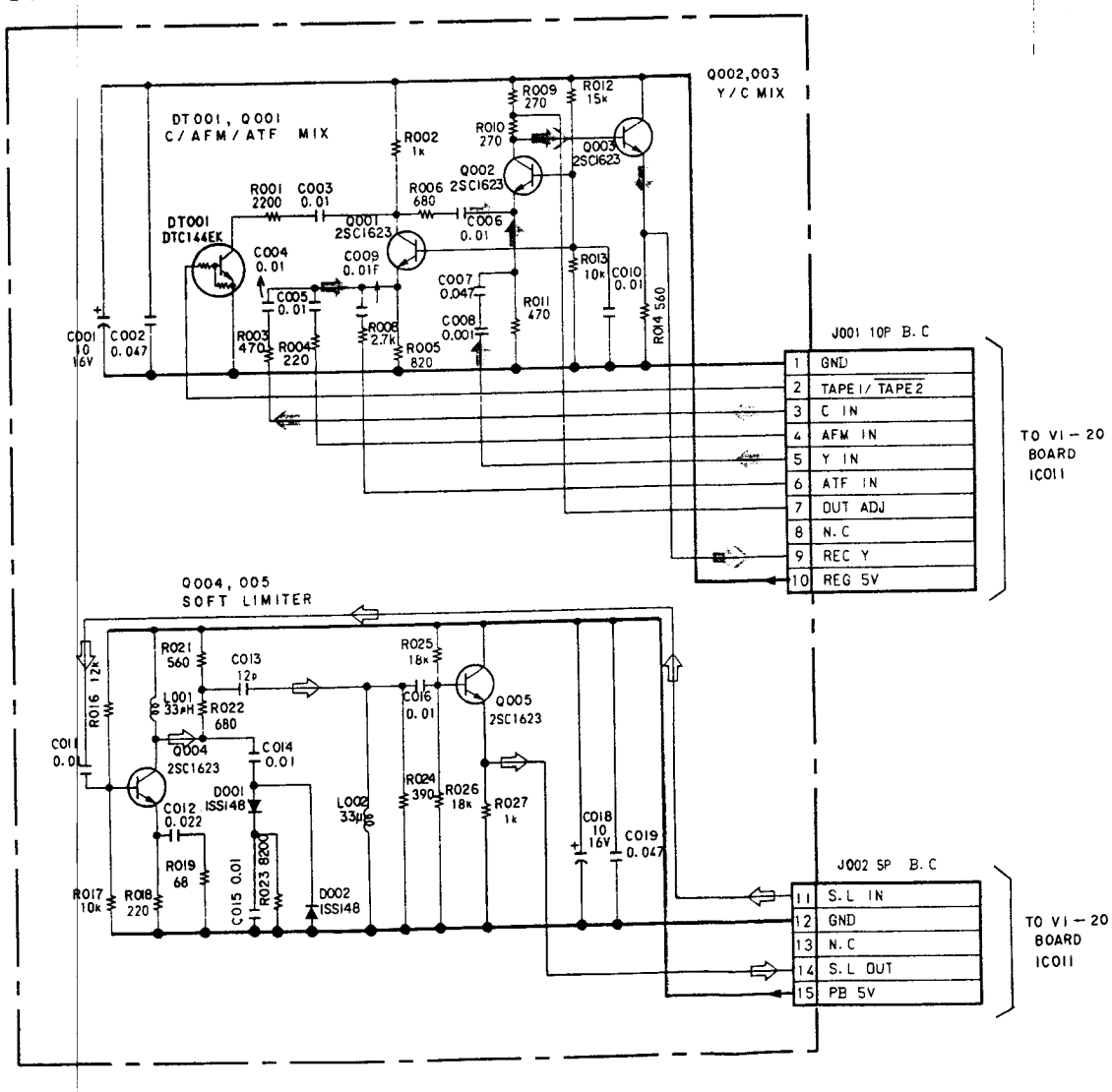


- All capaci... 50V or less tantalums.
- All variable unless other
- ▭ : adju
- ▬ : B +
- Voltages ar
- Readings ar
- Readings ar
- Voltage va tolerances.

When indicat ence numb the board nar

- **Signal path**
  - : RE
  - : PB
  - : RE
  - : PB
  - : RE

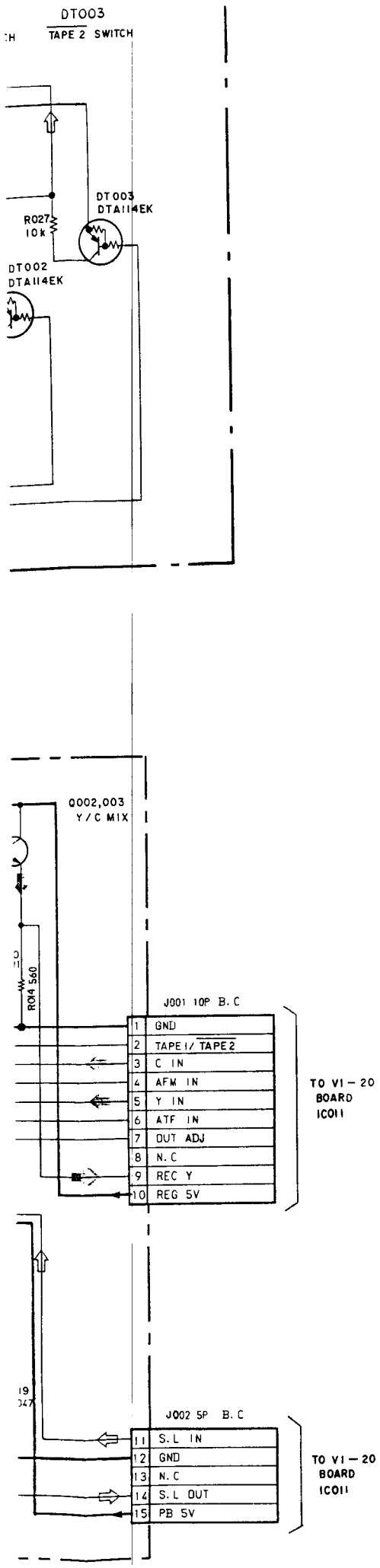


- All capacitors are in μF unless otherwise noted. pF : μμF. 50V or less are not indicated except for electrolytice. and tantalums.
- All variable and adjustable resistors have characteristic curve B, unless otherwise noted.
- ▭ : adjustment for repair.
- ——— : B + bus.
- Voltages are dc with respect to ground unless otherwise noted.
- Readings are taken with a colour-bar signal input.
- Readings are taken with a digital multimeter (DC10MΩ).
- Voltage variations may be noted due to normal production tolerances.

When indicating parts by reference number, please include the board name.

- **Signal path**
  - ➡ : REC Y Signal
  - ⇨ : PB Y Signal
  - ➡ : REC CHROMA Signal
  - ⇨ : PB CHROMA Signal
  - ➡ : REC Y/CHROMA Signal

**Note:**

- ○— : indicates a le
- ●— : indicates a le
- ⊗ : Through hole
- : Pattern from
- : Pattern of th
- : B+ pattern fr
- Digital transistor (T
  Refer to the TC-

When indicating pa
ence number, pl
the board name.

Caution:
Pattern face side: Pa
(Solder Side) th
Parts face side: Pa
(Component Side) th

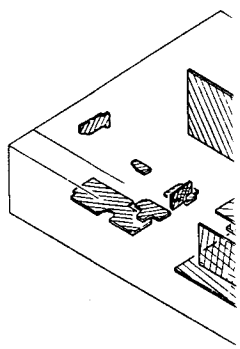

**Note:**

- ○— : indicates a lead wire mounted on the component side.
- ●— : indicates a lead wire mounted on the printed side.
- ⊗ : Through hole.
- : Pattern from the side which enables seeing.
- : Pattern of the rear side.
- : B+ pattern from the side which enables seeing.
- Digital transistor (TC-3:Q007) transistor with resistors.
  Refer to the TC-3 board schematic diagram for digital transistor.

When indicating parts by reference number, please include the board name.

**Caution:**

Pattern face side: (Solder Side) Parts on the pattern face side seen from the pattern face are indicated.

Parts face side: (Component Side) Parts on the parts face side seen from the parts face are indicated.

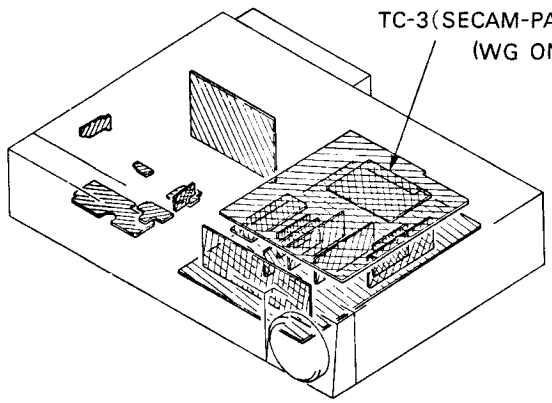


| | |
|---|---|
| CV1 | C-3 |
| D1 | D-7 |
| D2 | C-4 |
| IC1 | D-3 |
| IC2 | B-6 |
| IC3 | C-6 |
| IC4 | A-2 |
| LV1 | D-5 |
| LV2 | B-4 |
| LV3 | B-3 |
| Q1 | G-1 |
| Q2 | G-1 |
| Q3 | H-2 |
| Q4 | B-2 |
| Q5 | B-2 |
| Q6 | C-3 |
| Q7 | C-7 |
| Q8 | B-8 |
| Q9 | B-8 |
| Q10 | A-7 |
| Q12 | D-2 |
| RV1 | B-5 |
| RV2 | C-5 |
| RV3 | E-6 |
| RV4 | C-2 |
| RV5 | E-5 |
| RV6 | C-8 |
| RV7 | C-3 |
| TP1 | B-4,I-4 |

nt side.
ide.

rs.
digital transistor.

PAL CONVERSION)
ONLY)

| | |
|---|---|
| CV1 | C-3 |
| D1 | D-7 |
| D2 | C-4 |
| IC1 | D-3 |
| IC2 | B-6 |
| IC3 | C-6 |
| IC4 | A-2 |
| LV1 | D-5 |
| LV2 | B-4 |
| LV3 | B-3 |
| Q1 | G-1 |
| Q2 | G-1 |
| Q3 | H-2 |
| Q4 | B-2 |
| Q5 | B-2 |
| Q6 | C-3 |
| Q7 | C-7 |
| Q8 | B-8 |
| Q9 | B-8 |
| Q10 | A-7 |
| Q12 | D-2 |
| RV1 | B-5 |
| RV2 | C-5 |
| RV3 | E-6 |
| RV4 | C-2 |
| RV5 | E-5 |
| RV6 | C-8 |
| RV7 | C-3 |
| TP1 | B-4,I-4 |

## TC-3(SECAM-PAL CONVERSION) PRINTED WIRING BOAR

—Ref. No. TC-3 BOARD : 3, 500 series—

【TC-3 BOARD】 (COMPONENT SIDE)

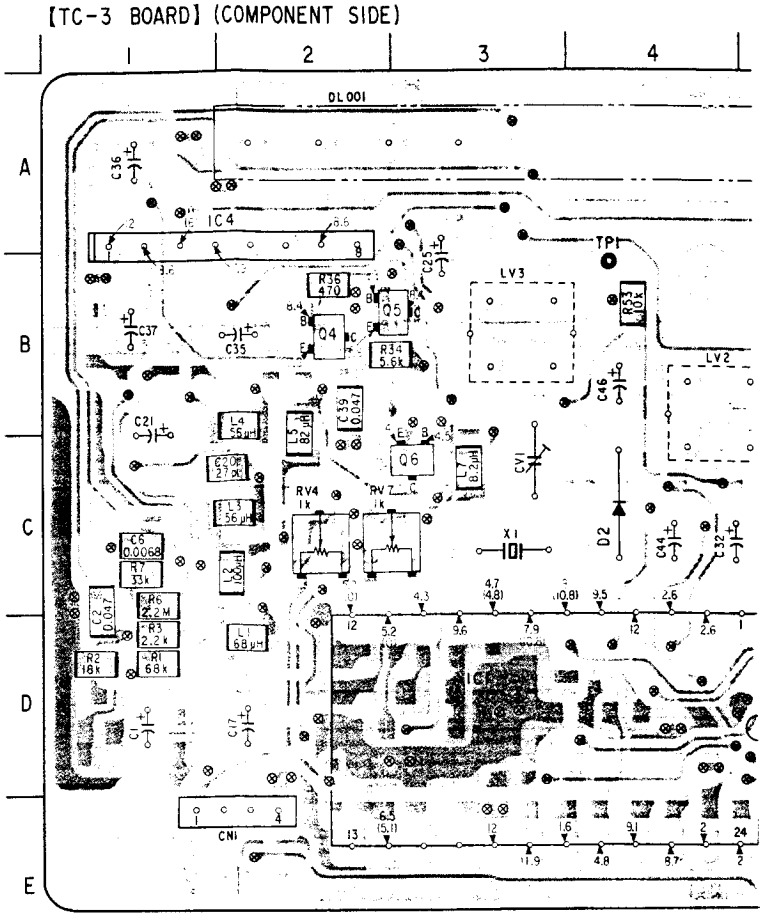


【TC-3 BOARD】 (SOLDER SIDE)

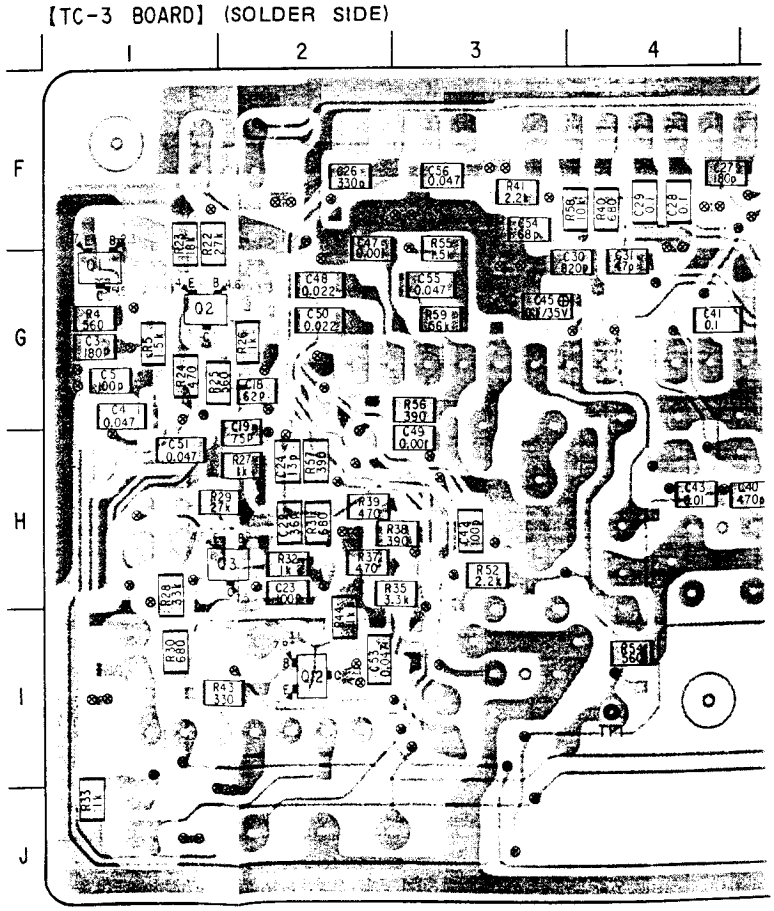

## AM-PAL CONVERSION) PRINTED WIRING BOARD (WG Model)

CC-3 BOARD : 3, 500 series—

RD] (COMPONENT SIDE)

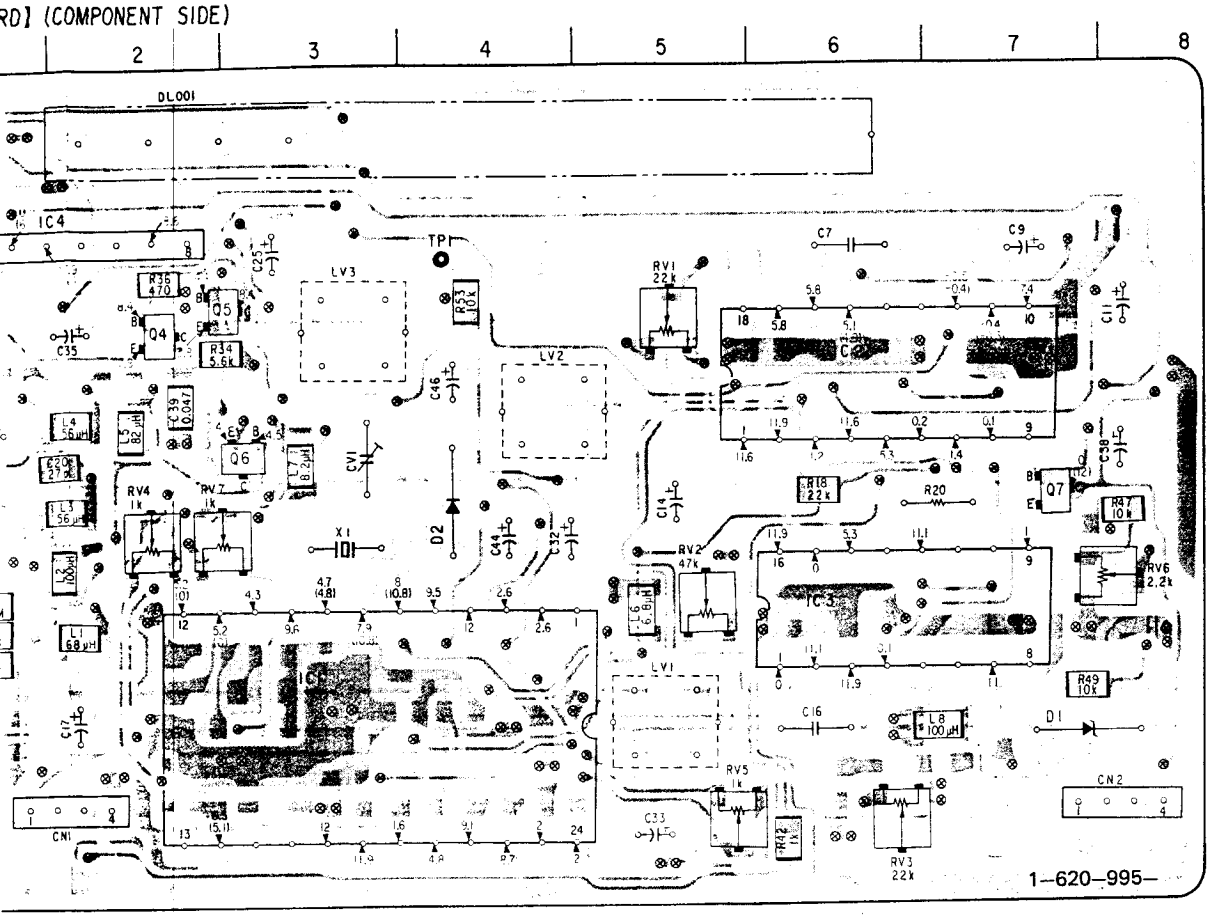


RD] (SOLDER SIDE)

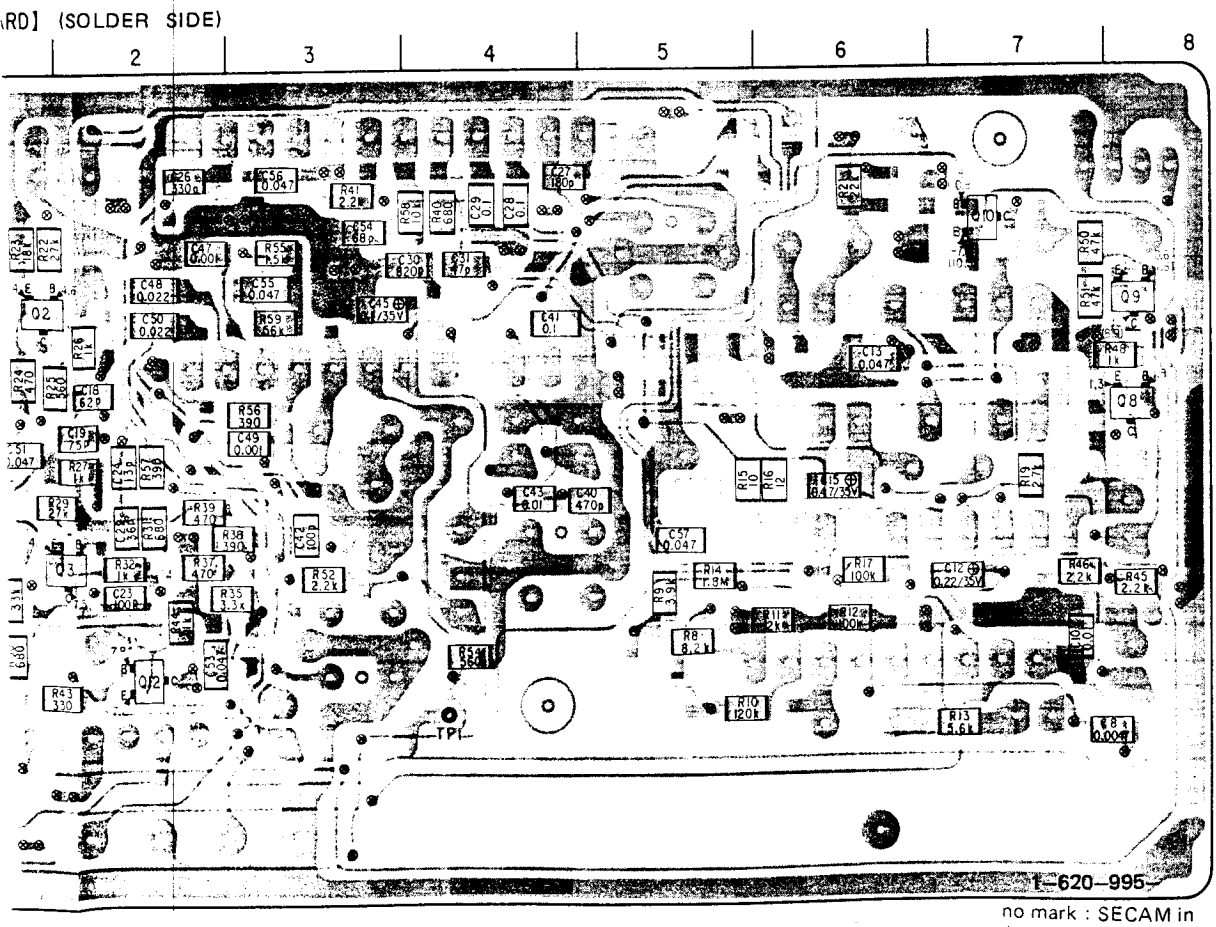


no mark : SECAM in
( ) : PAL in

## TC-3(SECAM-PAL CONVERSION) SCHEMATIC DIAGRAM (WG Model)

—Ref. No. TC-3 BOARD : 3, 500 series—

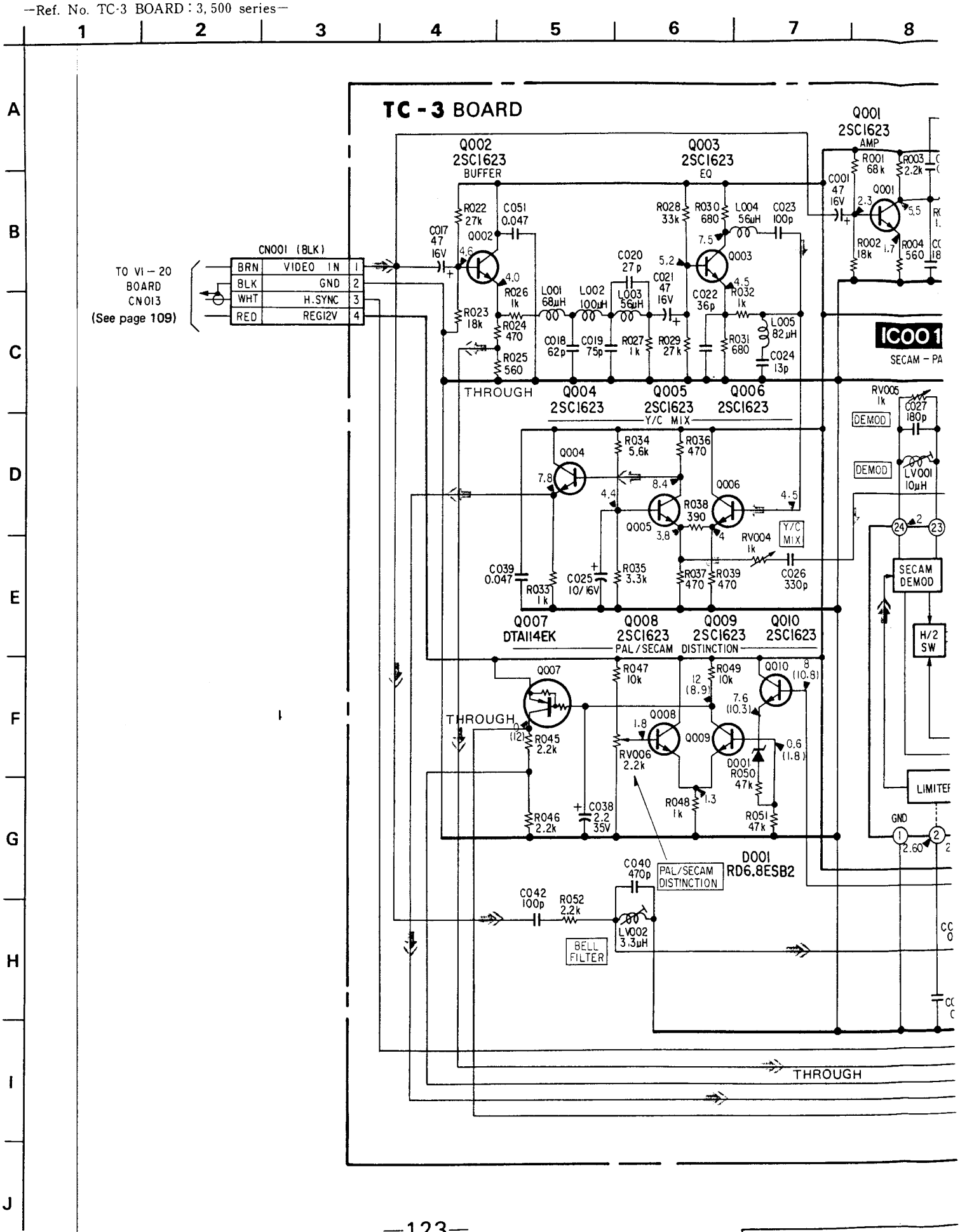




VIDEO(4) V

## 3 BOARD

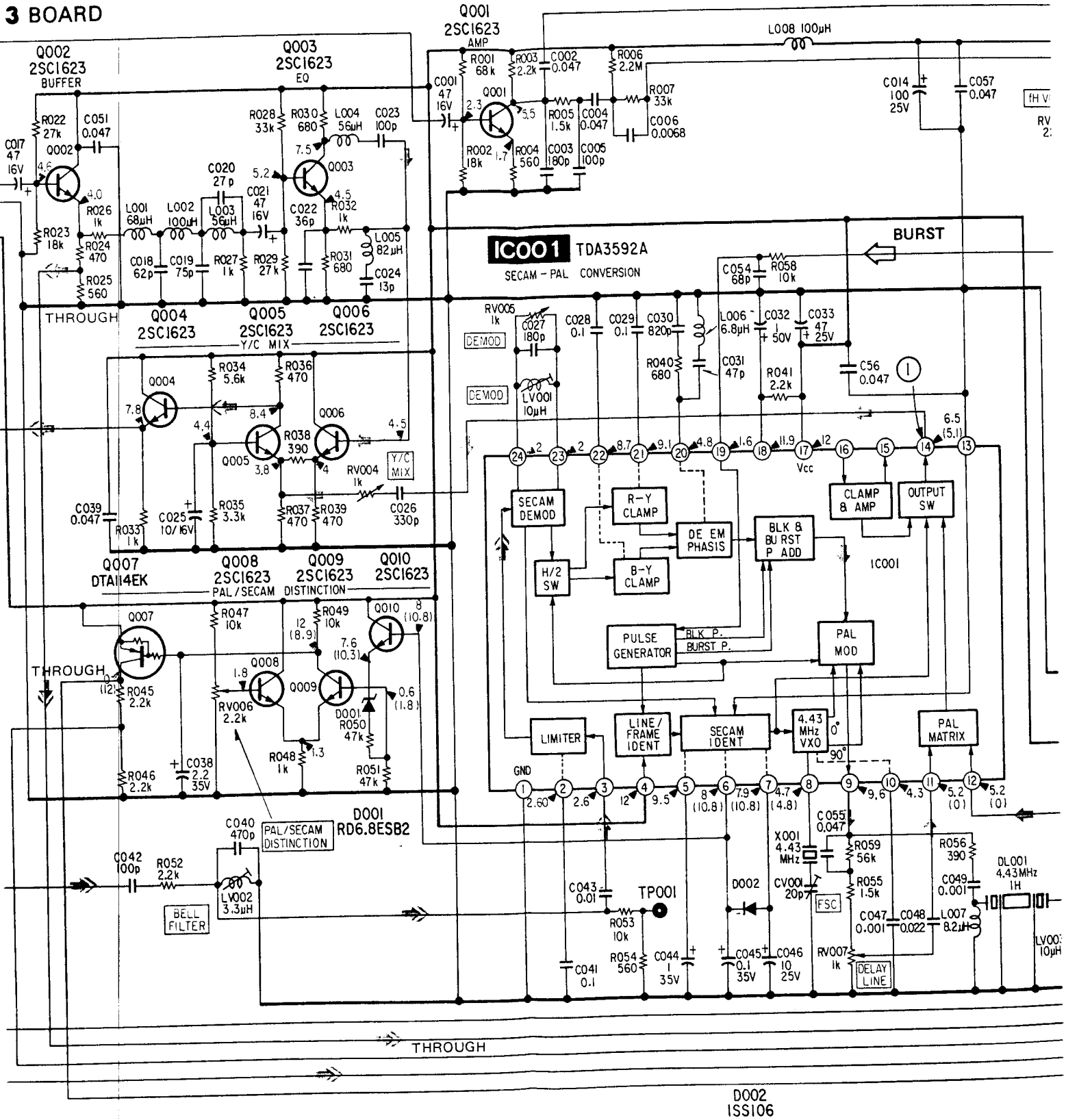
Q001 2SC1623 AMP
Q002 2SC1623 BUFFER
Q003 2SC1623 EQ
Q004 2SC1623
Q005 2SC1623
Q006 2SC1623
Y/C MIX
Q007 DTA114EK
Q008 2SC1623
Q009 2SC1623
Q010 2SC1623
PAL/SECAM DISTINCTION
IC001 TDA3592A
SECAM - PAL CONVERSION
BURST
DEMOD
SECAM DEMOD
R-Y CLAMP
B-Y CLAMP
H/2 SW
DE EM PHASIS
BLK & BURST P ADD
CLAMP & AMP
OUTPUT SW
PULSE GENERATOR
BLK P.
BURST P.
PAL MOD
LIMITER
LINE/ FRAME IDENT
SECAM IDENT
4.43 MHz VXO
PAL MATRIX
Vcc
GND
D001 RD6.8ESB2
D002 1SS106
TP001
X001 4.43 MHz
DL001 4.43MHz 1H
DELAY LINE
FSC
BELL FILTER
THROUGH

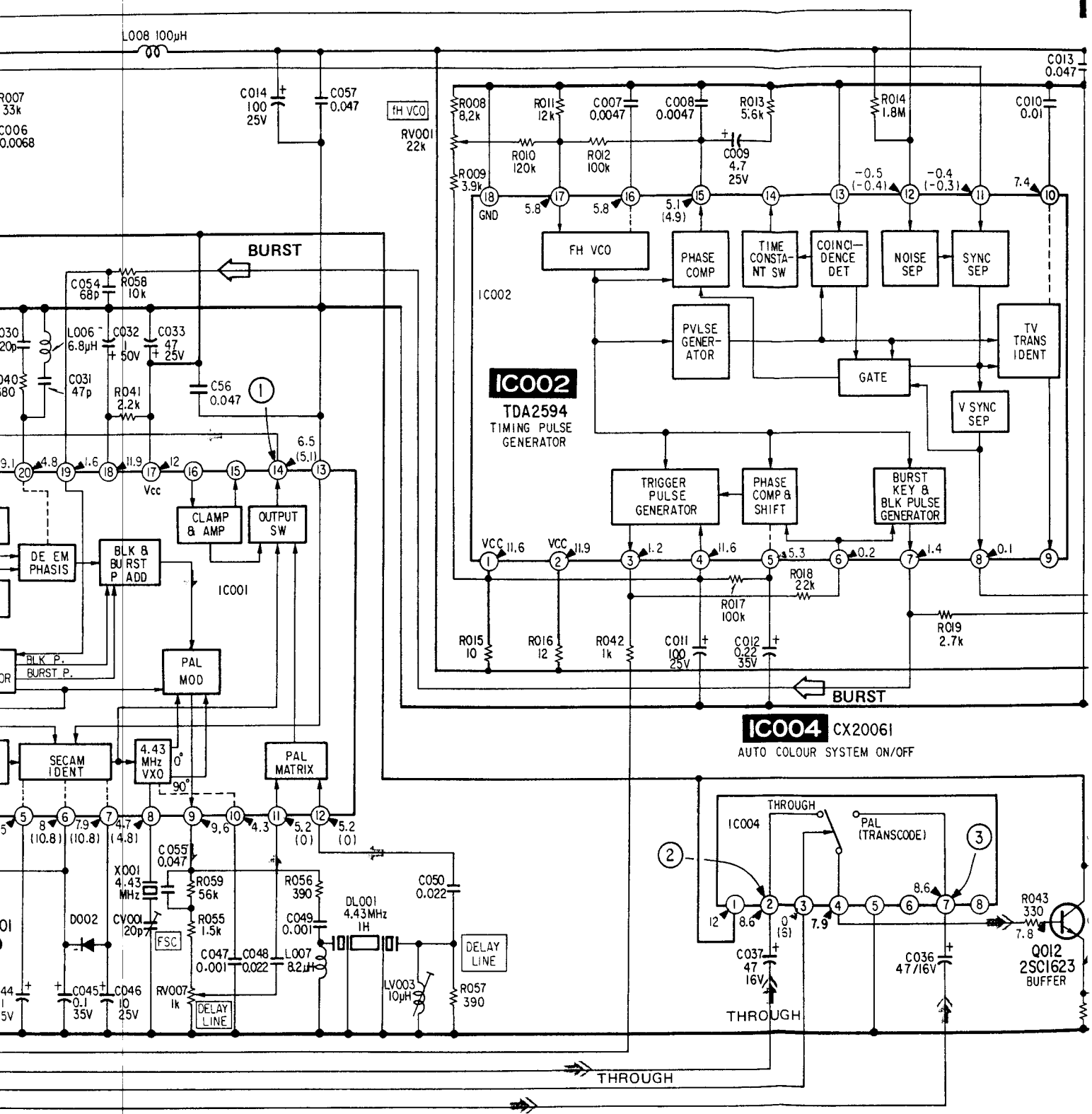
L008 100µH
C014 100 25V
C057 0.047
fH VCO
RV001 22k
R007 33k
C006 0.0068
R008 8.2k
R011 12k
C007 0.0047
C008 0.0047
R013 5.6k
R014 1.8M
C010 0.01
C013 0.047
R010 120k
R012 100k
C009 4.7 25V
R009 3.9k
GND
5.8
5.8
5.1 (4.9)
-0.5 (-0.4)
-0.4 (-0.3)
7.4
FH VCO
PHASE COMP
TIME CONSTANT SW
COINCIDENCE DET
NOISE SEP
SYNC SEP
IC002
PULSE GENERATOR
TV TRANS IDENT
GATE
V SYNC SEP
IC002
TDA2594
TIMING PULSE GENERATOR
TRIGGER PULSE GENERATOR
PHASE COMP & SHIFT
BURST KEY & BLK PULSE GENERATOR
VCC 11.6
VCC 11.9
1.2
11.6
5.3
0.2
1.4
0.1
R018 2.2k
R017 100k
R019 2.7k
R015 10
R016 12
R042 1k
C011 100 25V
C012 0.22 35V
BURST
C054 68p
R058 10k
L006 6.8µH
C032 1 50V
C033 47 25V
C031 47p
R041 2.2k
C56 0.047
6.5 (5.1)
Vcc
CLAMP & AMP
OUTPUT SW
DE EM PHASIS
BLK & BURST P ADD
IC001
BLK P.
BURST P.
PAL MOD
IC004 CX20061
AUTO COLOUR SYSTEM ON/OFF
SECAM IDENT
4.43 MHz VXO
0°
90°
PAL MATRIX
8 (10.8)
7.9 (10.8)
4.7 (4.8)
9.6
4.3
5.2 (0)
5.2 (0)
C055 0.047
X001 4.43 MHz
R059 56k
R055 1.5k
CV001 20p
FSC
D002
R056 390
C049 0.001
C047 0.001
C048 0.022
L007 8.2µH
DL001 4.43MHz 1H
C050 0.022
DELAY LINE
LV003 10µH
R057 390
RV007 1k
DELAY LINE
C045 0.1 35V
C046 10 25V
THROUGH
IC004
PAL (TRANSCODE)
THROUGH
8.6
12
8.6
0 (5)
7.9
C037 47 16V
C036 47/16V
R043 330
7.8
Q012 2SC1623
BUFFER
THROUGH
D002
1SS106

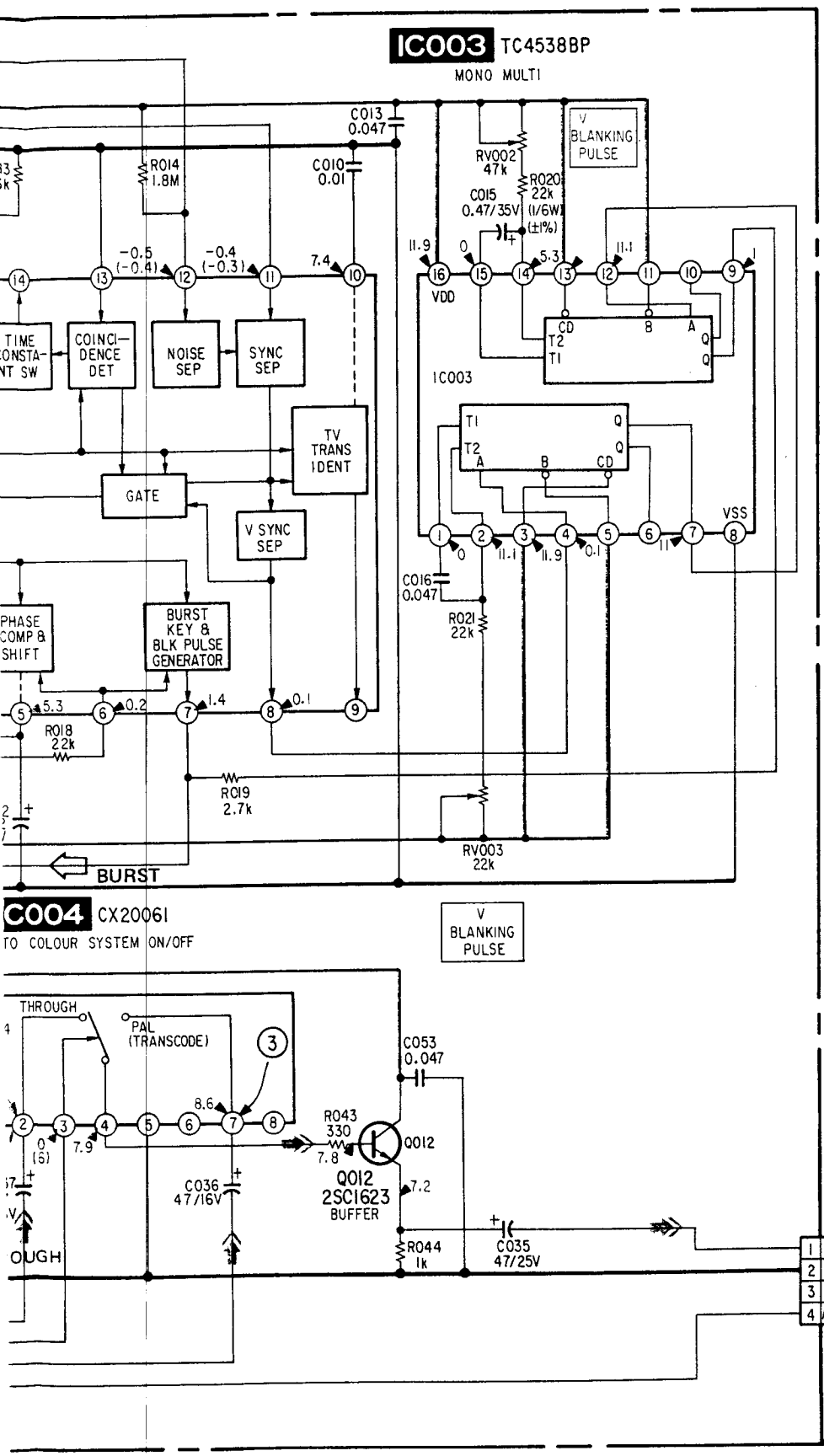
IC003 TC4538BP
MONO MULTI
C013 0.047
C010 0.01
R014 1.8M
RV002 47k
R020 22k (1/6W) (±1%)
C015 0.47/35V
V BLANKING PULSE
TIME CONSTANT SW
COINCIDENCE DET
NOISE SEP
SYNC SEP
TV TRANS IDENT
GATE
V SYNC SEP
BURST KEY & BLK PULSE GENERATOR
PHASE COMP & SHIFT
R018 2.2k
R019 2.7k
C016 0.047
R021 22k
RV003 22k
VDD
VSS
IC003
BURST
C004 CX20061
TO COLOUR SYSTEM ON/OFF
THROUGH
PAL (TRANSCODE)
C053 0.047
R043 330
Q012
Q012 2SC1623 BUFFER
C036 47/16V
R044 1k
C035 47/25V
CN002 (WHT)
1 VIDEO OUT YEL
2 GND GRY
3 N.C GRY
4 AUTO COLOUR ON/OFF GRY
TO VI-20 BOARD CN012
(See page 109)
VIDEO OUT SIGNAL (AUTO COLOUR ON/C
• When ON, the signal is passing the transcorder. signal goes out unless otherwise operated wrong.
• When OFF, the signal is the THROUGH signal. the PAL signal goes out, but when receiving broadcasting, the SECAM signal goes out.
no mark : SECAM in
( ) : PAL in

A B C D E F G H I J

**Note:**

- Caution when replacing chip parts.
  New parts must be attached after removal of chip.
  Be careful not to heat the minus side of tantalum capacitor, because it is damaged by the heat.
- All resistors are in ohms, 1/10W unless otherwise noted.
  kΩ: 1000Ω, MΩ: 1000kΩ.
- All capacitors are in μF unless otherwise noted. pF : μμF.
  50V or less are not indicated except for electrolytice. and tantalums.
- All variable and adjustable resistors have characteristic curve B, unless otherwise noted.
- ▭ : adjustment for repair.
- ——— : B + bus.
- Voltages are dc with respect to ground unless otherwise noted.
- Readings are taken with a colour-bar signal input.
- Readings are taken with a digital multimeter (DC10MΩ).
- Voltage variations may be noted due to normal production tolerances.

When indicating parts by reference number, please include the board name.

- **Signal path**
  - ➡ : REC Y Signal
  - ➡ : REC CHROMA Signal
  - ➡ : REC Y/CHROMA Signal

**TC-3** BOARD

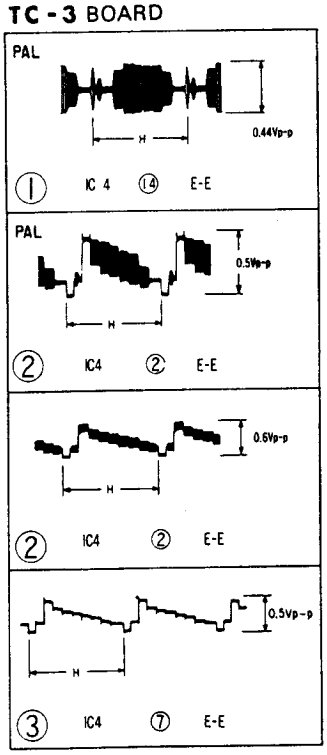


DEO OUT SIGNAL (AUTO COLOUR ON/OFF)

**When ON, the signal is passing the transcorder. The PAL signal goes out unless otherwise operated wrong.**

**When OFF, the signal is the THROUGH signal. Generally the PAL signal goes out, but when receiving the DDR broadcasting, the SECAM signal goes out.**

·T)

| | |
|---|---|
| | YEL |
| | GRY |
| | GRY |
| OFF | GRY |

TO V1-20 BOARD
CN012
(See page 109)

SECAM in
PAL in

**Note:**

- ○— : indicates a lead wire mounted on the component side.
- ●— : indicates a lead wire mounted on the printed side.
- ⊗ : Through hole.
- : Pattern from the side which enables seeing.
- : Pattern of the rear side.
- : B+ pattern from the side which enables seeing.

When indicating parts by reference number, please include the board name.

**Caution:**

Pattern face side: (Solder Side) Parts on the pattern face side seen from the pattern face are indicated.

Parts face side: (Component Side) Parts on the parts face side seen from the parts face are indicated.

SP-2 (SYSTEM CONTROL)

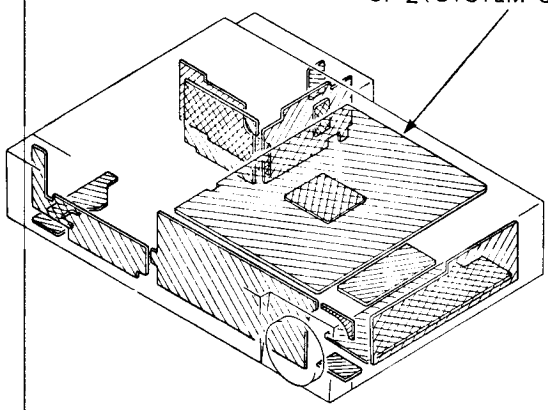

LS-9
(LOADING SWITCH)

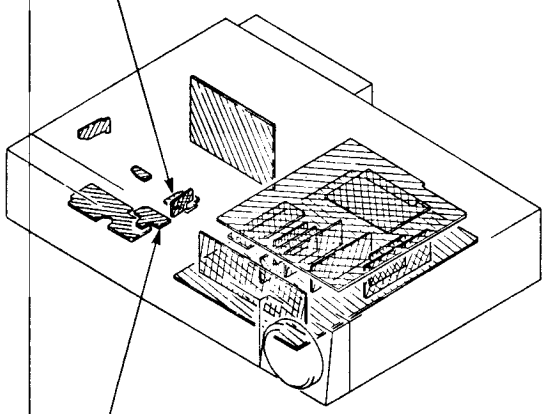

MS-4
(MODE SWITCH, CONTROL MOTOR)

| | | | | | | | |
|---|---|---|---|---|---|---|---|
| D025 | A-5 | Q010 | I-3 | Q401 | L-4 | TP242 | E-26 |
| D021 | A-28 | Q011 | H-31 | Q500 | F-10 | TP603 | G-20 |
| D060 | C-4 | Q012 | H-31 | Q501 | F-10 | TP604 | D-18 |
| D080 | K-15 | Q013 | G-3 | Q502 | F-9 | TP607 | G-22 |
| D081 | G-17 | Q014 | D-10 | Q601 | C-13 | TP608 | C-21 |
| D082 | G-16 | Q015 | D-10 | Q602 | C-14 | TP609 | E-18 |
| D106 | C-16 | Q020 | B-5 | Q604 | B-14 | | |
| D107 | B-16 | Q021 | B-28 | Q605 | B-21 | | |
| D108 | B-16 | Q022 | B-28 | Q606 | J-18 | | |
| D120 | C-16 | Q023 | B-5 | Q701 | L-9 | | |
| D203 | B-2 | Q054 | I-22 | Q702 | L-9 | | |
| D204 | F-26 | Q055 | I-22 | Q703 | L-9 | | |
| D205 | B-7 | Q060 | F-3 | Q704 | M-24 | | |
| D206 | D-7 | Q070 | B-9 | Q705 | K-23 | | |
| D208 | H-24 | Q071 | B-24 | Q706 | K-24 | | |
| D209 | I-26 | Q080 | K-15 | Q707 | L-9 | | |
| D211 | K-27 | Q081 | K-18 | Q708 | L-10 | | |
| D212 | L-3 | Q082 | J-16 | Q709 | L-25 | | |
| D213 | I-22 | Q083 | H-17 | Q710 | M-21 | | |
| D214 | J-30 | Q084 | H-16 | Q711 | L-10 | | |
| D215 | D-27 | Q085 | G-16 | Q712 | K-11 | | |
| D216 | C-6 | Q086 | H-16 | Q713 | L-10 | | |
| D217 | I-24 | Q087 | E-17 | Q714 | L-23 | | |
| D218 | K-30 | Q088 | F-16 | Q715 | L-22 | | |
| D220 | B-1 | Q090 | D-23 | Q716 | M-10 | | |
| D221 | B-1 | Q091 | D-24 | Q717 | K-10 | | |
| D222 | B-2 | Q103 | B-16 | | | | |
| D223 | G-6 | Q120 | K-16 | RV201 | J-26 | | |
| D225 | I-6 | Q121 | C-17 | RV202 | J-26 | | |
| D226 | K-30 | Q122 | D-16 | RV203 | J-26 | | |
| D227 | H-11 | Q123 | K-16 | RV204 | J-26 | | |
| D230 | D-31 | Q201 | B-5 | RV205 | L-32 | | |
| D231 | F-7 | Q202 | B-28 | RV206 | K-31 | | |
| D232 | K-7 | Q203 | B-27 | RV207 | L-31 | | |
| D233 | E-27 | Q204 | B-6 | RV208 | L-32 | | |
| D390 | F-27 | Q205 | K-26 | RV209 | D-25 | | |
| D391 | J-14 | Q206 | C-30 | RV210 | M-29 | | |
| D392 | I-10 | Q207 | C-2 | RV212 | G-25 | | |
| D393 | I-10 | Q208 | D-32 | RV215 | K-25 | | |
| D501 | F-11 | Q209 | D-30 | RV216 | K-25 | | |
| D502 | H-13 | Q210 | H-11 | RV217 | G-27 | | |
| D600 | B-13 | Q211 | K-4 | RV218 | G-26 | | |
| D601 | H-14 | Q212 | A-26 | RV601 | B-20 | | |
| D603 | I-14 | Q213 | B-7 | RV602 | F-18 | | |
| D604 | H-14 | Q214 | C-7 | RV603 | C-21 | | |
| D701 | K-5 | Q215 | C-7 | RV604 | B-21 | | |
| D702 | K-23 | Q216 | C-6 | RV701 | M-27 | | |
| | | Q217 | D-6 | | | | |
| IC001 | H-30 | Q218 | C-26 | TP001 | G-29 | | |
| IC002 | F-31 | Q219 | C-27 | TP002 | I-30 | | |
| IC003 | C-23 | Q220 | C-7 | TP003 | E-32 | | |
| IC004 | F-29 | Q221 | B-6 | TP004 | G-29 | | |
| IC005 | F-28 | Q222 | C-26 | TP005 | G-29 | | |
| IC007 | C-29 | Q223 | C-7 | TP201 | I-23 | | |
| IC008 | D-29 | Q224 | C-27 | TP202 | G-24 | | |
| IC009 | D-30 | Q225 | D-6 | TP203 | G-22 | | |
| IC010 | L-18 | Q226 | K-9 | TP204 | G-22 | | |
| IC011 | H-17 | Q227 | K-10 | TP205 | G-22 | | |
| IC012 | J-17 | Q228 | J-6 | TP206 | J-21 | | |
| IC120 | K-17 | Q229 | F-3 | TP207 | G-24 | | |
| IC121 | L-17 | Q230 | F-4 | TP208 | K-29 | | |
| IC201 | E-26 | Q232 | K-23 | TP209 | L-22 | | |
| IC202 | J-1 | Q233 | K-30 | TP210 | B-27 | | |
| IC204 | H-23 | Q235 | H-11 | TP211 | B-27 | | |
| IC205 | K-21 | Q236 | I-6 | TP212 | J-27 | | |
| IC206 | D-32 | Q237 | C-9 | TP213 | K-28 | | |
| IC207 | B-30 | Q238 | G-3 | TP214 | K-25 | | |
| IC208 | B-32 | Q239 | F-26 | TP215 | J-24 | | |
| IC209 | B-26 | Q240 | E-26 | TP216 | K-26 | | |
| IC210 | K-7 | Q242 | K-12 | TP217 | K-26 | | |
| IC211 | I-5 | Q243 | F-25 | TP219 | M-26 | | |
| IC212 | J-5 | Q244 | F-7 | TP220 | I-30 | | |
| IC213 | K-3 | Q245 | K-3 | TP221 | L-27 | | |
| IC214 | J-2 | Q246 | H-28 | TP222 | J-29 | | |
| IC215 | J-2 | Q248 | I-31 | TP223 | L-26 | | |
| IC216 | H-7 | Q249 | K-31 | TP224 | J-23 | | |
| IC217 | E-8 | Q250 | K-31 | TP225 | E-27 | | |
| IC218 | F-6 | Q251 | L-31 | TP226 | G-24 | | |
| IC219 | E-25 | Q252 | L-30 | TP227 | L-27 | | |
| IC220 | F-27 | Q253 | L-3 | TP228 | I-30 | | |
| IC500 | E-23 | Q254 | K-31 | TP229 | G-28 | | |
| IC501 | C-22 | Q256 | K-4 | TP230 | M-26 | | |
| IC502 | J-15 | Q257 | H-6 | TP231 | L-21 | | |
| IC600 | B-19 | Q258 | G-6 | TP232 | C-32 | | |
| IC601 | H-20 | Q260 | B-1 | TP233 | C-31 | | |
| IC602 | E-20 | Q261 | B-1 | TP234 | C-31 | | |
| IC603 | F-20 | Q262 | B-2 | TP235 | L-25 | | |
| IC604 | D-14 | Q263 | H-10 | TP236 | M-30 | | |
| IC605 | E-18 | Q264 | I-10 | TP237 | I-32 | | |
| IC606 | H-18 | Q280 | C-31 | TP238 | E-25 | | |
| IC701 | K-5 | Q281 | D-2 | TP239 | J-31 | | |
| IC703 | L-30 | Q282 | D-2 | TP240 | K-27 | | |
| | | Q390 | J-14 | TP241 | E-26 | | |

# SP-2(SYSTEM CONTROL), LS-9(LOADING SWITCH), MS-4(

—Ref. No. SP-2 BOARD : 4,000 siries, LS-9 BOARD : 5,000 series, MS-4

| | |
|---|---|
| D025 | A-5 |
| D021 | A-28 |
| D060 | C-4 |
| D080 | K-15 |
| D081 | G-17 |
| D082 | G-16 |
| D106 | C-16 |
| D107 | B-16 |
| D108 | B-16 |
| D120 | C-16 |
| D203 | B-2 |
| D204 | F-26 |
| D205 | B-7 |
| D206 | D-7 |
| D208 | H-24 |
| D209 | I-26 |
| D211 | K-27 |
| D212 | L-3 |
| D213 | I-22 |
| D214 | J-30 |
| D215 | D-27 |
| D216 | C-6 |
| D217 | I-24 |
| D218 | K-30 |
| D220 | B-1 |
| D221 | B-1 |
| D222 | B-2 |
| D223 | G-6 |
| D225 | I-6 |
| D226 | K-30 |
| D227 | H-11 |
| D230 | D-31 |
| D231 | F-7 |
| D232 | K-7 |
| D233 | E-27 |
| D390 | F-27 |
| D391 | J-14 |
| D392 | I-10 |
| D393 | I-10 |
| D501 | F-11 |
| D502 | H-13 |
| D600 | B-13 |
| D601 | H-14 |
| D603 | I-14 |
| D604 | H-14 |
| D701 | K-5 |
| D702 | K-23 |
| IC001 | H-30 |
| IC002 | F-31 |
| IC003 | C-23 |
| IC004 | F-29 |
| IC005 | F-28 |
| IC007 | C-29 |
| IC008 | D-29 |
| IC009 | D-30 |
| IC010 | L-18 |
| IC011 | H-17 |
| IC012 | J-17 |
| IC120 | K-17 |
| IC121 | L-17 |
| IC201 | E-26 |
| IC202 | J-1 |
| IC204 | H-23 |
| IC205 | K-21 |
| IC206 | D-32 |
| IC207 | B-30 |
| IC208 | B-32 |
| IC209 | B-26 |
| IC210 | K-7 |
| IC211 | I-5 |
| IC212 | J-5 |
| IC213 | K-3 |
| IC214 | J-2 |
| IC215 | J-2 |
| IC216 | H-7 |
| IC217 | E-8 |
| IC218 | F-6 |
| IC219 | E-25 |
| IC220 | F-27 |
| IC500 | E-23 |
| IC501 | C-22 |
| IC502 | J-15 |
| IC600 | B-19 |
| IC601 | H-20 |
| IC602 | E-20 |
| IC603 | F-20 |
| IC604 | D-14 |
| IC605 | E-18 |
| IC606 | H-18 |
| IC701 | K-5 |
| IC703 | L-30 |

| | |
|---|---|
| Q010 | I-3 |
| Q011 | H-31 |
| Q012 | H-31 |
| Q013 | G-3 |
| Q014 | D-10 |
| Q015 | D-10 |
| Q020 | B-5 |
| Q021 | B-28 |
| Q022 | B-28 |
| Q023 | B-5 |
| Q054 | I-22 |
| Q055 | I-22 |
| Q060 | F-3 |
| Q070 | B-9 |
| Q071 | B-24 |
| Q080 | K-15 |
| Q081 | K-18 |
| Q082 | J-16 |
| Q083 | H-17 |
| Q084 | H-16 |
| Q085 | G-16 |
| Q086 | H-16 |
| Q087 | E-17 |
| Q088 | F-16 |
| Q090 | D-23 |
| Q091 | D-24 |
| Q103 | B-16 |
| Q120 | K-16 |
| Q121 | C-17 |
| Q122 | D-16 |
| Q123 | K-16 |
| Q201 | B-5 |
| Q202 | B-28 |
| Q203 | B-27 |
| Q204 | B-6 |
| Q205 | K-26 |
| Q206 | C-30 |
| Q207 | C-2 |
| Q208 | D-32 |
| Q209 | D-30 |
| Q210 | H-11 |
| Q211 | K-4 |
| Q212 | A-26 |
| Q213 | B-7 |
| Q214 | C-7 |
| Q215 | C-7 |
| Q216 | C-6 |
| Q217 | D-6 |
| Q218 | C-26 |
| Q219 | C-27 |
| Q220 | C-7 |
| Q221 | B-6 |
| Q222 | C-26 |
| Q223 | C-7 |
| Q224 | C-27 |
| Q225 | D-6 |
| Q226 | K-9 |
| Q227 | K-10 |
| Q228 | J-6 |
| Q229 | F-3 |
| Q230 | F-4 |
| Q232 | K-23 |
| Q233 | K-30 |
| Q235 | H-11 |
| Q236 | I-6 |
| Q237 | C-9 |
| Q238 | G-3 |
| Q239 | F-26 |
| Q240 | E-26 |
| Q242 | K-12 |
| Q243 | F-25 |
| Q244 | F-7 |
| Q245 | K-3 |
| Q246 | H-28 |
| Q248 | I-31 |
| Q249 | K-31 |
| Q250 | K-31 |
| Q251 | L-31 |
| Q252 | L-30 |
| Q253 | L-3 |
| Q254 | K-31 |
| Q256 | K-4 |
| Q257 | H-6 |
| Q258 | G-6 |
| Q260 | B-1 |
| Q261 | B-1 |
| Q262 | B-2 |
| Q263 | H-10 |
| Q264 | I-10 |
| Q280 | C-31 |
| Q281 | D-2 |
| Q282 | D-2 |
| Q390 | J-14 |

| | |
|---|---|
| Q401 | L-4 |
| Q500 | F-10 |
| Q501 | F-10 |
| Q502 | F-9 |
| Q601 | C-13 |
| Q602 | C-14 |
| Q604 | B-14 |
| Q605 | B-21 |
| Q606 | J-18 |
| Q701 | L-9 |
| Q702 | L-9 |
| Q703 | L-9 |
| Q704 | M-24 |
| Q705 | K-23 |
| Q706 | K-24 |
| Q707 | L-9 |
| Q708 | L-10 |
| Q709 | L-25 |
| Q710 | M-21 |
| Q711 | L-10 |
| Q712 | K-11 |
| Q713 | L-10 |
| Q714 | L-23 |
| Q715 | L-22 |
| Q716 | M-10 |
| Q717 | K-10 |
| RV201 | J-26 |
| RV202 | J-26 |
| RV203 | J-26 |
| RV204 | J-26 |
| RV205 | L-32 |
| RV206 | K-31 |
| RV207 | L-31 |
| RV208 | L-32 |
| RV209 | D-25 |
| RV210 | M-29 |
| RV212 | G-25 |
| RV215 | K-25 |
| RV216 | K-25 |
| RV217 | G-27 |
| RV218 | G-26 |
| RV601 | B-20 |
| RV602 | F-18 |
| RV603 | C-21 |
| RV604 | B-21 |
| RV701 | M-27 |
| TP001 | G-29 |
| TP002 | I-30 |
| TP003 | E-32 |
| TP004 | G-29 |
| TP005 | G-29 |
| TP201 | I-23 |
| TP202 | G-24 |
| TP203 | G-22 |
| TP204 | G-22 |
| TP205 | G-22 |
| TP206 | J-21 |
| TP207 | G-24 |
| TP208 | K-29 |
| TP209 | L-22 |
| TP210 | B-27 |
| TP211 | B-27 |
| TP212 | J-27 |
| TP213 | K-28 |
| TP214 | K-25 |
| TP215 | J-24 |
| TP216 | K-26 |
| TP217 | K-26 |
| TP219 | M-26 |
| TP220 | I-30 |
| TP221 | L-27 |
| TP222 | J-29 |
| TP223 | L-26 |
| TP224 | J-23 |
| TP225 | E-27 |
| TP226 | G-24 |
| TP227 | L-27 |
| TP228 | I-30 |
| TP229 | G-28 |
| TP230 | M-26 |
| TP231 | L-21 |
| TP232 | C-32 |
| TP233 | C-31 |
| TP234 | C-31 |
| TP235 | L-25 |
| TP236 | M-30 |
| TP237 | I-32 |
| TP238 | E-25 |
| TP239 | J-31 |
| TP240 | K-27 |
| TP241 | E-26 |

| | |
|---|---|
| TP242 | E-26 |
| TP603 | G-20 |
| TP604 | D-18 |
| TP607 | G-22 |
| TP608 | C-21 |
| TP609 | E-18 |

**SP-2**BOARD(SOLDER SIDE)

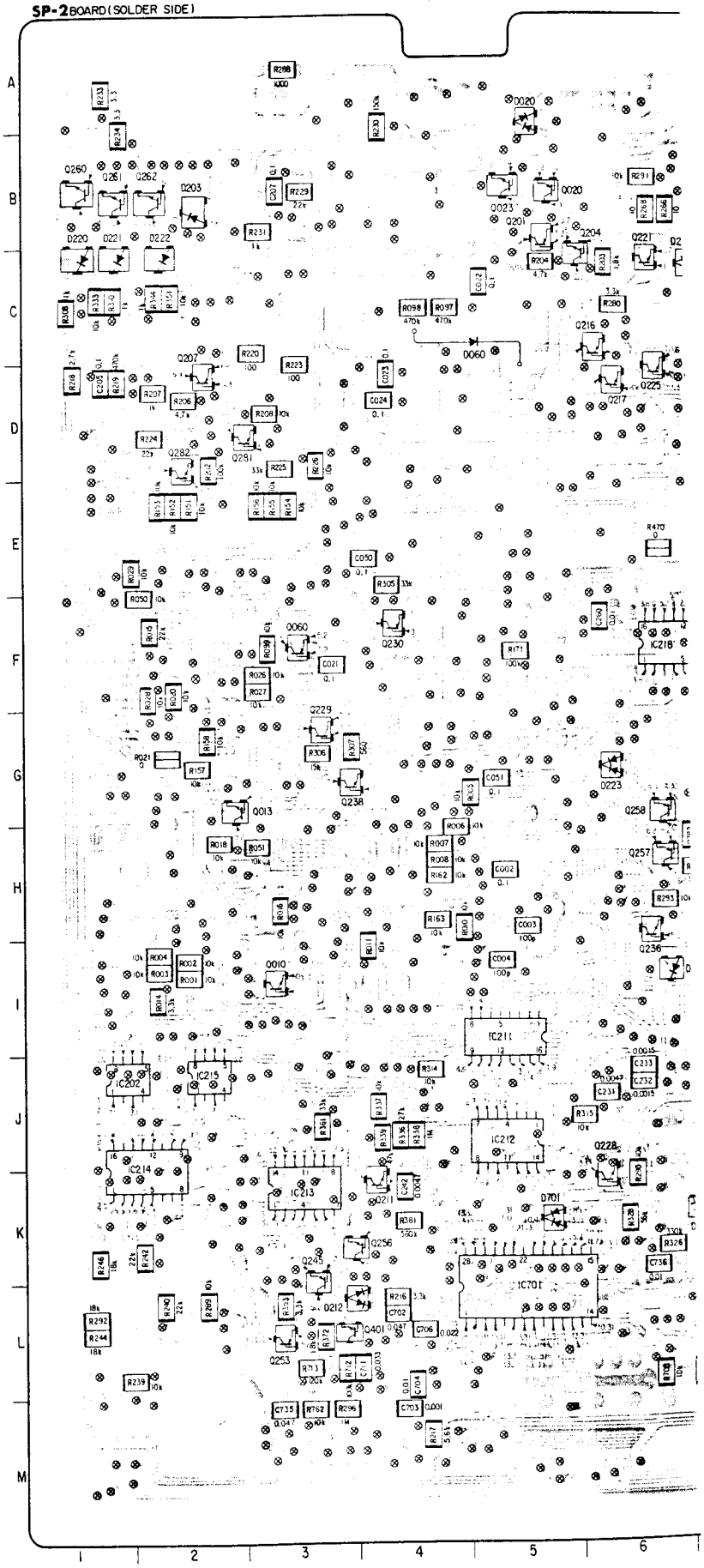

LDER SIDE)

SP-2 BOARD (COMPONENT SIDE)

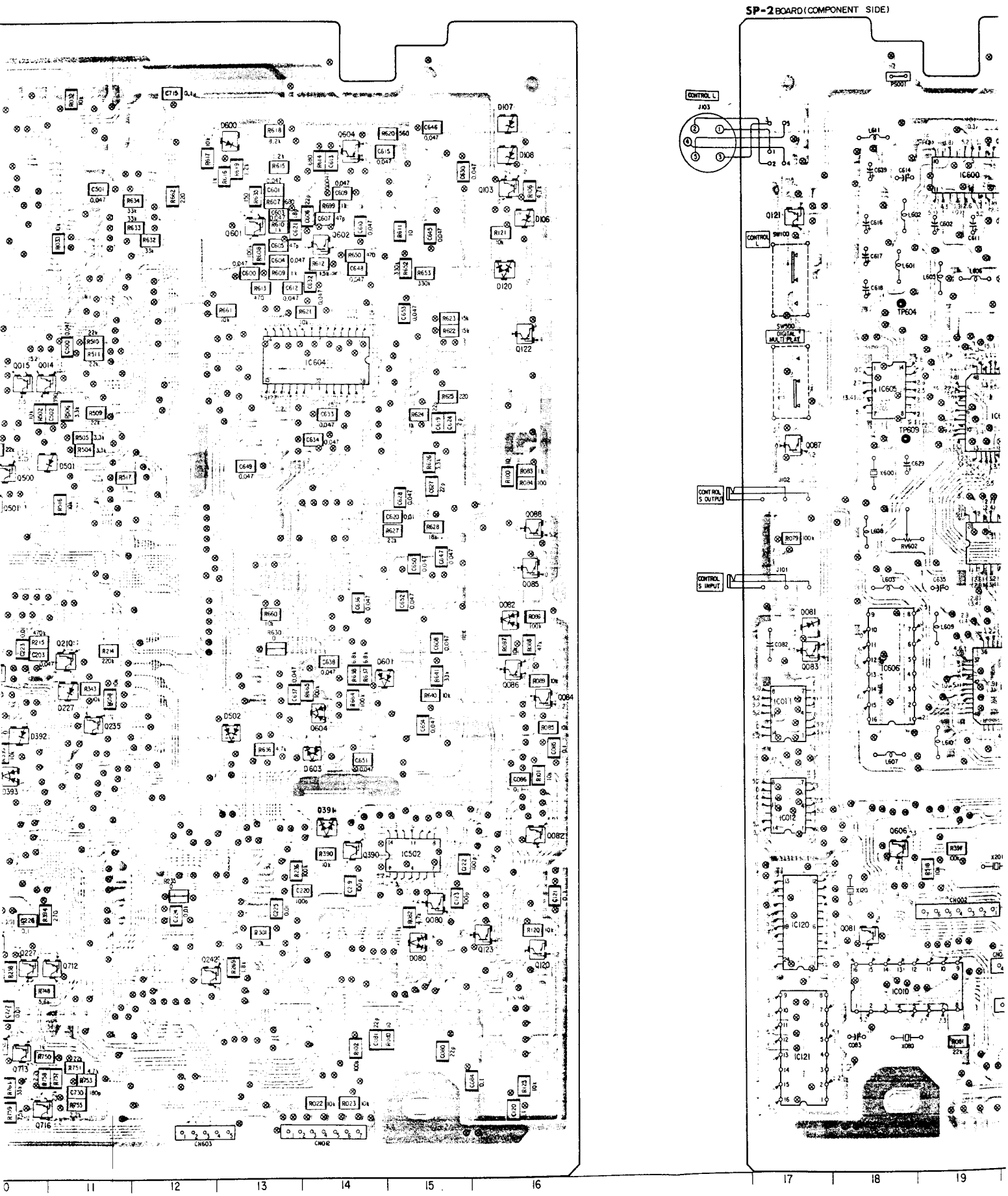

SP-2 BOARD (COMPONENT SIDE)

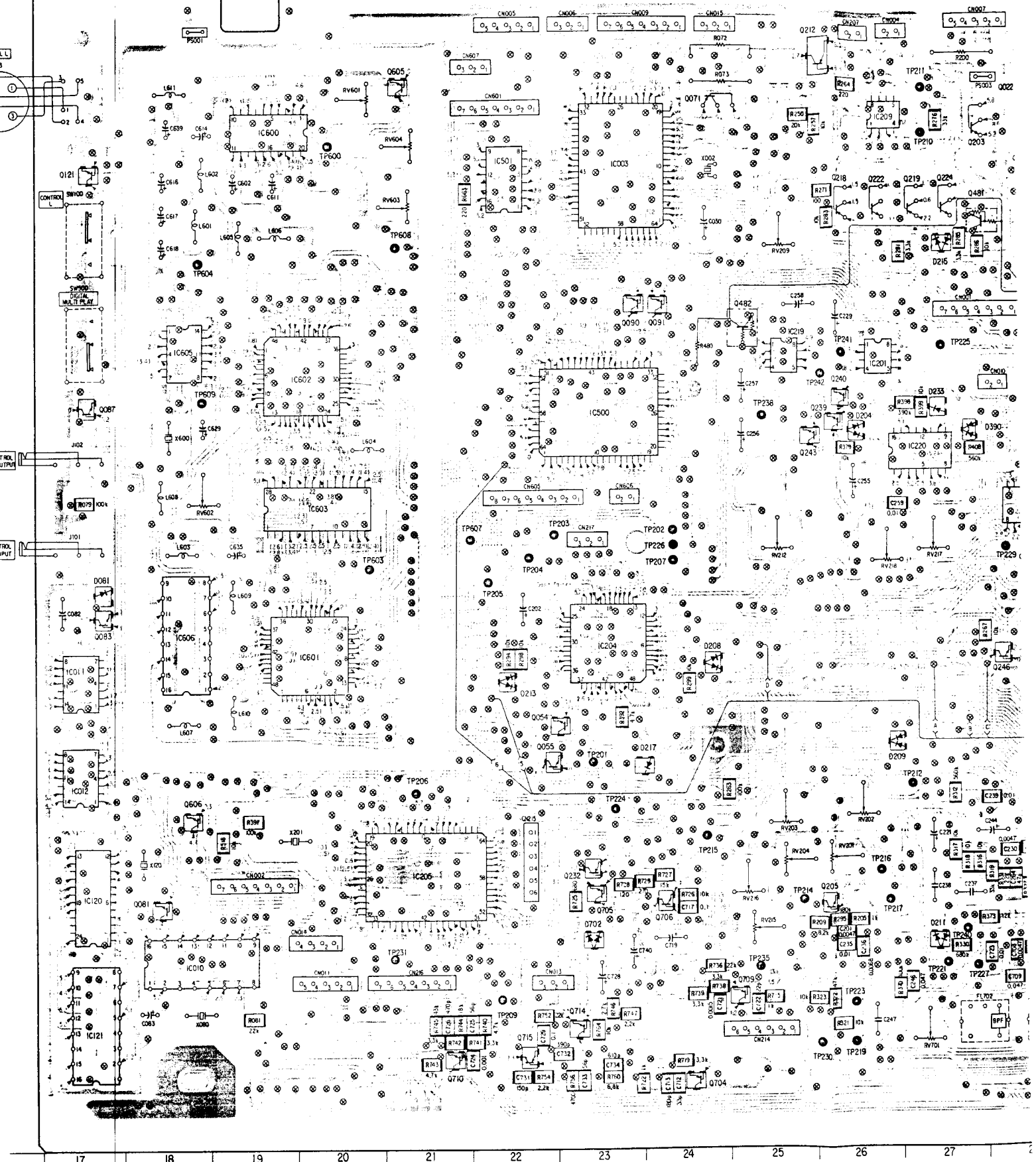

17 18 19 20 21 22 23 24 25 26 27

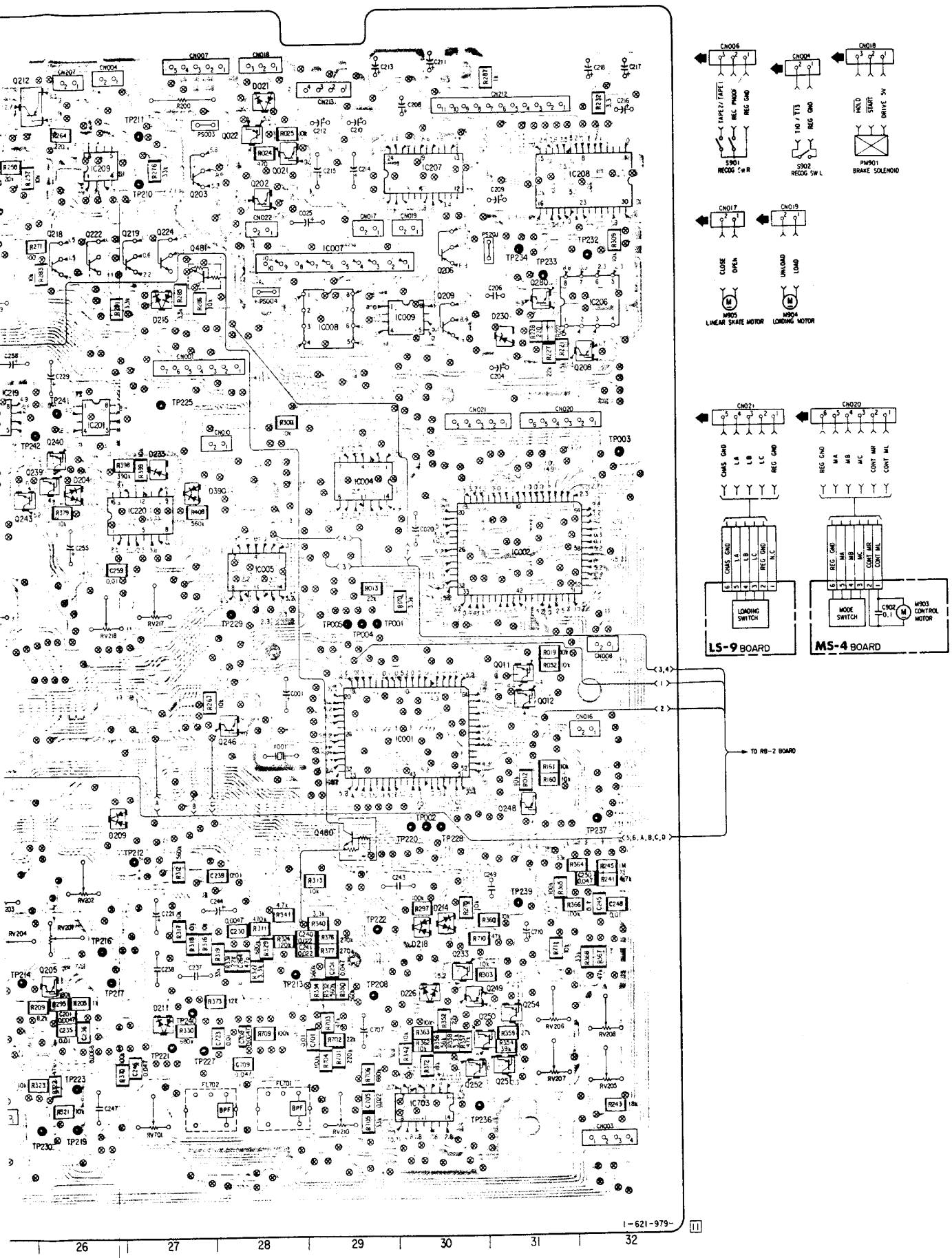




# L SYSTEM CONTROL

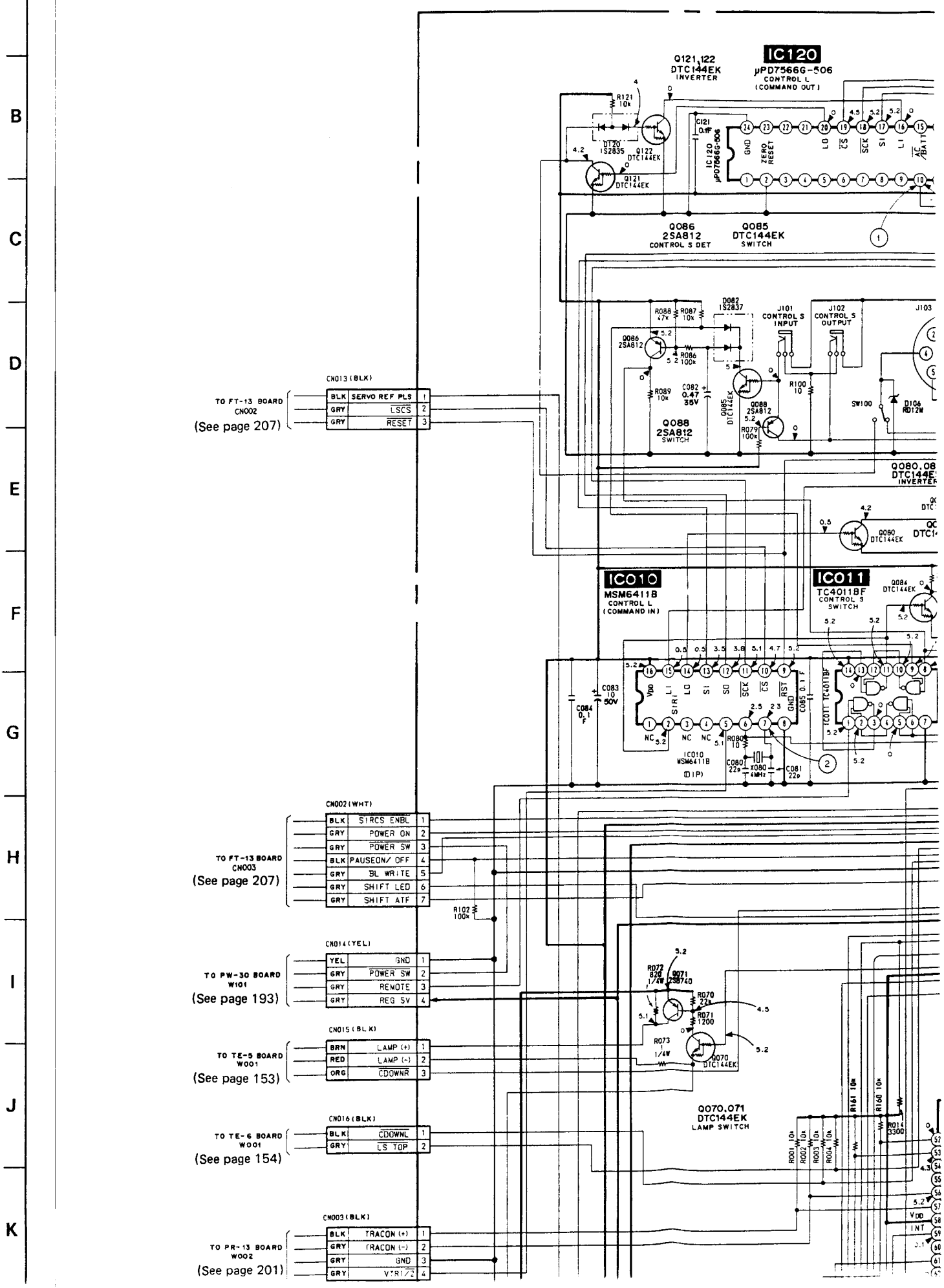
1
2
3
4
5
6
7
8
A
B
C
D
E
F
G
H
I
J
K
IC120
μPD7566G-506
CONTROL L
(COMMAND OUT)
Q121,122
DTC144EK
INVERTER
Q086
2SA812
CONTROL S DET
Q085
DTC144EK
SWITCH
Q088
2SA812
SWITCH
J101
CONTROL S
INPUT
J102
CONTROL S
OUTPUT
IC010
MSM6411B
CONTROL L
(COMMAND IN)
IC011
TC4011BF
CONTROL S
SWITCH
Q070,071
DTC144EK
LAMP SWITCH
CN013 (BLK)
BLK SERVO REF PLS 1
GRY LSCS 2
GRY RESET 3
TO FT-13 BOARD
CN002
(See page 207)
CN002 (WHT)
BLK STRCS ENBL 1
GRY POWER ON 2
GRY POWER SW 3
BLK PAUSE ON/ OFF 4
GRY BL WRITE 5
GRY SHIFT LED 6
GRY SHIFT ATF 7
TO FT-13 BOARD
CN003
(See page 207)
CN014 (YEL)
YEL GND 1
GRY POWER SW 2
GRY REMOTE 3
GRY REG 5V 4
TO PW-30 BOARD
W101
(See page 193)
CN015 (BLK)
BRN LAMP (+) 1
RED LAMP (-) 2
ORG CDOWNR 3
TO TE-5 BOARD
W001
(See page 153)
CN016 (BLK)
BLK CDOWNL 1
GRY LS TOP 2
TO TE-6 BOARD
W001
(See page 154)
CN003 (BLK)
BLK TRACON (+) 1
GRY TRACON (-) 2
GRY GND 3
GRY VTR1/2 4
TO PR-13 BOARD
W002
(See page 201)

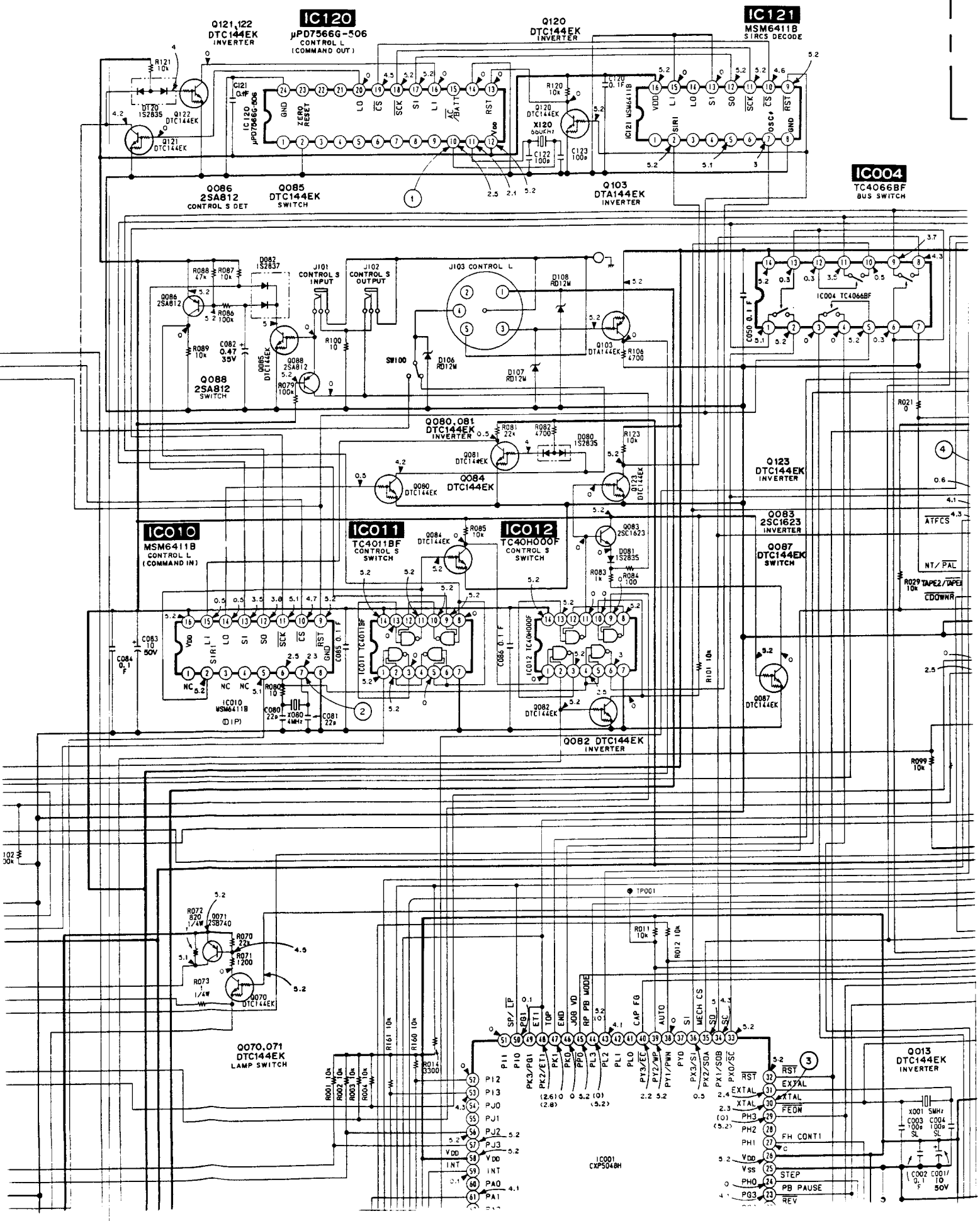
IC120
μPD7566G-506
CONTROL L
(COMMAND OUT)
Q121,122
DTC144EK
INVERTER
Q120
DTC144EK
INVERTER
IC121
MSM6411B
SIRCS DECODE
Q086
2SA812
CONTROL S DET
Q085
DTC144EK
SWITCH
Q103
DTA144EK
INVERTER
IC004
TC4066BF
BUS SWITCH
J101
CONTROL S
INPUT
J102
CONTROL S
OUTPUT
J103 CONTROL L
Q088
2SA812
SWITCH
Q080,081
DTC144EK
INVERTER
Q084
DTC144EK
Q123
DTC144EK
INVERTER
IC010
MSM6411B
CONTROL L
(COMMAND IN)
IC011
TC4011BF
CONTROL S
SWITCH
IC012
TC40H000F
CONTROL S
SWITCH
Q083
2SC1623
INVERTER
Q087
DTC144EK
SWITCH
Q082 DTC144EK
INVERTER
Q070,071
DTC144EK
LAMP SWITCH
Q013
DTC144EK
INVERTER
IC001
CXP5048H
TP001
ATFCS
NT/PAL
TAPE2/TAPE1
CDOWNR
STEP
PB PAUSE
REV
FH CONT1

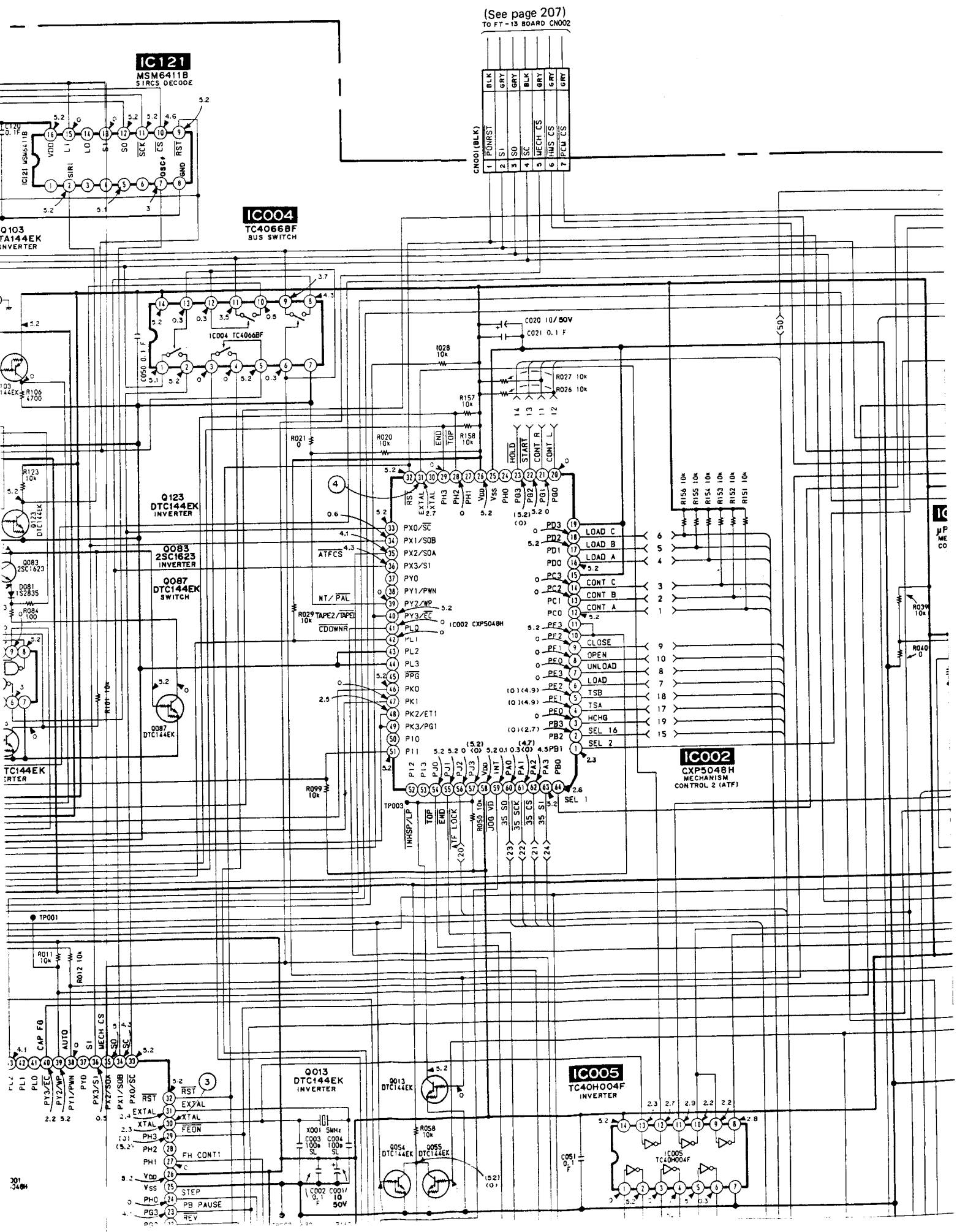
(See page 207)
TO FT-13 BOARD CN002
CN001 (BLK)
PONRST
S1
SO
SC
MECH CS
HWS CS
PCM CS
IC121
MSM6411B
SIRCS DECODE
IC004
TC40668F
BUS SWITCH
IC004 TC4066BF
Q103
DTA144EK
INVERTER
Q123
DTC144EK
INVERTER
Q083
2SC1623
INVERTER
Q087
DTC144EK
SWITCH
IC002
CXP5048H
MECHANISM
CONTROL 2 (ATF)
LOAD C
LOAD B
LOAD A
CONT C
CONT B
CONT A
CLOSE
OPEN
UNLOAD
LOAD
TSB
TSA
HCHG
SEL 16
SEL 2
SEL 1
Q013
DTC144EK
INVERTER
IC005
TC40H004F
INVERTER
X001 5MHz
FH CONT1
STEP
PB PAUSE
REV

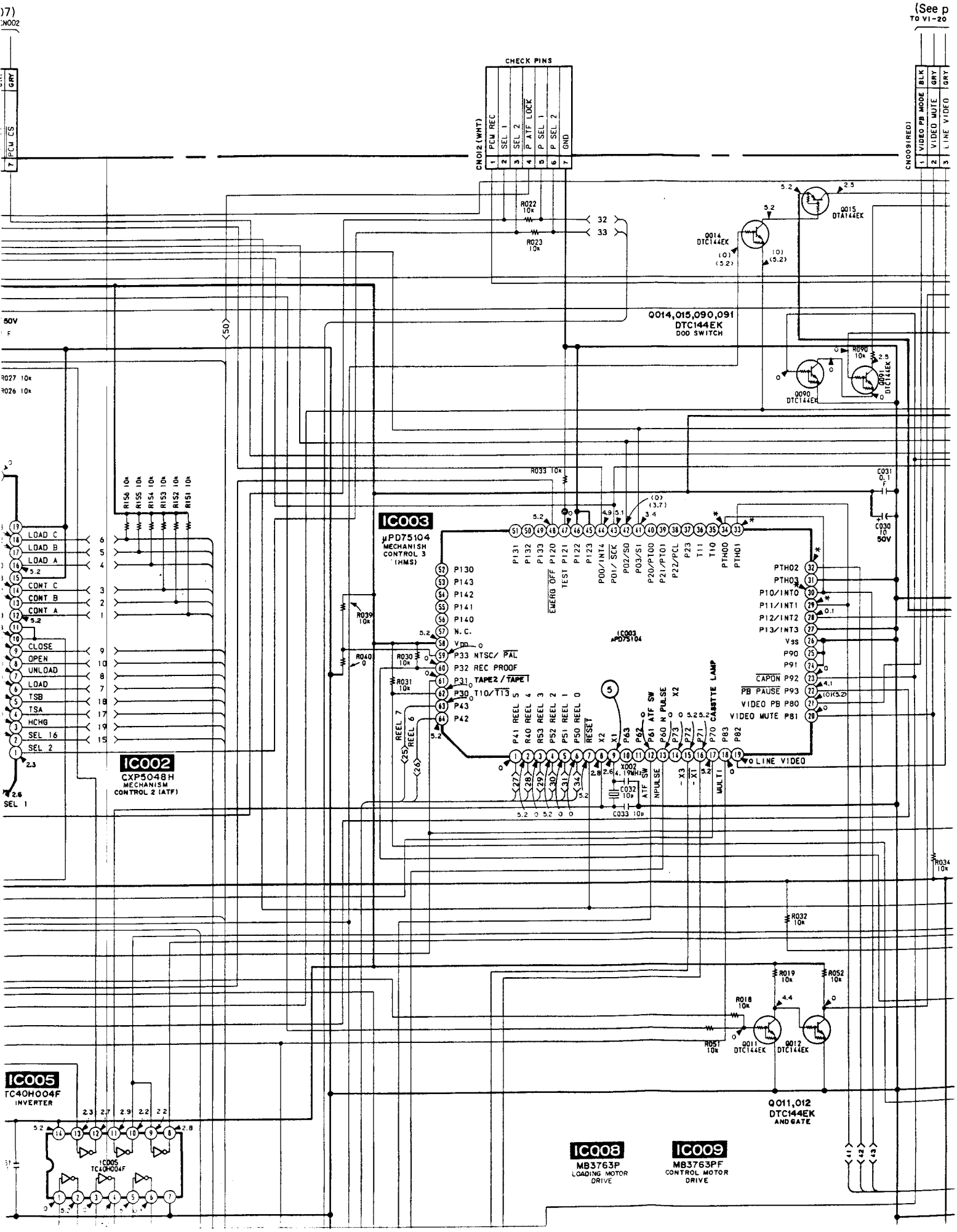
CHECK PINS
CN012 (WHT)
PCM REC
SEL 1
SEL 2
P ATF LOCK
P SEL 1
P SEL 2
GND
CN009(RED)
VIDEO PB MODE
VIDEO MUTE
LINE VIDEO
(See p
TO V1-20
IC003
μPD75104
MECHANISM CONTROL 3 (HMS)
IC002
CXP5048H
MECHANISM CONTROL 2 (ATF)
IC005
TC40H004F
INVERTER
IC008
MB3763P
LOADING MOTOR DRIVE
IC009
MB3763PF
CONTROL MOTOR DRIVE
Q014,015,090,091
DTC144EK
DOO SWITCH
Q011,012
DTC144EK
AND GATE
LOAD C
LOAD B
LOAD A
CONT C
CONT B
CONT A
CLOSE
OPEN
UNLOAD
LOAD
TSB
TSA
HCHG
SEL 16
SEL 2
SEL 1
LINE VIDEO

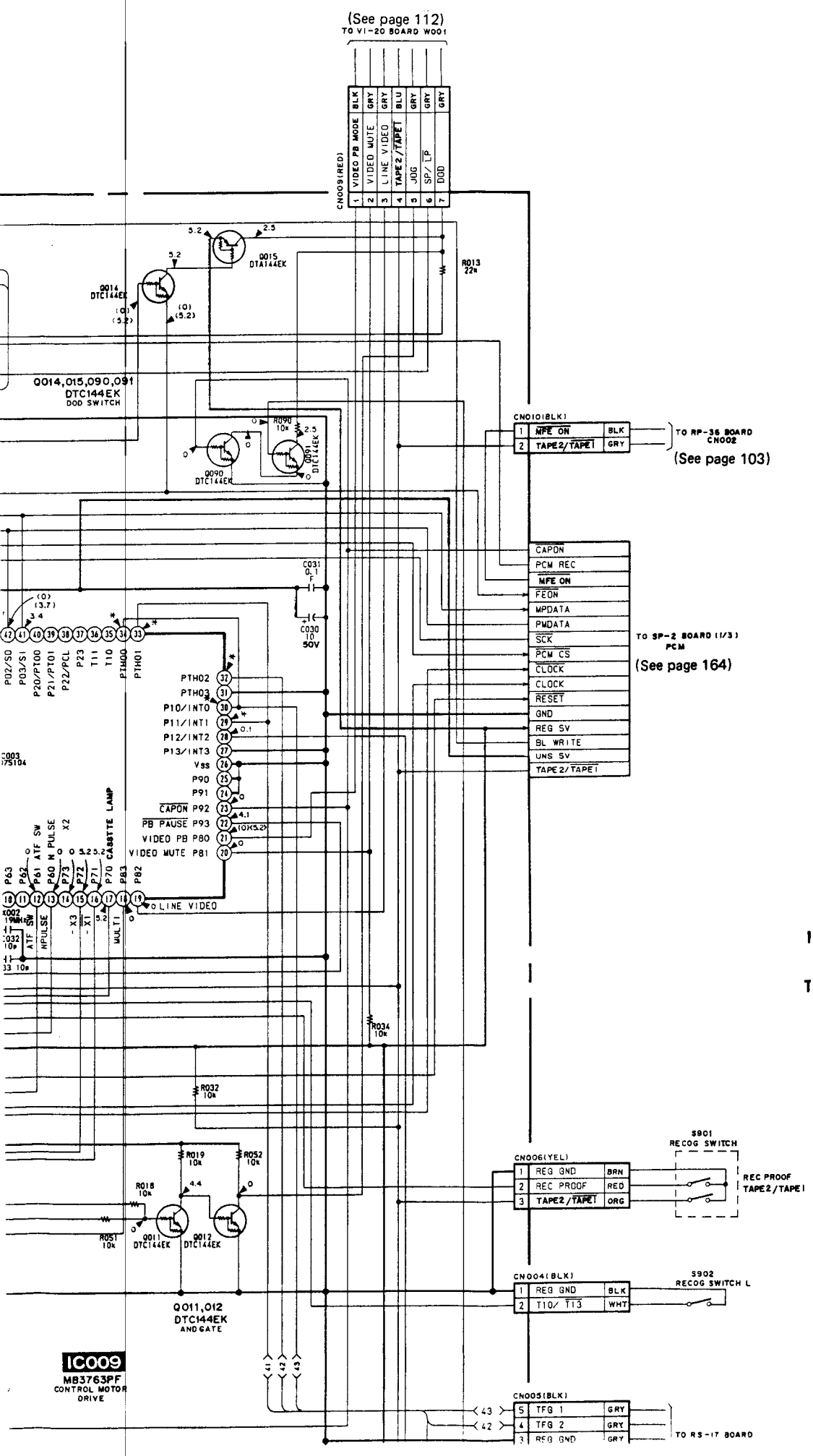
(See page 112)
TO VI-20 BOARD W001
CN009(RED)
1 VIDEO PB MODE BLK
2 VIDEO MUTE GRY
3 LINE VIDEO GRY
4 TAPE2/TAPE1 BLU
5 JOG GRY
6 SP/LP GRY
7 DOD GRY
Q015 DTA144EK
Q014 DTC144EK
R013 22k
Q014,015,090,091 DTC144EK DOD SWITCH
R090 10k
Q090 DTC144EK
Q091 DTC144EK
CN010(BLK)
1 NFE ON BLK
2 TAPE2/TAPE1 GRY
TO RP-36 BOARD CN002
(See page 103)
C031 0.1 F
C030 10 50V
CAPON
PCM REC
NFE ON
FEON
MPDATA
PWDATA
SCK
PCM CS
CLOCK
CLOCK
RESET
GND
REG 5V
BL WRITE
UNS 5V
TAPE2/TAPE1
TO SP-2 BOARD (1/3) PCM
(See page 164)
PTH02
PTH03
P10/INT0
P11/INT1
P12/INT2
P13/INT3
Vss
P90
P91
CAPON P92
PB PAUSE P93
VIDEO PB P80
VIDEO MUTE P81
LINE VIDEO
CASSTTE LAMP
ATF SW
X2
X3
X1
MULTI
R034 10k
R032 10k
R019 10k
R052 10k
R018 10k
R051 10k
Q011 DTC144EK
Q012 DTC144EK
Q011,012 DTC144EK AND GATE
S901 RECOG SWITCH
CN006(YEL)
1 REG GND BRN
2 REC PROOF RED
3 TAPE2/TAPE1 ORG
REC PROOF TAPE2/TAPE1
S902 RECOG SWITCH L
CN004(BLK)
1 REG GND BLK
2 T10/T13 WHT
IC009
MB3763PF
CONTROL MOTOR DRIVE
CN005(BLK)
5 TFG 1 GRY
4 TFG 2 GRY
3 REG GND GRY
TO RS-17 BOARD

A B C D E F G H I J K

**Note:**

- Caution when replacing chip parts.
  New parts must be attached after removal of chip.
  Be careful not to heat the minus side of tantalum capacitor, because it is damaged by the heat.
- All resistors are in ohms, 1/10W unless otherwise noted.
  kΩ: 1000Ω, MΩ: 1000kΩ.
- All capacitors are in μF unless otherwise noted. pF : μμF.
  50V or less are not indicated except for electrolytice. and tantalums.
- All variable and adjustable resistors have characteristic curve B, unless otherwise noted.
- ▭ : panel designation.
- △ : internal component.
- ▭ : adjustment for repair.
- ▬ : B + bus.
- Voltages are dc with respect to ground unless otherwise noted.
- Readings are taken with a colour-bar signal input.
- Readings are taken with a digital multimeter (DC10MΩ).
- Voltage variations may be noted due to normal production tolerances.

**Note: The components identified by shading and mark ⚠ are critical for safety. Replace only with part number specified.**

When indicating parts by reference number, please include the board name.

**SP-2** BOARD (SYSCON)

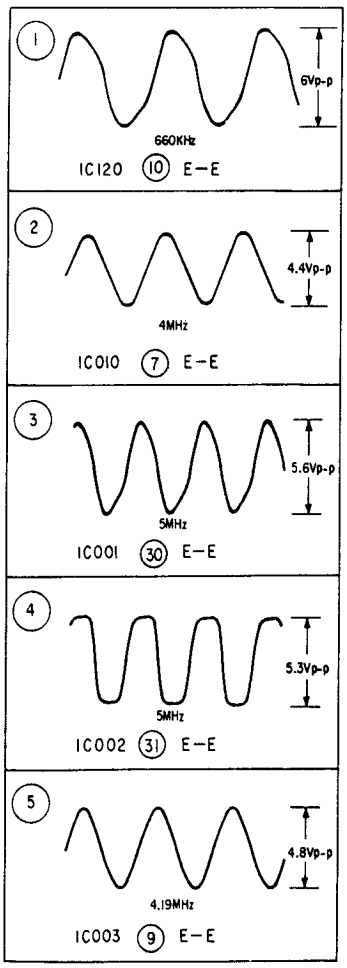

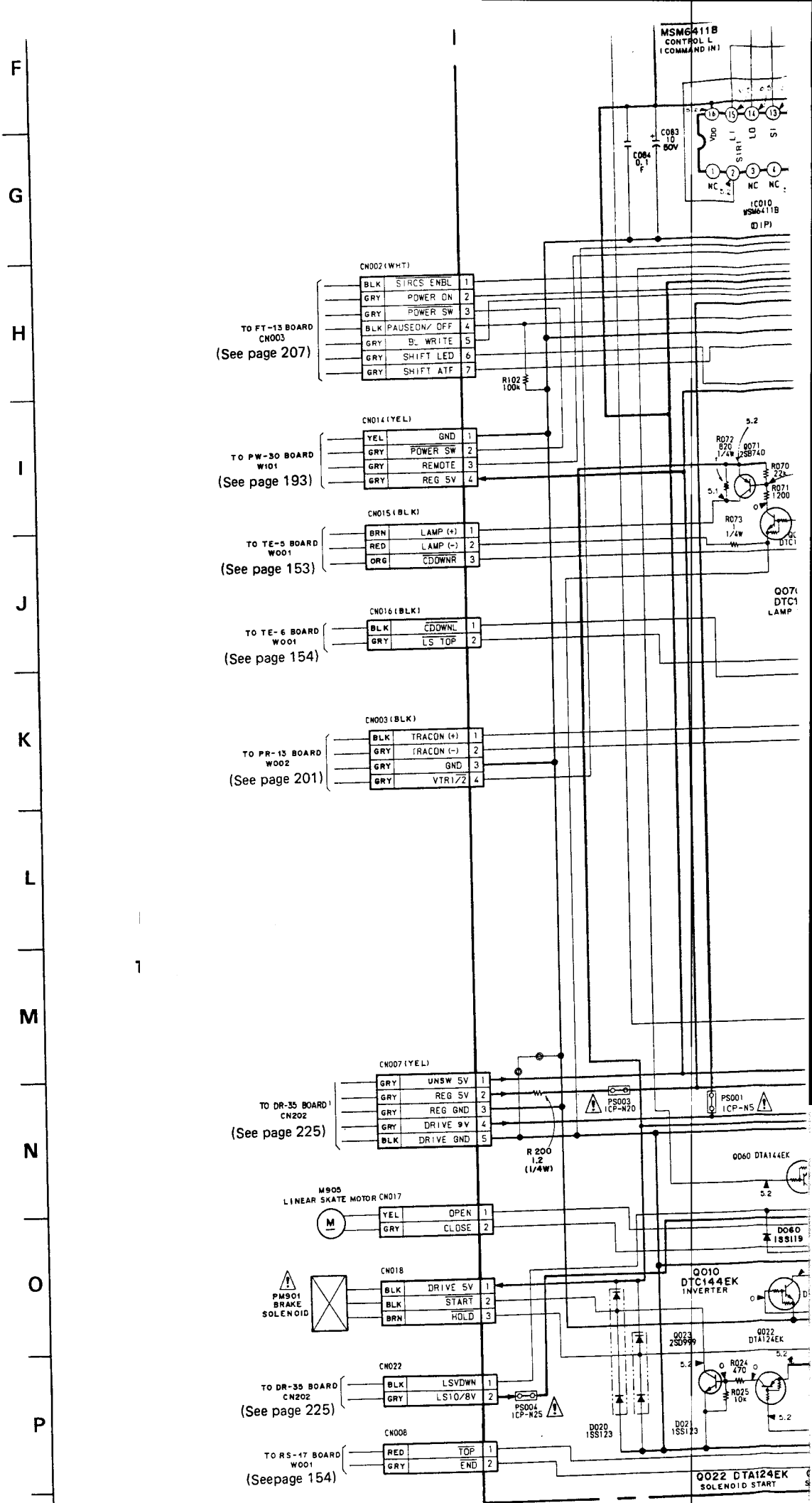
MSM6411B
CONTROL L
(COMMAND IN)
IC010
MSM6411B
(DIP)
C083
10
50V
C084
0.1
F
CN002 (WHT)
BLK STRCS ENBL 1
GRY POWER ON 2
GRY POWER SW 3
BLK PAUSEON/ OFF 4
GRY BL WRITE 5
GRY SHIFT LED 6
GRY SHIFT ATF 7
TO FT-13 BOARD CN003
(See page 207)
R102 100k
CN014 (YEL)
YEL GND 1
GRY POWER SW 2
GRY REMOTE 3
GRY REG 5V 4
TO PW-30 BOARD W101
(See page 193)
R072 820 1/4W
Q071 2SB740
R070 22k
R071 1200
R073 1 1/4W
DTC1
CN015 (BLK)
BRN LAMP (+) 1
RED LAMP (-) 2
ORG CDOWNR 3
TO TE-5 BOARD W001
(See page 153)
CN016 (BLK)
BLK CDOWNL 1
GRY LS TOP 2
TO TE-6 BOARD W001
(See page 154)
CN003 (BLK)
BLK TRACON (+) 1
GRY TRACON (-) 2
GRY GND 3
GRY VTR1/2 4
TO PR-13 BOARD W002
(See page 201)
CN007 (YEL)
GRY UNSW 5V 1
GRY REG 5V 2
GRY REG GND 3
GRY DRIVE 9V 4
BLK DRIVE GND 5
TO DR-35 BOARD CN202
(See page 225)
PS003 ICP-N20
PS001 ICP-N5
R 200 1.2 (1/4W)
QD60 DTA144EK
M905 LINEAR SKATE MOTOR CN017
YEL OPEN 1
GRY CLOSE 2
DO60 1SS119
PM901 BRAKE SOLENOID
CN018
BLK DRIVE 5V 1
BLK START 2
BRN HOLD 3
Q010 DTC144EK INVERTER
Q023 2SD999
Q022 DTA124EK
R024 470
R025 10k
CN022
BLK LSVDWN 1
GRY LS10/8V 2
TO DR-35 BOARD CN202
(See page 225)
PS004 ICP-N25
DO20 1SS123
DO21 1SS123
CN008
RED TOP 1
GRY END 2
TO RS-17 BOARD W001
(Seepage 154)
Q022 DTA124EK
SOLENOID START

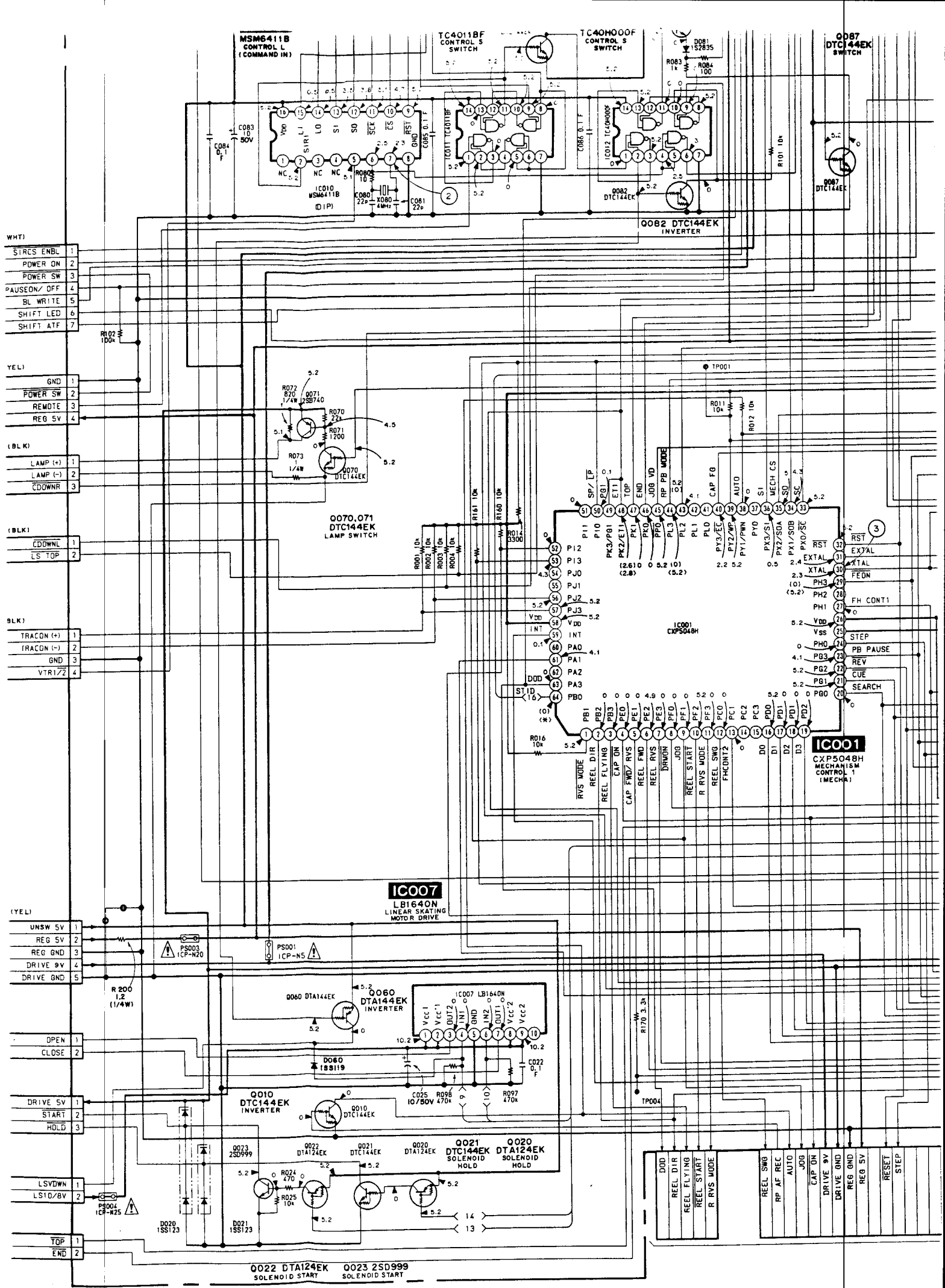
MSM6411B
CONTROL L
(COMMAND IN)
TC4011BF
CONTROL S
SWITCH
TC40H000F
CONTROL S
SWITCH
Q087
DTC144EK
SWITCH
IC010
MSM6411B
(DIP)
Q082 DTC144EK
INVERTER
Q070,071
DTC144EK
LAMP SWITCH
IC001
CXP5048H
MECHANISM
CONTROL 1
(MECHA)
IC007
LB1640N
LINEAR SKATING
MOTOR DRIVE
Q060
DTA144EK
INVERTER
Q010
DTC144EK
INVERTER
Q021
DTC144EK
SOLENOID
HOLD
Q020
DTA124EK
SOLENOID
HOLD
Q022 DTA124EK
SOLENOID START
Q023 2SD999
SOLENOID START
WHT)
STRCS ENBL 1
POWER ON 2
POWER SW 3
PAUSEON/ OFF 4
BL WRITE 5
SHIFT LED 6
SHIFT ATF 7
YEL)
GND 1
POWER SW 2
REMOTE 3
REG 5V 4
(BLK)
LAMP (+) 1
LAMP (-) 2
CDOWNR 3
(BLK)
CDOWNL 1
LS TOP 2
BLK)
TRACON (+) 1
TRACON (-) 2
GND 3
VTR1/2 4
(YEL)
UNSW 5V 1
REG 5V 2
REG GND 3
DRIVE 9V 4
DRIVE GND 5
OPEN 1
CLOSE 2
DRIVE 5V 1
START 2
HOLD 3
LSVDWN 1
LS10/8V 2
TOP 1
END 2
DOD
REEL DIR
REEL FLYING
REEL START
R RVS MODE
REEL SWG
RP AF REC
AUTO
JOG
CAP ON
DRIVE 9V
DRIVE GND
REG GND
REG 5V
RESET
STEP

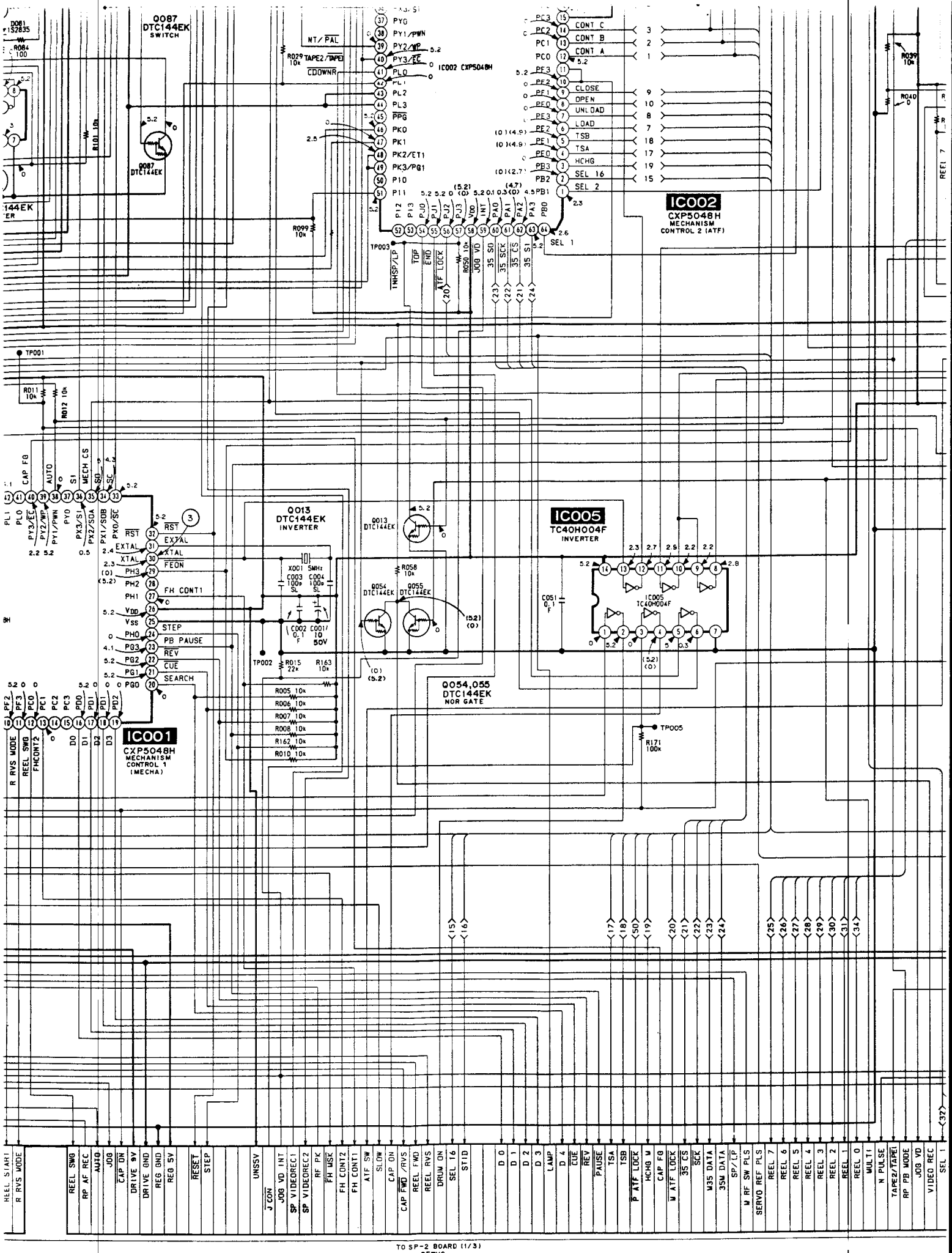


(See pages 144—146)

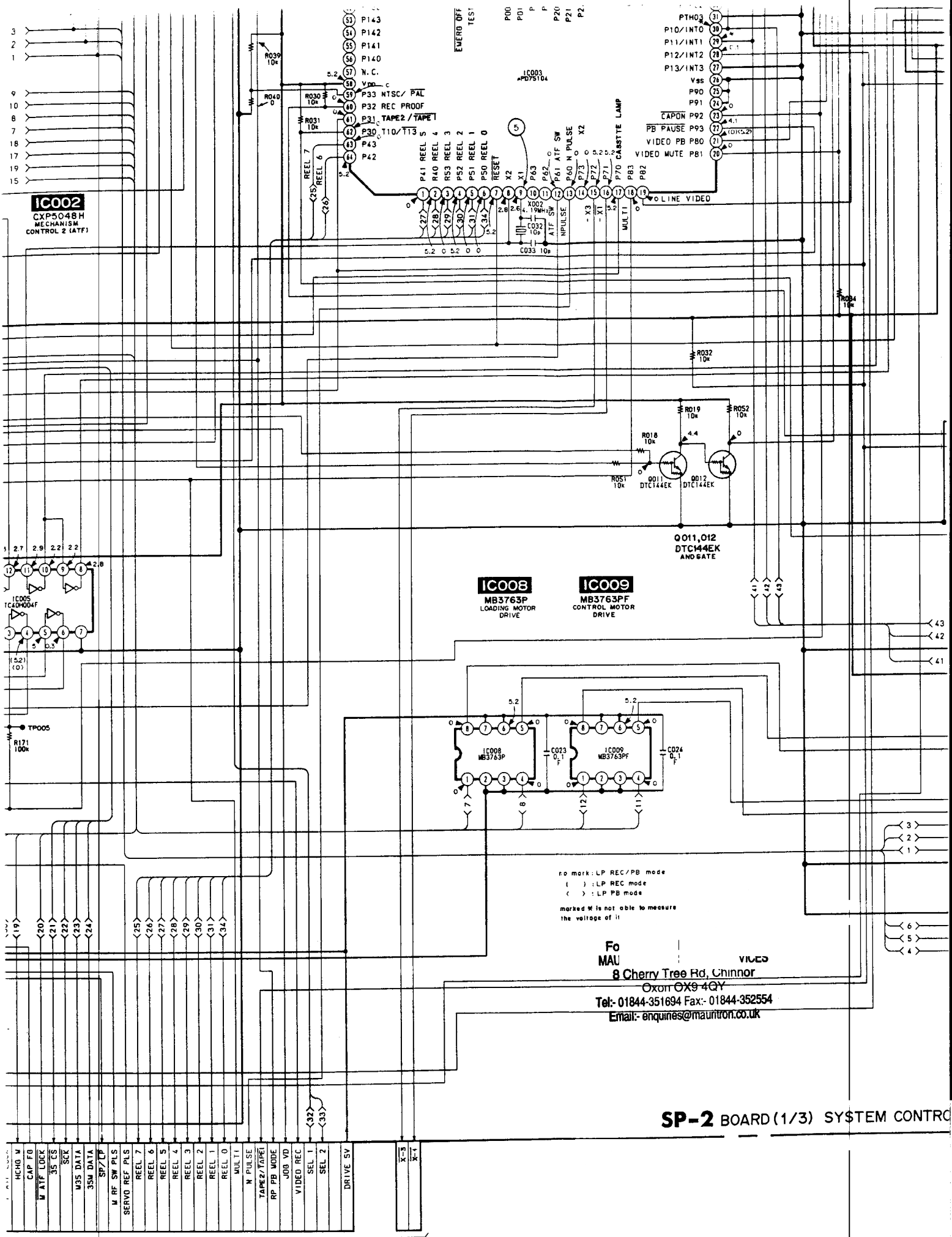


Fo
MAU VICES
8 Cherry Tree Rd, Chinnor
Oxon OX9 4QY
Tel:- 01844-351694 Fax:- 01844-352554
Email:- enquines@maunitron.co.uk

**SP-2** BOARD (1/3) SYSTEM CONTRO

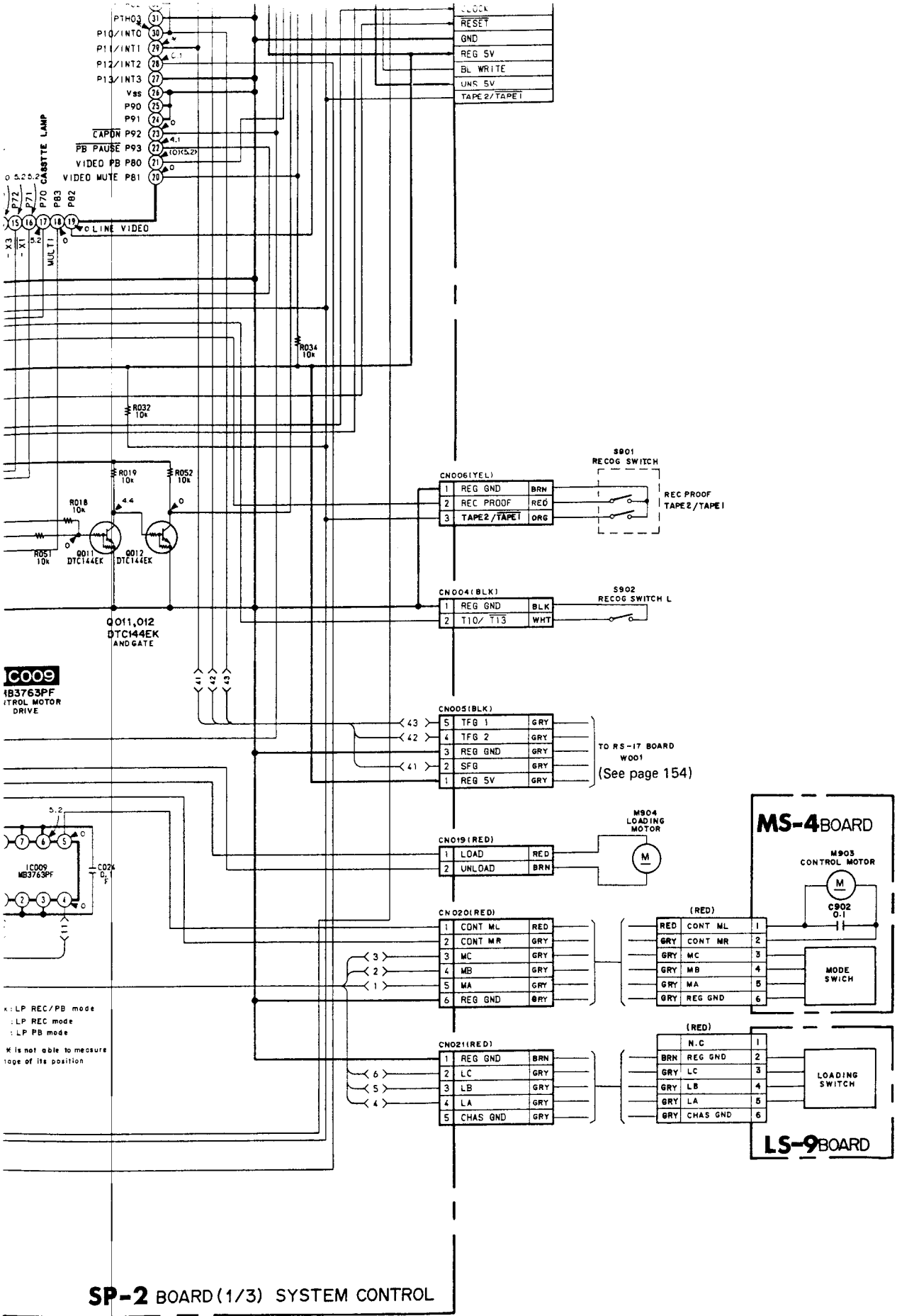


**SP-2** BOARD (1/3) SYSTEM CONTROL

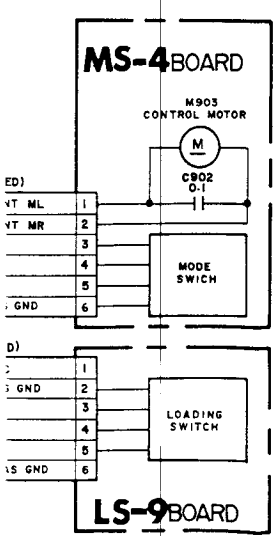


F

G

H

I

J

K

L

M

N

O

P

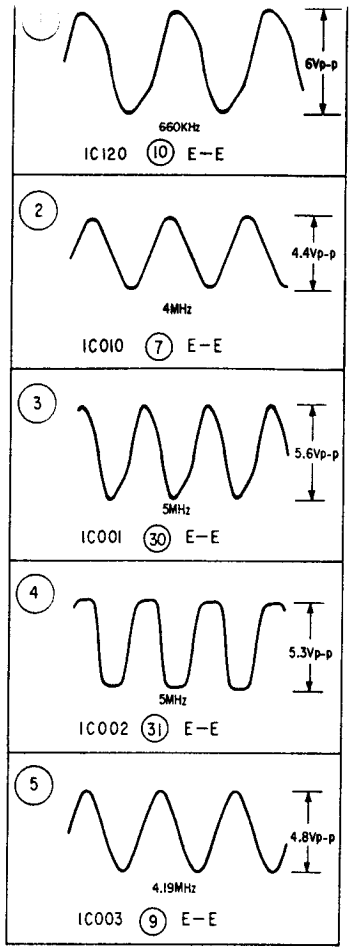

Note:

- ○— : indicates a lead wire mounted on the component side.
- ●— : indicates a lead wire mounted on the printed side.
- ⊗ : Through hole.
- : Pattern from the side which enables seeing.
- : Pattern of the rear side.
- : B+ pattern from the side which enables seeing.

Caution:

Pattern face side: (Solder Side) Parts on the pattern face side seen from the pattern face are indicated.

Parts face side: (Component Side) Parts on the parts face side seen from the parts face are indicated.

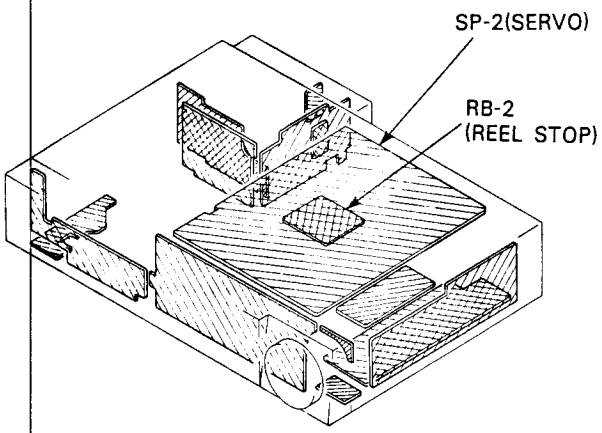


| | | | | | | | |
|---|---|---|---|---|---|---|---|
| D025 | A-5 | Q010 | I-3 | Q401 | L-4 | TP242 | E-26 |
| D021 | A-28 | Q011 | H-31 | Q500 | F-10 | TP603 | G-20 |
| D060 | C-4 | Q012 | H-31 | Q501 | F-10 | TP604 | D-18 |
| D080 | K-15 | Q013 | G-3 | Q502 | F-9 | TP607 | G-22 |
| D081 | G-17 | Q014 | D-10 | Q601 | C-13 | TP608 | C-21 |
| D082 | G-16 | Q015 | D-10 | Q602 | C-14 | TP609 | E-18 |
| D106 | C-16 | Q020 | B-5 | Q604 | B-14 | | |
| D107 | B-16 | Q021 | B-28 | Q605 | B-21 | | |
| D108 | B-16 | Q022 | B-28 | Q606 | J-18 | | |
| D120 | C-16 | Q023 | B-5 | Q701 | L-9 | | |
| D203 | B-2 | Q054 | I-22 | Q702 | L-9 | | |
| D204 | F-26 | Q055 | I-22 | Q703 | L-9 | | |
| D205 | B-7 | Q060 | F-3 | Q704 | M-24 | | |
| D206 | D-7 | Q070 | B-9 | Q705 | K-23 | | |
| D208 | H-24 | Q071 | B-24 | Q706 | K-24 | | |
| D209 | I-26 | Q080 | K-15 | Q707 | L-9 | | |
| D211 | K-27 | Q081 | K-18 | Q708 | L-10 | | |
| D212 | L-3 | Q082 | J-16 | Q709 | L-25 | | |
| D213 | I-22 | Q083 | H-17 | Q710 | M-21 | | |
| D214 | J-30 | Q084 | H-16 | Q711 | L-10 | | |
| D215 | D-27 | Q085 | G-16 | Q712 | K-11 | | |
| D216 | C-6 | Q086 | H-16 | Q713 | L-10 | | |
| D217 | I-24 | Q087 | E-17 | Q714 | L-23 | | |
| D218 | K-30 | Q088 | F-16 | Q715 | L-22 | | |
| D220 | B-1 | Q090 | D-23 | Q716 | M-10 | | |
| D221 | B-1 | Q091 | D-24 | Q717 | K-10 | | |
| D222 | B-2 | Q103 | B-16 | | | | |
| D223 | G-6 | Q120 | K-16 | RV201 | J-26 | | |
| D225 | I-6 | Q121 | C-17 | RV202 | J-26 | | |
| D226 | K-30 | Q122 | D-16 | RV203 | J-26 | | |
| D227 | H-11 | Q123 | K-16 | RV204 | J-26 | | |
| D230 | D-31 | Q201 | B-5 | RV205 | L-32 | | |
| D231 | F-7 | Q202 | B-28 | RV206 | K-31 | | |
| D232 | K-7 | Q203 | B-27 | RV207 | L-31 | | |
| D233 | E-27 | Q204 | B-6 | RV208 | L-32 | | |
| D390 | F-27 | Q205 | K-26 | RV209 | D-25 | | |
| D391 | J-14 | Q206 | C-30 | RV210 | M-29 | | |
| D392 | I-10 | Q207 | C-2 | RV212 | G-25 | | |
| D393 | I-10 | Q208 | D-32 | RV215 | K-25 | | |
| D501 | F-11 | Q209 | D-30 | RV216 | K-25 | | |
| D502 | H-13 | Q210 | H-11 | RV217 | G-27 | | |
| D600 | B-13 | Q211 | K-4 | RV218 | G-26 | | |
| D601 | H-14 | Q212 | A-26 | RV601 | B-20 | | |
| D603 | I-14 | Q213 | B-7 | RV602 | F-18 | | |
| D604 | H-14 | Q214 | C-7 | RV603 | C-21 | | |
| D701 | K-5 | Q215 | C-7 | RV604 | B-21 | | |
| D702 | K-23 | Q216 | C-6 | RV701 | M-27 | | |
| | | Q217 | D-6 | | | | |
| IC001 | H-30 | Q218 | C-26 | TP001 | G-29 | | |
| IC002 | F-31 | Q219 | C-27 | TP002 | I-30 | | |
| IC003 | C-23 | Q220 | C-7 | TP003 | E-32 | | |
| IC004 | F-29 | Q221 | B-6 | TP004 | G-29 | | |
| IC005 | F-28 | Q222 | C-26 | TP005 | G-29 | | |
| IC007 | C-29 | Q223 | C-7 | TP201 | I-23 | | |
| IC008 | D-29 | Q224 | C-27 | TP202 | G-24 | | |
| IC009 | D-30 | Q225 | D-6 | TP203 | G-22 | | |
| IC010 | L-18 | Q226 | K-9 | TP204 | G-22 | | |
| IC011 | H-17 | Q227 | K-10 | TP205 | G-22 | | |
| IC012 | J-17 | Q228 | J-6 | TP206 | J-21 | | |
| IC120 | K-17 | Q229 | F-3 | TP207 | G-24 | | |
| IC121 | L-17 | Q230 | F-4 | TP208 | K-29 | | |
| IC201 | E-26 | Q232 | K-23 | TP209 | L-22 | | |
| IC202 | J-1 | Q233 | K-30 | TP210 | B-27 | | |
| IC204 | H-23 | Q235 | H-11 | TP211 | B-27 | | |
| IC205 | K-21 | Q236 | I-6 | TP212 | J-27 | | |
| IC206 | D-32 | Q237 | C-9 | TP213 | K-28 | | |
| IC207 | B-30 | Q238 | G-3 | TP214 | K-25 | | |
| IC208 | B-32 | Q239 | F-26 | TP215 | J-24 | | |
| IC209 | B-26 | Q240 | E-26 | TP216 | K-26 | | |
| IC210 | K-7 | Q242 | K-12 | TP217 | K-26 | | |
| IC211 | I-5 | Q243 | F-25 | TP219 | M-26 | | |
| IC212 | J-5 | Q244 | F-7 | TP220 | I-30 | | |
| IC213 | K-3 | Q245 | K-3 | TP221 | L-27 | | |
| IC214 | J-2 | Q246 | H-28 | TP222 | J-29 | | |
| IC215 | J-2 | Q248 | I-31 | TP223 | L-26 | | |
| IC216 | H-7 | Q249 | K-31 | TP224 | J-23 | | |
| IC217 | E-8 | Q250 | K-31 | TP225 | E-27 | | |
| IC218 | F-6 | Q251 | L-31 | TP226 | G-24 | | |
| IC219 | E-25 | Q252 | L-30 | TP227 | L-27 | | |
| IC220 | F-27 | Q253 | L-3 | TP228 | I-30 | | |
| IC500 | E-23 | Q254 | K-31 | TP229 | G-28 | | |
| IC501 | C-22 | Q256 | K-4 | TP230 | M-26 | | |
| IC502 | J-15 | Q257 | H-6 | TP231 | L-21 | | |
| IC600 | B-19 | Q258 | G-6 | TP232 | C-32 | | |
| IC601 | H-20 | Q260 | B-1 | TP233 | C-31 | | |
| IC602 | E-20 | Q261 | B-1 | TP234 | C-31 | | |
| IC603 | F-20 | Q262 | B-2 | TP235 | L-25 | | |
| IC604 | D-14 | Q263 | H-10 | TP236 | M-30 | | |
| IC605 | E-18 | Q264 | I-10 | TP237 | I-32 | | |
| IC606 | H-18 | Q280 | C-31 | TP238 | E-25 | | |
| IC701 | K-5 | Q281 | D-2 | TP239 | J-31 | | |
| IC703 | L-30 | Q282 | D-2 | TP240 | K-27 | | |
| | | Q390 | J-14 | TP241 | E-26 | | |

## SP-2(SERVO), RB-2(REEL STOP) PRINTED WIRING BOARDS

—Ref. No. SP-2 BOARD : 4,000 series, RB-2 BOARD : 14,000 series—

| | | | | | | | |
|---|---|---|---|---|---|---|---|
| -5 | Q010 | I-8 | Q401 | L-4 | TP242 | E-26 | |
| -28 | Q011 | H-31 | Q500 | F-10 | TP603 | G-20 | |
| -4 | Q012 | H-31 | Q501 | F-10 | TP604 | D-18 | |
| -15 | Q013 | G-3 | Q502 | F-9 | TP607 | G-22 | |
| -17 | Q014 | D-10 | Q601 | C-13 | TP608 | C-21 | |
| -16 | Q015 | D-10 | Q602 | C-14 | TP609 | E-18 | |
| -16 | Q020 | B-5 | Q604 | B-14 | | | |
| -16 | Q021 | B-28 | Q605 | B-21 | | | |
| -16 | Q022 | B-28 | Q606 | J-18 | | | |
| -16 | Q023 | B-5 | Q701 | L-9 | | | |
| -2 | Q054 | I-22 | Q702 | L-9 | | | |
| -26 | Q055 | I-22 | Q703 | L-9 | | | |
| -7 | Q060 | F-3 | Q704 | M-24 | | | |
| -7 | Q070 | B-9 | Q705 | K-23 | | | |
| -24 | Q071 | B-24 | Q706 | K-24 | | | |
| -26 | Q080 | K-15 | Q707 | L-9 | | | |
| -27 | Q081 | K-18 | Q708 | L-10 | | | |
| -3 | Q082 | J-16 | Q709 | L-25 | | | |
| -22 | Q083 | H-17 | Q710 | M-21 | | | |
| -30 | Q084 | H-16 | Q711 | L-10 | | | |
| -27 | Q085 | G-16 | Q712 | K-11 | | | |
| -6 | Q086 | H-16 | Q713 | L-10 | | | |
| -24 | Q087 | E-17 | Q714 | L-23 | | | |
| -30 | Q088 | F-16 | Q715 | L-22 | | | |
| -1 | Q090 | D-23 | Q716 | M-10 | | | |
| -1 | Q091 | D-24 | Q717 | K-10 | | | |
| -2 | Q103 | B-16 | | | | | |
| -6 | Q120 | K-16 | RV201 | J-26 | | | |
| -6 | Q121 | C-17 | RV202 | J-26 | | | |
| -30 | Q122 | D-16 | RV203 | J-26 | | | |
| -11 | Q123 | K-16 | RV204 | J-26 | | | |
| -31 | Q201 | B-5 | RV205 | L-32 | | | |
| -7 | Q202 | B-28 | RV206 | K-31 | | | |
| -7 | Q203 | B-27 | RV207 | L-31 | | | |
| -27 | Q204 | B-6 | RV208 | L-32 | | | |
| -27 | Q205 | K-26 | RV209 | D-25 | | | |
| -14 | Q206 | C-30 | RV210 | M-29 | | | |
| -10 | Q207 | C-2 | RV212 | G-25 | | | |
| -10 | Q208 | D-32 | RV215 | K-25 | | | |
| -11 | Q209 | D-30 | RV216 | K-25 | | | |
| -13 | Q210 | H-11 | RV217 | G-27 | | | |
| -13 | Q211 | K-4 | RV218 | G-26 | | | |
| -14 | Q212 | A-26 | RV601 | B-20 | | | |
| -14 | Q213 | B-7 | RV602 | F-18 | | | |
| -14 | Q214 | C-7 | RV603 | C-21 | | | |
| -5 | Q215 | C-7 | RV604 | B-21 | | | |
| -23 | Q216 | C-6 | RV701 | M-27 | | | |
| | Q217 | D-6 | | | | | |
| -30 | Q218 | C-26 | TP001 | G-29 | | | |
| -31 | Q219 | C-27 | TP002 | I-30 | | | |
| -23 | Q220 | C-7 | TP003 | E-32 | | | |
| -29 | Q221 | B-6 | TP004 | G-29 | | | |
| -28 | Q222 | C-26 | TP005 | G-29 | | | |
| -29 | Q223 | C-7 | TP201 | I-23 | | | |
| -29 | Q224 | C-27 | TP202 | G-24 | | | |
| -30 | Q225 | D-6 | TP203 | G-22 | | | |
| -18 | Q226 | K-9 | TP204 | G-22 | | | |
| -17 | Q227 | K-10 | TP205 | G-22 | | | |
| -17 | Q228 | J-6 | TP206 | J-21 | | | |
| -17 | Q229 | F-3 | TP207 | G-24 | | | |
| -17 | Q230 | F-4 | TP208 | K-29 | | | |
| -26 | Q232 | K-23 | TP209 | L-22 | | | |
| -1 | Q233 | K-30 | TP210 | B-27 | | | |
| -23 | Q235 | H-11 | TP211 | B-27 | | | |
| -21 | Q236 | I-6 | TP212 | J-27 | | | |
| -32 | Q237 | C-9 | TP213 | K-28 | | | |
| -30 | Q238 | G-3 | TP214 | K-25 | | | |
| -32 | Q239 | F-26 | TP215 | J-24 | | | |
| -26 | Q240 | E-26 | TP216 | K-26 | | | |
| -7 | Q242 | K-12 | TP217 | K-26 | | | |
| -5 | Q243 | F-25 | TP219 | M-26 | | | |
| -5 | Q244 | F-7 | TP220 | I-30 | | | |
| -3 | Q245 | K-3 | TP221 | L-27 | | | |
| -2 | Q246 | H-28 | TP222 | J-29 | | | |
| -2 | Q248 | I-31 | TP223 | L-26 | | | |
| -7 | Q249 | K-31 | TP224 | J-23 | | | |
| -8 | Q250 | K-31 | TP225 | E-27 | | | |
| -6 | Q251 | L-31 | TP226 | G-24 | | | |
| -25 | Q252 | L-30 | TP227 | L-27 | | | |
| -27 | Q253 | L-3 | TP228 | I-30 | | | |
| -23 | Q254 | K-31 | TP229 | G-28 | | | |
| -22 | Q256 | K-4 | TP230 | M-26 | | | |
| -15 | Q257 | H-6 | TP231 | L-21 | | | |
| -19 | Q258 | G-6 | TP232 | C-32 | | | |
| -20 | Q260 | B-1 | TP233 | C-31 | | | |
| -20 | Q261 | B-1 | TP234 | C-31 | | | |
| -20 | Q262 | B-2 | TP235 | L-25 | | | |
| -14 | Q263 | H-10 | TP236 | M-30 | | | |
| -18 | Q264 | I-10 | TP237 | I-32 | | | |
| -18 | Q280 | C-31 | TP238 | E-25 | | | |
| -5 | Q281 | D-2 | TP239 | J-31 | | | |
| -30 | Q282 | D-2 | TP240 | K-27 | | | |
| | Q390 | J-14 | TP241 | E-26 | | | |

**SP-2** BOARD (SOLDER SIDE)

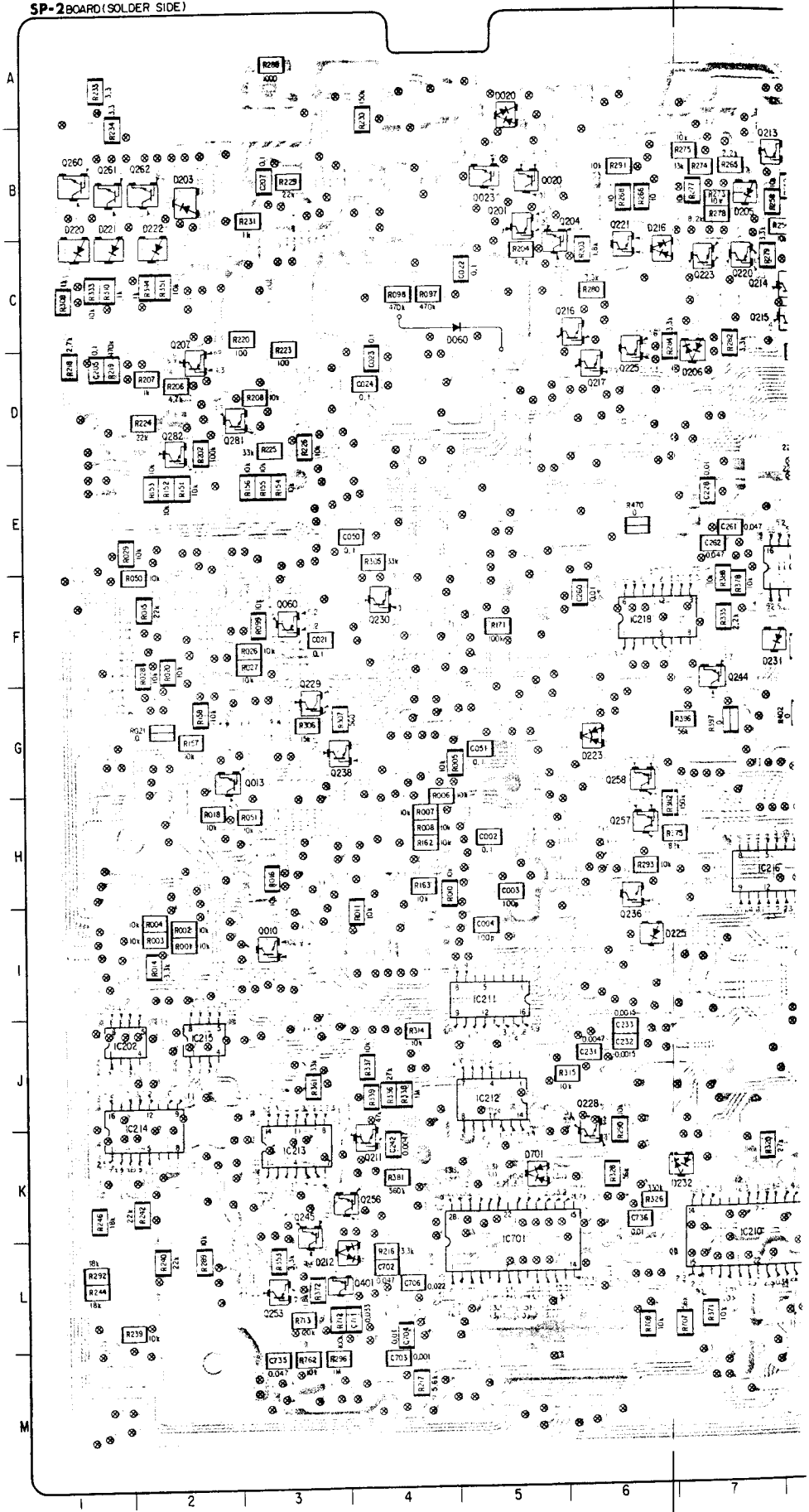

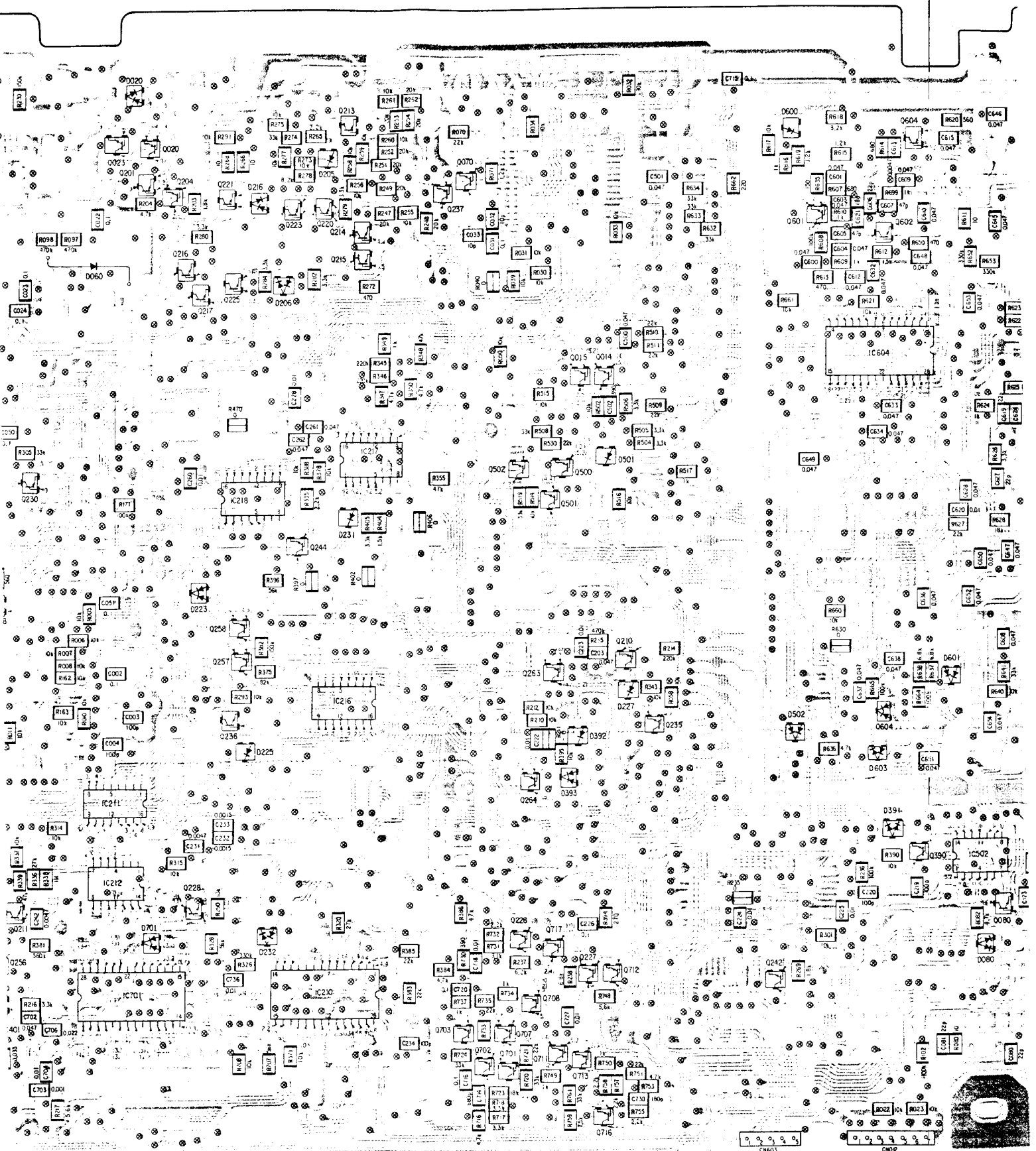

## SP-2 BOARD (COMPONENT SIDE)

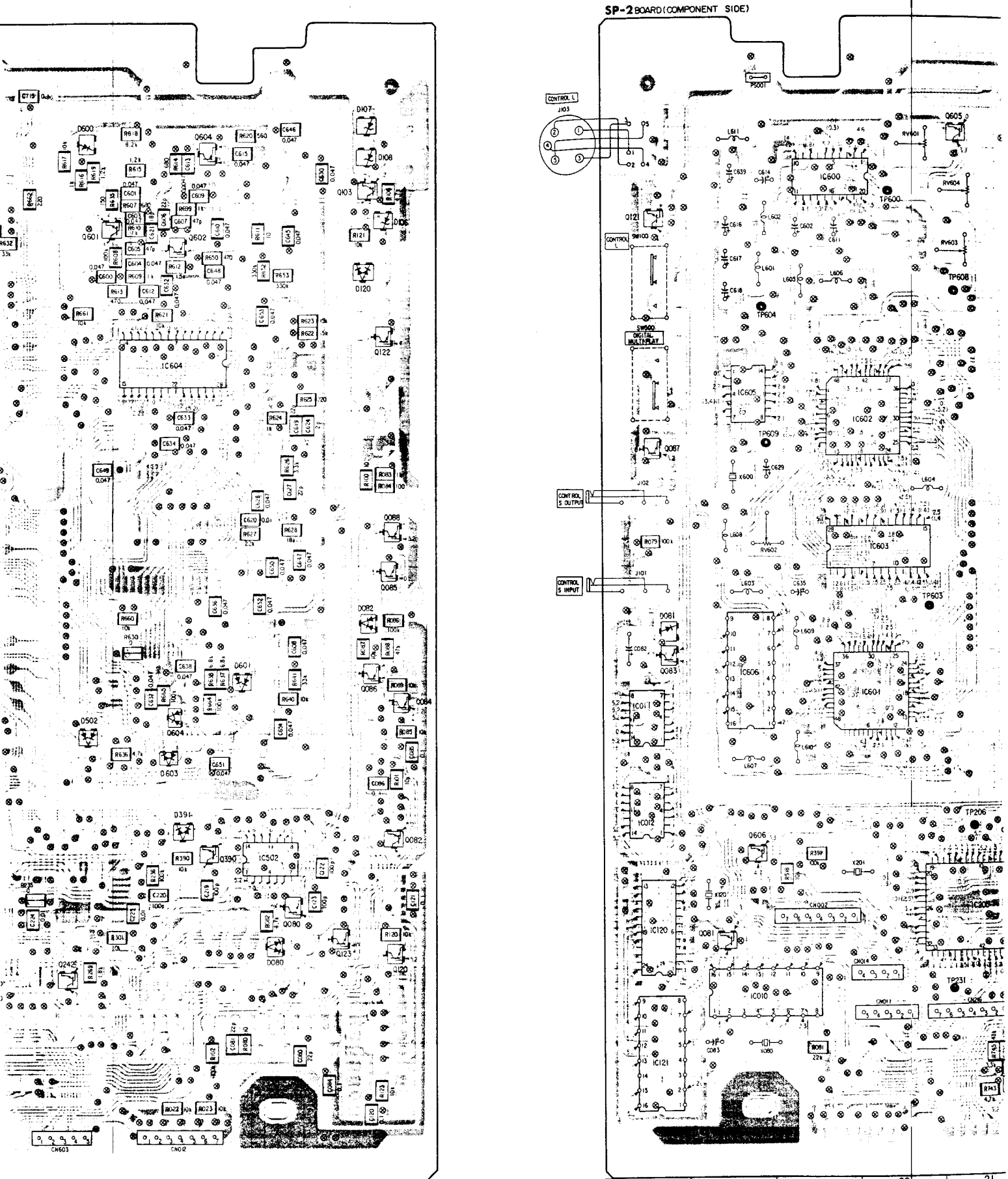

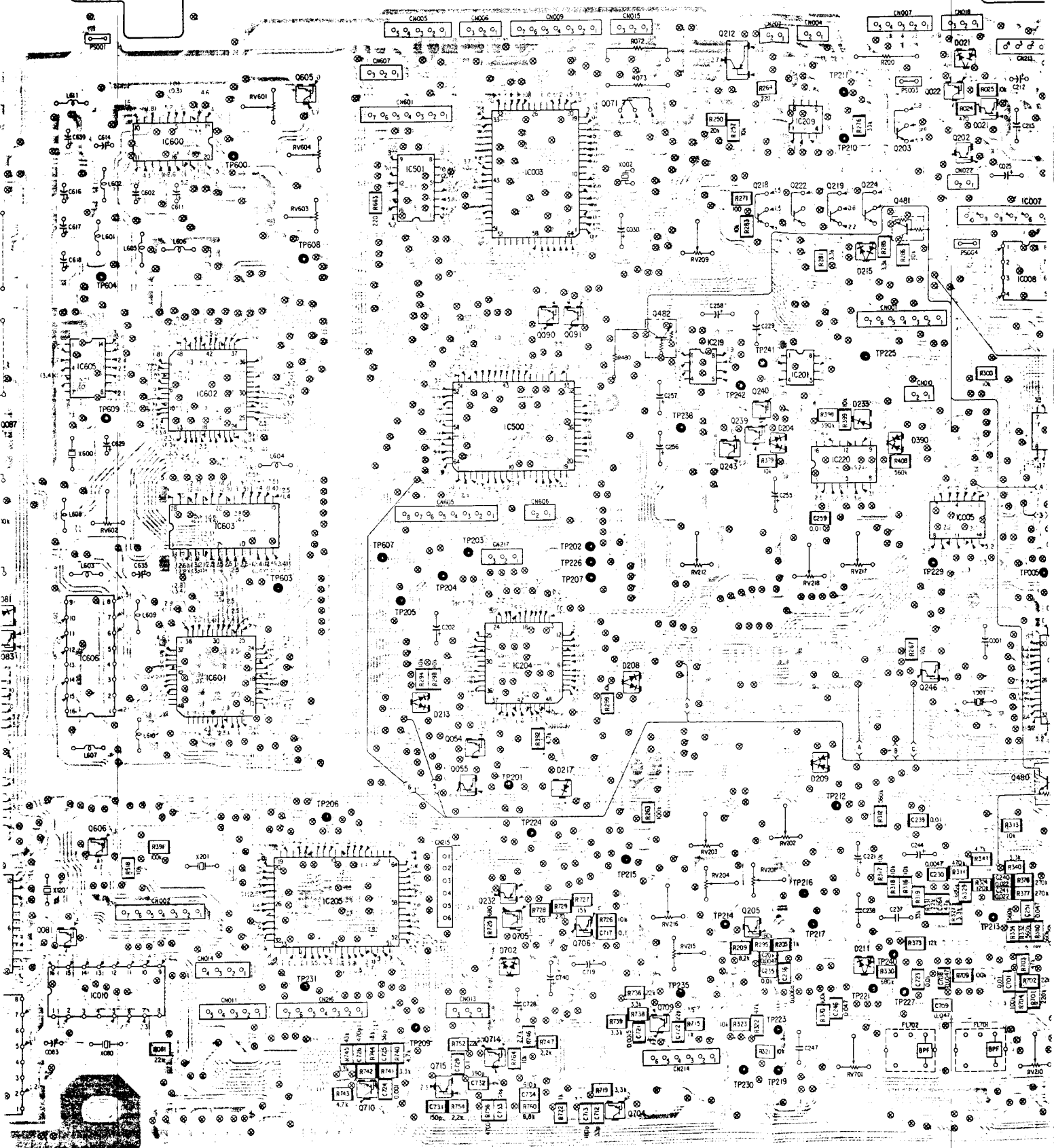




SERVO(1) SERVO(1)

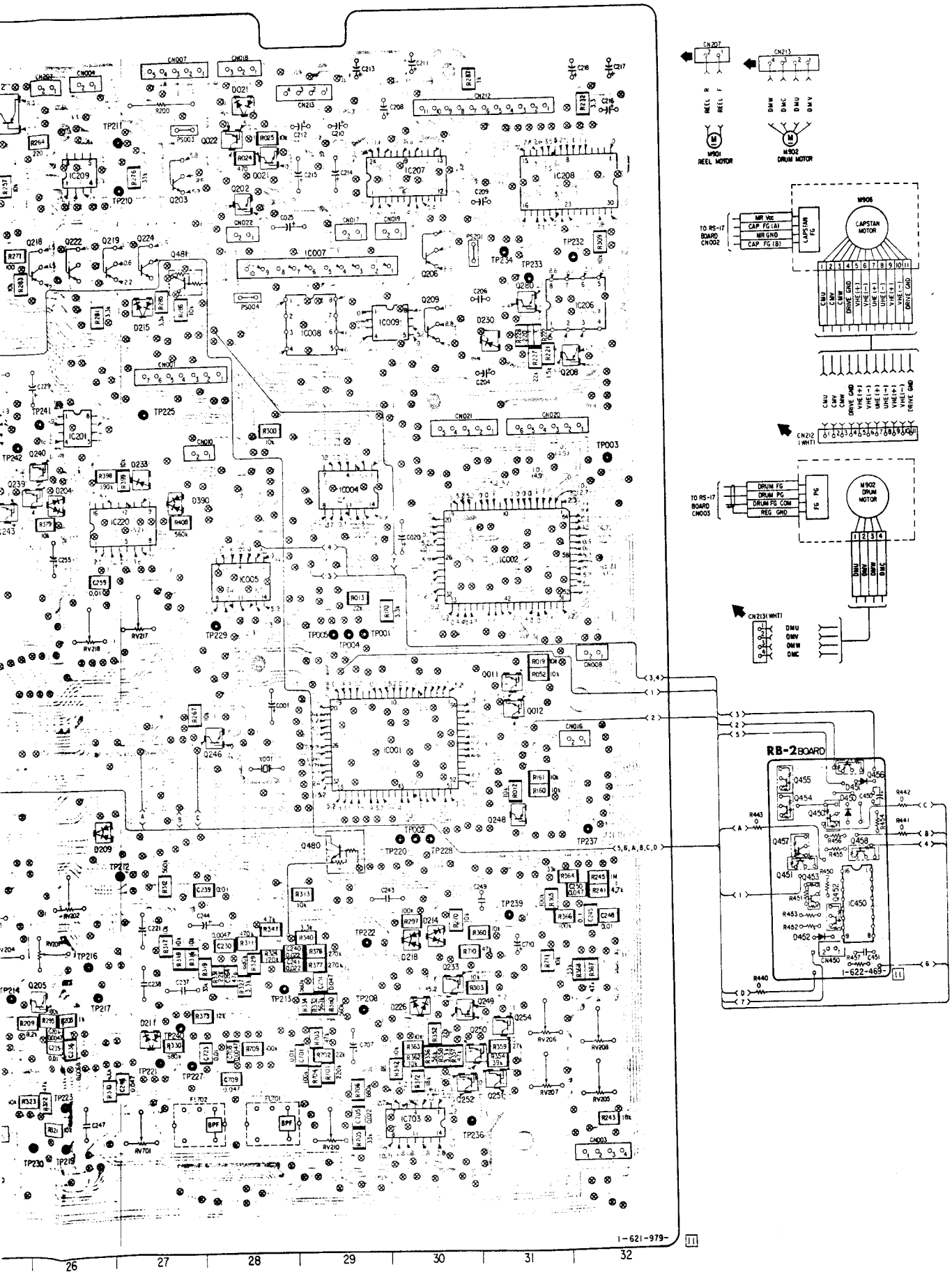

M901 REEL MOTOR
M902 DRUM MOTOR
M906 CAPSTAN MOTOR
TO RS-17 BOARD CN002
TO RS-17 BOARD CN003
RB-2 BOARD
1-622-469-
1-621-979-
26
27
28
29
30
31
32




(1) SERVO(1)

## SP-2(SERVO), RB-2(REEL STOP) SCHEMATIC DIAGRAM

—Ref. No. SP-2 BOARD : 4,000 series, RB-2 BOARD : 14,000 series—

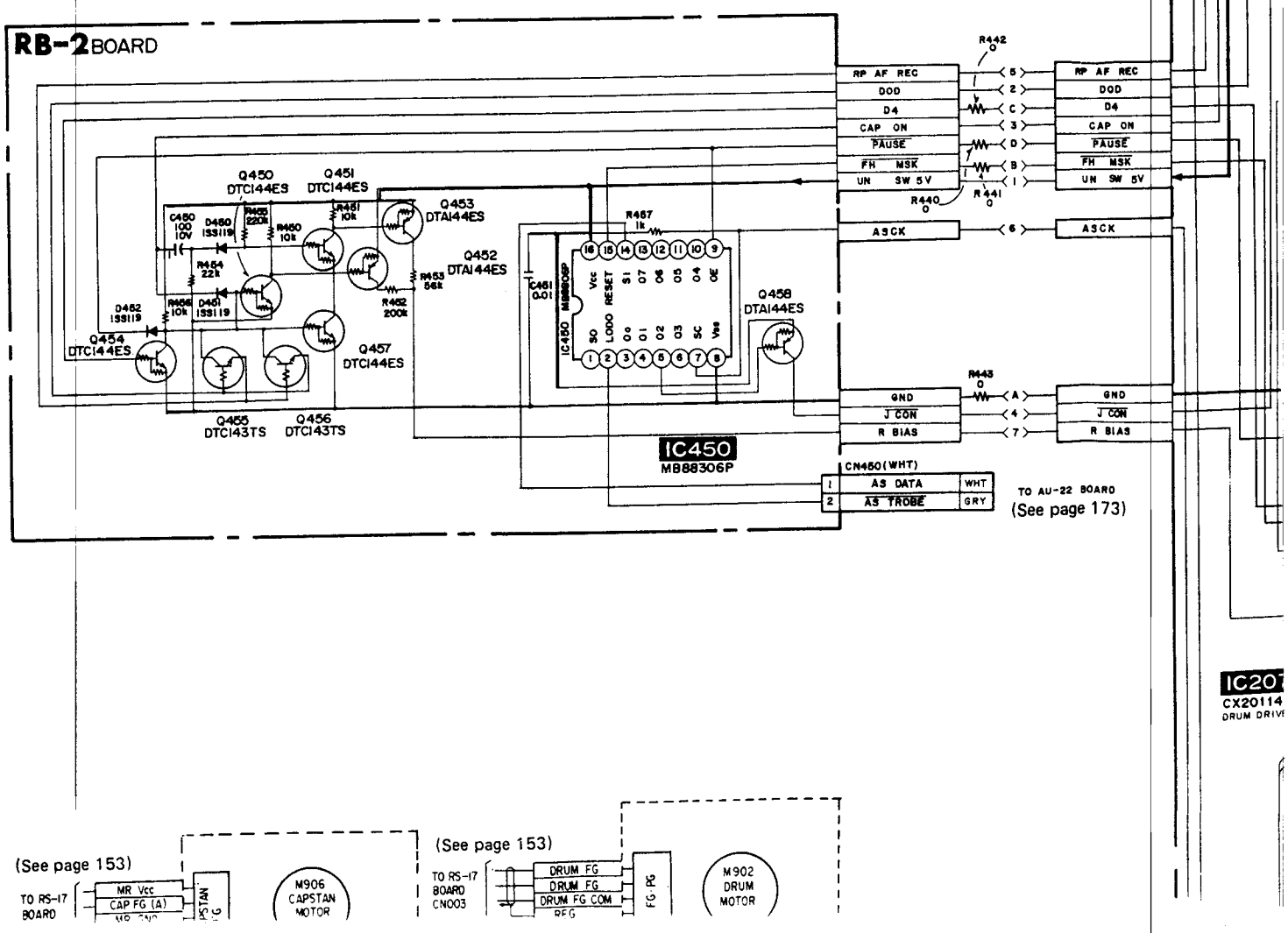

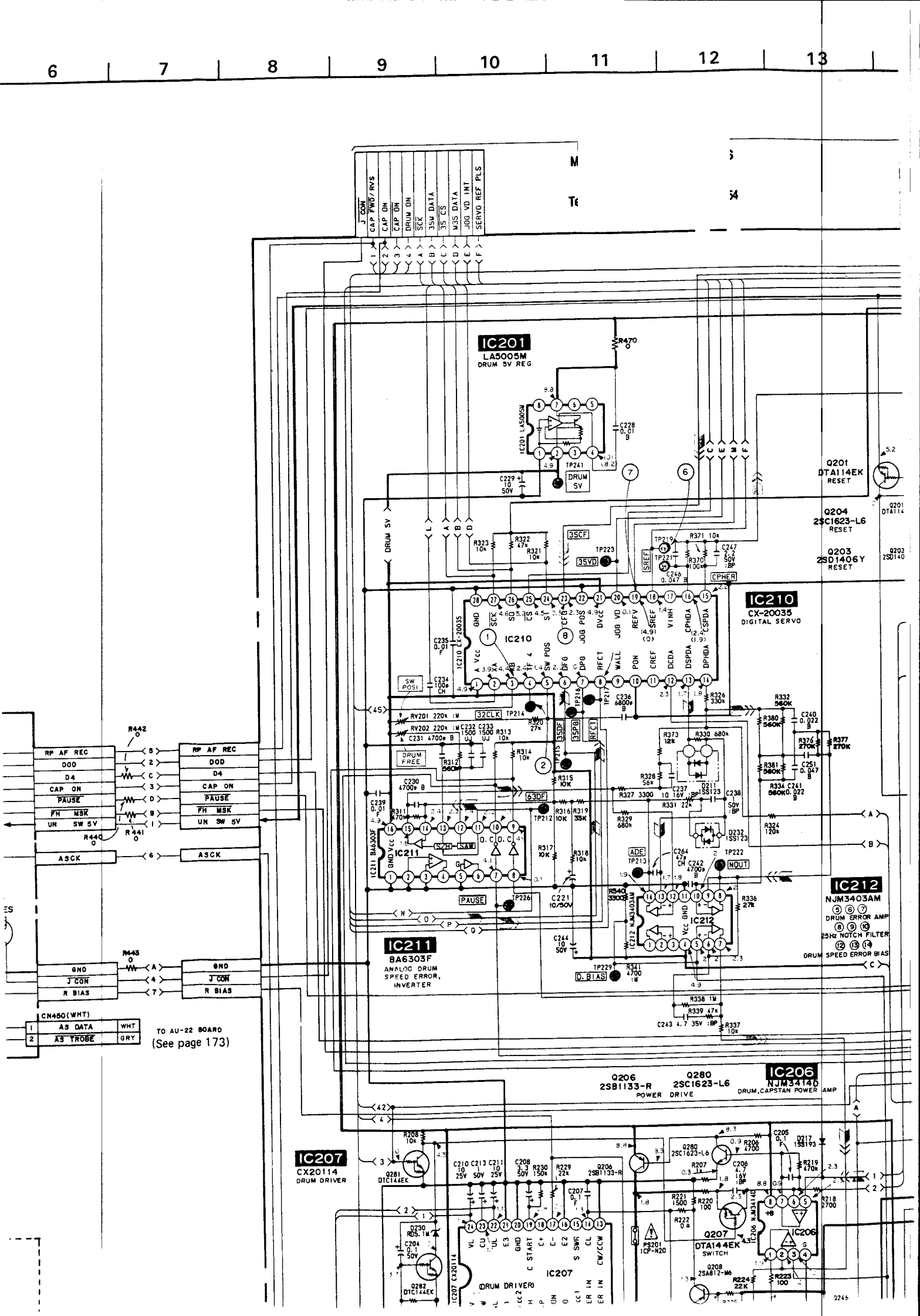
6
7
8
9
10
11
12
13
IC201
LA5005M
DRUM 5V REG
IC210
CX-20035
DIGITAL SERVO
IC211
BA6303F
ANALOG DRUM SPEED ERROR, INVERTER
IC212
NJM3403AM
DRUM ERROR AMP
25Hz NOTCH FILTER
DRUM SPEED ERROR BIAS
IC206
NJM3414D
DRUM,CAPSTAN POWER AMP
IC207
CX20114
DRUM DRIVER
Q201
DTA114EK
RESET
Q204
2SC1623-L6
RESET
Q203
2SD1406Y
RESET
Q206
2SB1133-R
POWER DRIVE
Q280
2SC1623-L6
Q207
DTA144EK
SWITCH
Q208
2SA812-M6
Q281
DTC144EK
Q282
DTC144EK
Q230
RDS.1M
J CON
CAP FWD/RVS
CAP ON
CAP ON
DRUM ON
SCK
3SW DATA
3S CS
W3S DATA
JOG VD INT
SERVO REF PLS
DRUM 5V
DRUM FREE
SW POSI
32CLK
63DF
35DF
35PB
RFCT
PAUSE
ADE
3SCF
3SVD
SREF
CPHER
NOUT
D.BIAS
RP AF REC
DOD
D4
CAP ON
PAUSE
FH MSK
UN SW 5V
ASCK
GND
J CON
R BIAS
CN450(WHT)
AS DATA
AS TROBE
TO AU-22 BOARD
(See page 173)

(See pages 134, 135)

SP-2 BOARD (1/3) SYSTEM CONTROL

ontact
ERVICES
innor
Te... 14-352554
Email:- enquiries@mauritron.co.uk

RESET | DRIVE 5V | DRIVE GND | DRIVE 9V | REG GND | REG 5V | UNS 5V | STEP | FH CONT1 | FH CONT2 | FH MSK

REEL DTR | SLOW | PAUSE | X-1 | X-3 | CAP FG

Q245,249,254,257,258
DTA144EK
CUE, REV, X-1, X-3 CAPSTAN SPEED CORRECTION

Q252,253
2SA812-M6
CUE, REV, X-1, X-3 CAPSTAN SPEED CORRECTION

Q201 DTA114EK RESET

Q202 DTC114EK RESET

Q203 2SD1406Y RESET

Q204 2SC1623-L6 RESET

IC210
CX-20035
DIGITAL SERVO

IC213
TC4066BF
AGC HOLD
DC GAIN SWITCH
AC GAIN SWITCH

IC214
TC4052BF
CAPSTAN BIAS SELECTOR
ATF GAIN SW

IC215
μPC358G2
CAPSTAN BIAS
CAPSTAN ERROR AMP

IC212
NJM3403AM
DRUM ERROR AMP
25Hz NOTCH FILTER
DRUM SPEED ERROR BIAS

IC206
NJM3414D
DRUM, CAPSTAN POWER AMP

Q206 2SB1133-R POWER DRIVE

Q280 2SC1623-L6

Q250,251 2SC1623-L6 CUE, REV, X-1, X-3 CAPSTAN SPEED CORRECTION

Q207 DTA144EK SWITCH

Q208 2SA812-M6

Q480 DTC144ES SLOW

Q246 DTC144ES DIR

Q228 DTC144EK SWITCH

IC216 IC217
TC4053BF
SWITCH

D390 1S2837

(See pages 134, 135)

TO SP-2 BOARD (1/3) SYSTEM CONTROL

For Servi
MAURITRO
8 Cherr
O
Tel:- 01844-3
Email:- en

REEL DIR | SLOW | PAUSE | X-1 | X-3 | CAP FG | D4 | D3 | D2 | D1 | D0 | REV | CUE

M ATF LOCK | RFPK | TSA | P ATF LOCK | TSB | SEL 16 | STID | SEL 1 | SEL 2 | HCHBM | SP VIDEO REC 2 | SP VIDEO REC 1 | VIDEO REC | TAPE2/TAPE1 | LAMP | MULTI | NPULSE | REEL SWD | DOD | AUTO | SP/LP | RP PB MODE | JOG | MRF SW PLS

Q5,249,254,257,258
DTA144EK
REV, X-1, X-3 CAPSTAN
SPEED CORRECTION

Q252,253
2SA812-M6
CUE, REV, X-1, X-3 CAPSTAN
SPEED CORRECTION

Q264 DTA114EK INVERTER
Q390 DTC144EK INVERTER
Q263 DTA114EK SWITCH

Q229
DTA144E
D-A CON

IC204
MB64H428
FG, PG PROCESS

Q210
DTC144EK
INVERTER

Q250, 251
2SC1623-L6
CUE, REV, X-1, X-3 CAPSTAN
SPEED CORRECTION
R359 27k
(±0.5%, 1/16W)

IC215
μPC358G2
CAPSTAN BIAS
CAPSTAN ERROR
AMP

IC214
TC4052BF

IC701
CXA1042M
ATF SERVO

Q205
2SC1623-L5
4.43MHz AMP

Q709
2SA812-M6
LPF

Q710
2SC1623-L6
LPF

Q228
DTC144EK
SWITCH

IC202
μPC358G2
AMP

Q701, 702
2SC1623-L6

Q703
DTC144EK
NORMAL / MULTI SWITCH

IC217
TC40538BF
SWITCH

D390
1S2837

Don't Touch!

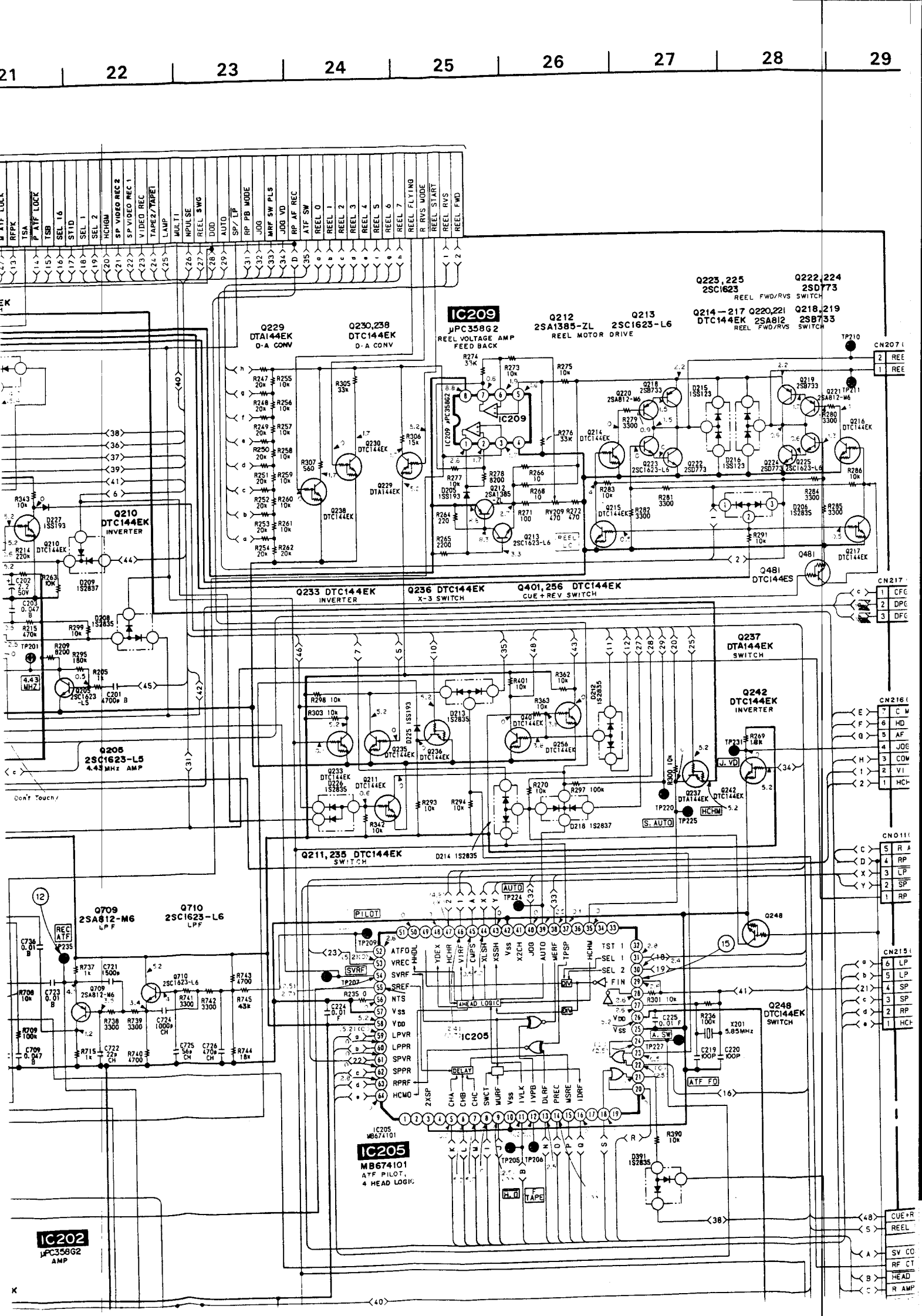

21
22
23
24
25
26
27
28
29
IC209
μPC358G2
REEL VOLTAGE AMP
FEED BACK
Q229
DTA144EK
D-A CONV
Q230,238
DTC144EK
D-A CONV
Q212
2SA1385-ZL
Q213
2SC1623-L6
REEL MOTOR DRIVE
Q223,225
2SC1623
Q222,224
2SD773
REEL FWD/RVS SWITCH
Q214-217
DTC144EK
Q220,221
2SA812
Q218,219
2SB733
REEL FWD/RVS SWITCH
Q210
DTC144EK
INVERTER
Q233 DTC144EK
INVERTER
Q236 DTC144EK
X-3 SWITCH
Q401,256 DTC144EK
CUE+REV SWITCH
Q481
DTC144ES
Q237
DTA144EK
SWITCH
Q242
DTC144EK
INVERTER
Q205
2SC1623-L5
4.43MHz AMP
Don't Touch!
Q211,235 DTC144EK
SWITCH
Q709
2SA812-M6
LPF
Q710
2SC1623-L6
LPF
Q248
DTC144EK
SWITCH
IC205
MB674101
ATF PILOT,
4 HEAD LOGIC
IC202
μPC358G2
AMP

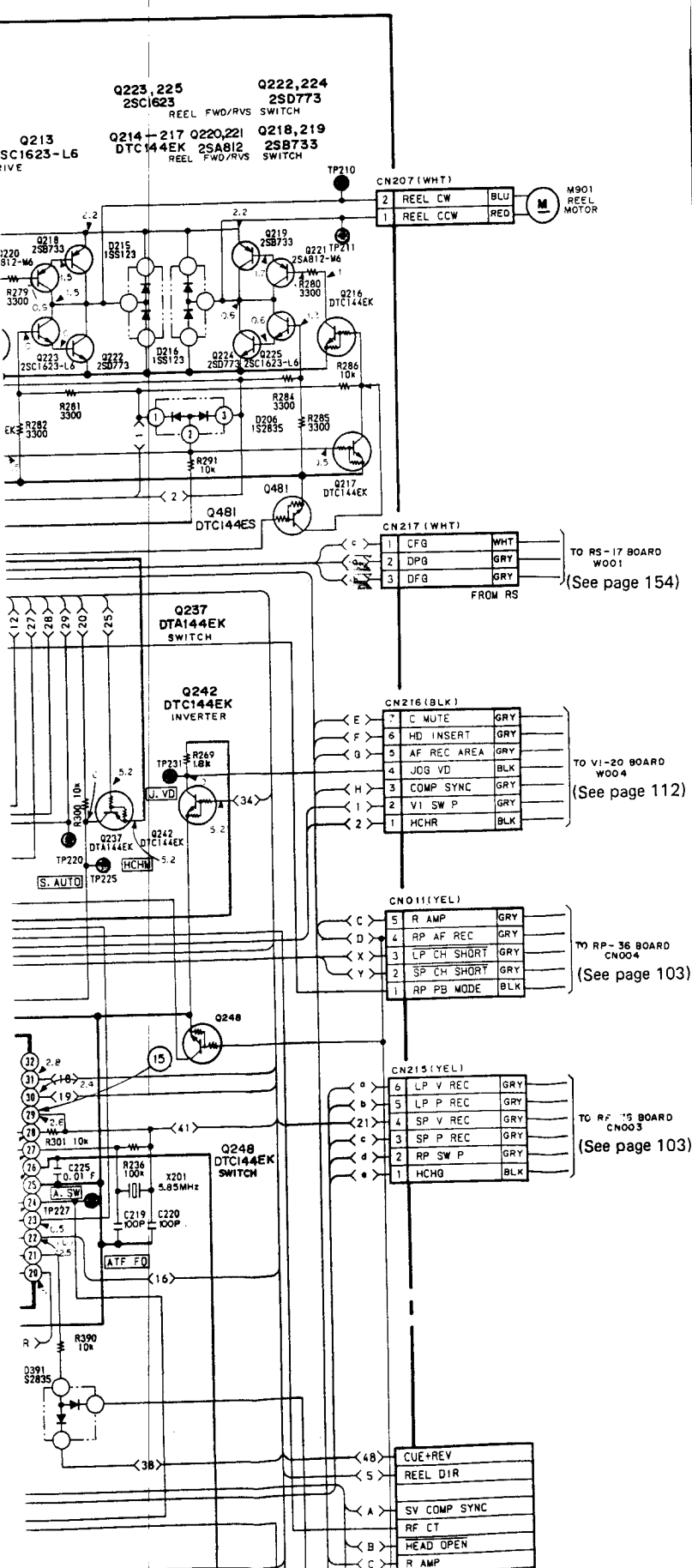


**Note:**

- Caution when replacing chip parts.
  New parts must be attached after removal of chip.
  Be careful not to heat the minus side of tantalum capacitor, because it is damaged by the heat.
- All resistors are in ohms, 1/10W unless otherwise noted.
  kΩ: 1000Ω, MΩ: 1000kΩ.
- All capacitors are in μF unless otherwise noted. pF : μμF.
  50V or less are not indicated except for electrolytice and tantalums.
- ▭ : panel designation.
- △ : internal component.
- ▭ : adjustment for repair.
- ▬ : B + bus.
- Voltages are dc with respect to ground unless otherwise noted.
- Readings are taken with a colour-bar signal input.
- Readings are taken with a digital multimeter (DC10MΩ).
- Voltage variations may be noted due to normal production tolerances.

**Note: The components identified by shading and mark ⚠ are critical for safety. Replace only with part number specified.**

When indicating parts by reference number, please include the board name.

**Signal path**

| | REC | REC/PB | PB |
|---|---|---|---|
| Drum speed servo | | ▰ | |
| Drum phase servo | | ▰〉 | |
| Drum servo (speed and phase) | | ▰〉〉 | |
| Capstan speed servo | | ▬ | |
| Capstan phase servo | ▰〉 | | Σ〉 |
| Capstan servo (speed and phase) | | ▰〉〉 | |
| | | | ═ |

**SP-2** BOARD (SERVO)

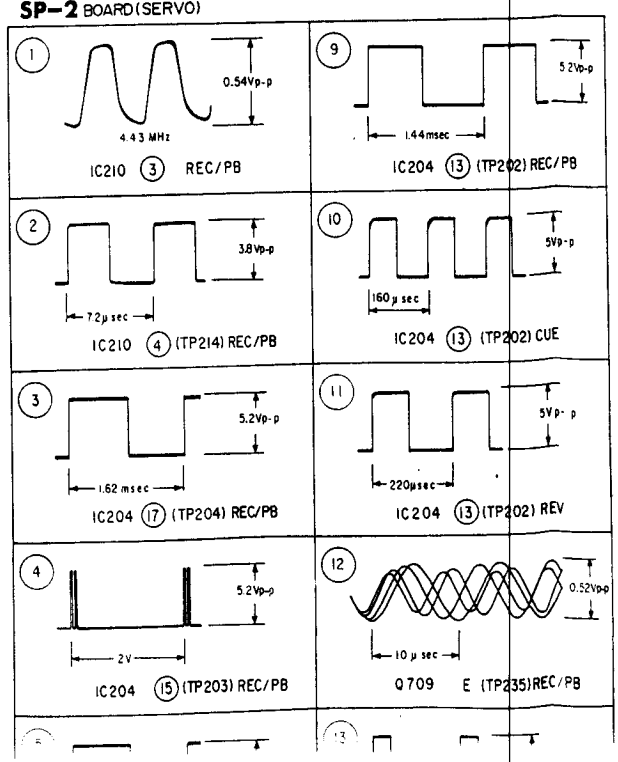

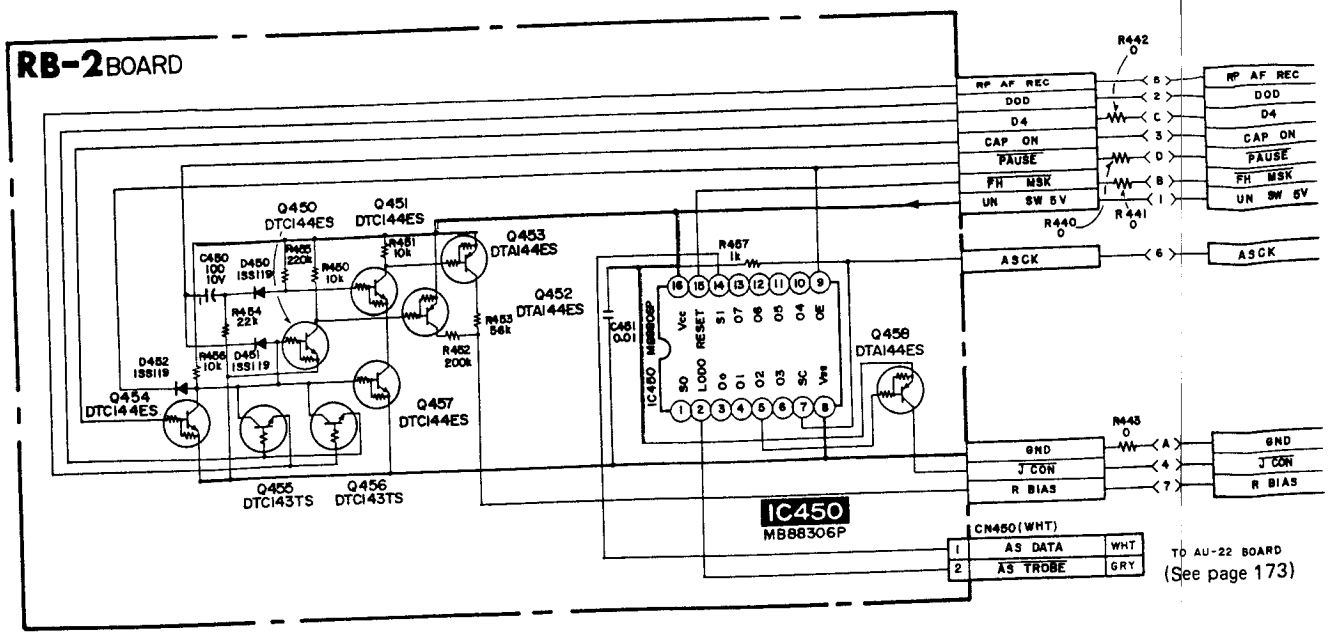
RB-2 BOARD
Q450 DTC144ES
Q451 DTC144ES
Q453 DTA144ES
Q452 DTA144ES
Q454 DTC144ES
Q455 DTC143TS
Q456 DTC143TS
Q457 DTC144ES
Q458 DTA144ES
IC450
MB88306P
RP AF REC
DOD
D4
CAP ON
PAUSE
FH MSK
UN SW 5V
ASCK
GND
J CON
R BIAS
CN450(WHT)
AS DATA
AS STROBE
TO AU-22 BOARD
(See page 173)

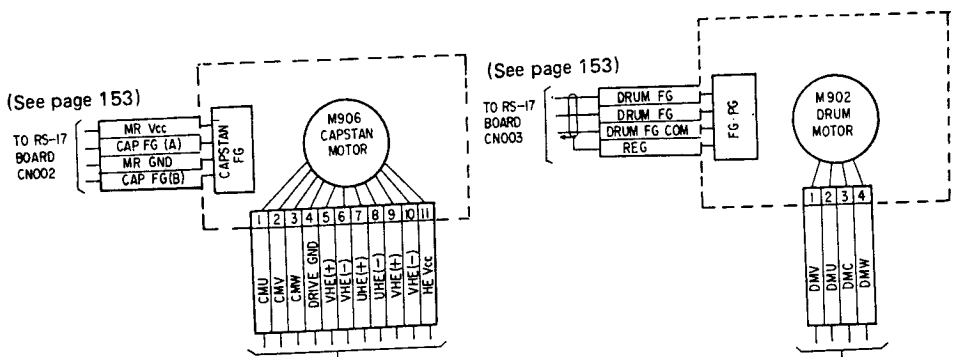
(See page 153)
TO RS-17 BOARD CN002
MR Vcc
CAP FG (A)
MR GND
CAP FG(B)
CAPSTAN FG
M906 CAPSTAN MOTOR
CMU
CMV
CMW
DRIVE GND
VHE(+)
VHE(-)
UHE(+)
UHE(-)
VHE(+)
VHE(-)
HE Vcc
(See page 153)
TO RS-17 BOARD CN003
DRUM FG
DRUM FG
DRUM FG COM
REG
FG·PG
M902 DRUM MOTOR
DMV
DMU
DMC
DMW

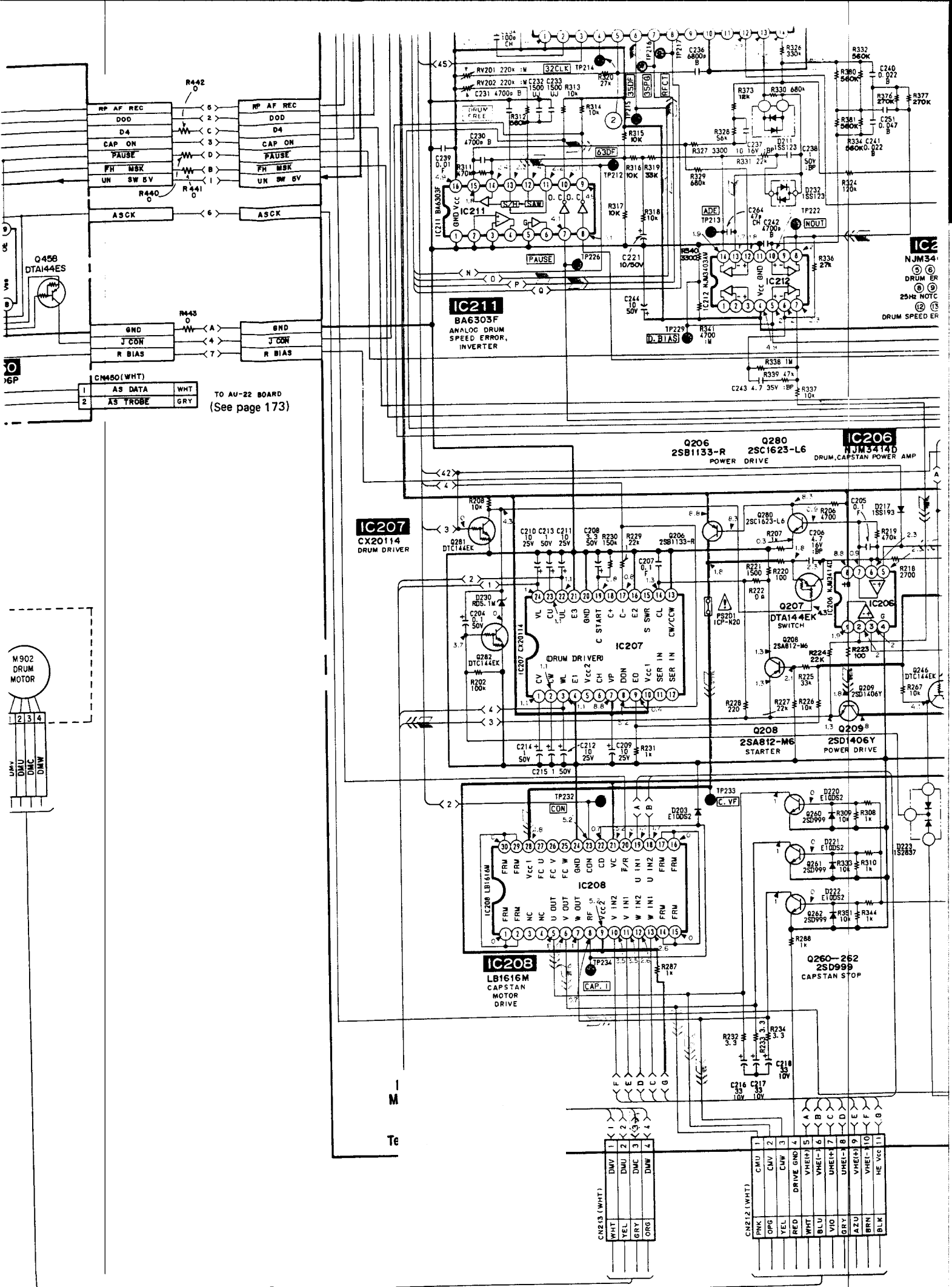
IC211
BA6303F
ANALOG DRUM SPEED ERROR, INVERTER
IC207
CX20114
DRUM DRIVER
IC206
NJM3414D
DRUM,CAPSTAN POWER AMP
Q206
2SB1133-R
POWER DRIVE
Q280
2SC1623-L6
POWER DRIVE
Q207
DTA144EK
SWITCH
Q208
2SA812-M6
STARTER
Q209
2SD1406Y
POWER DRIVE
IC208
LB1616M
CAPSTAN MOTOR DRIVE
Q260–262
2SD999
CAPSTAN STOP
Q458
DTAI44ES
M902
DRUM MOTOR
CN460(WHT)
AS DATA
AS TROBE
TO AU-22 BOARD
(See page 173)
CN213 (WHT)
CN212 (WHT)

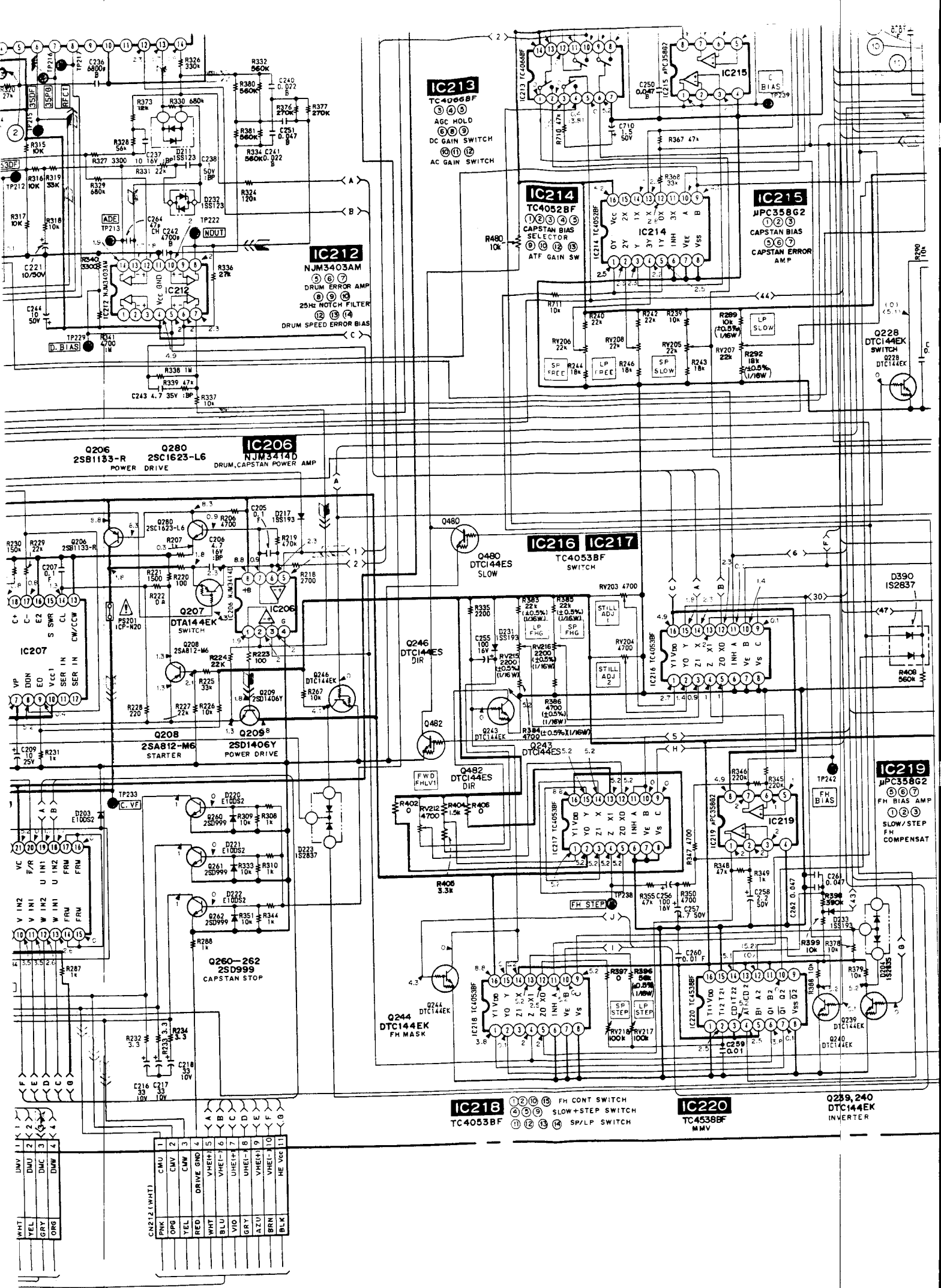
IC213
TC4066BF
AGC HOLD
DC GAIN SWITCH
AC GAIN SWITCH
IC214
TC4052BF
CAPSTAN BIAS SELECTOR
ATF GAIN SW
IC215
μPC358G2
CAPSTAN BIAS
CAPSTAN ERROR AMP
IC212
NJM3403AM
DRUM ERROR AMP
25Hz NOTCH FILTER
DRUM SPEED ERROR BIAS
Q206
2SB1133-R
POWER DRIVE
Q280
2SC1623-L6
IC206
NJM3414D
DRUM,CAPSTAN POWER AMP
IC216 IC217
TC4053BF
SWITCH
Q480
DTC144ES
SLOW
Q246
DTC144ES
DIR
Q482
DTC144ES
DIR
Q207
DTA144EK
SWITCH
Q208
2SA812-M6
STARTER
Q209
2SD1406Y
POWER DRIVE
IC207
Q260–262
2SD999
CAPSTAN STOP
Q244
DTC144EK
FH MASK
IC219
μPC358G2
FH BIAS AMP
SLOW/STEP FH COMPENSAT
IC218
TC4053BF
FH CONT SWITCH
SLOW+STEP SWITCH
SP/LP SWITCH
IC220
TC4538BF
MMV
Q239, 240
DTC144EK
INVERTER
Q228
DTC144EK
SWITCH
D390
IS2837
CN212 (WHT)

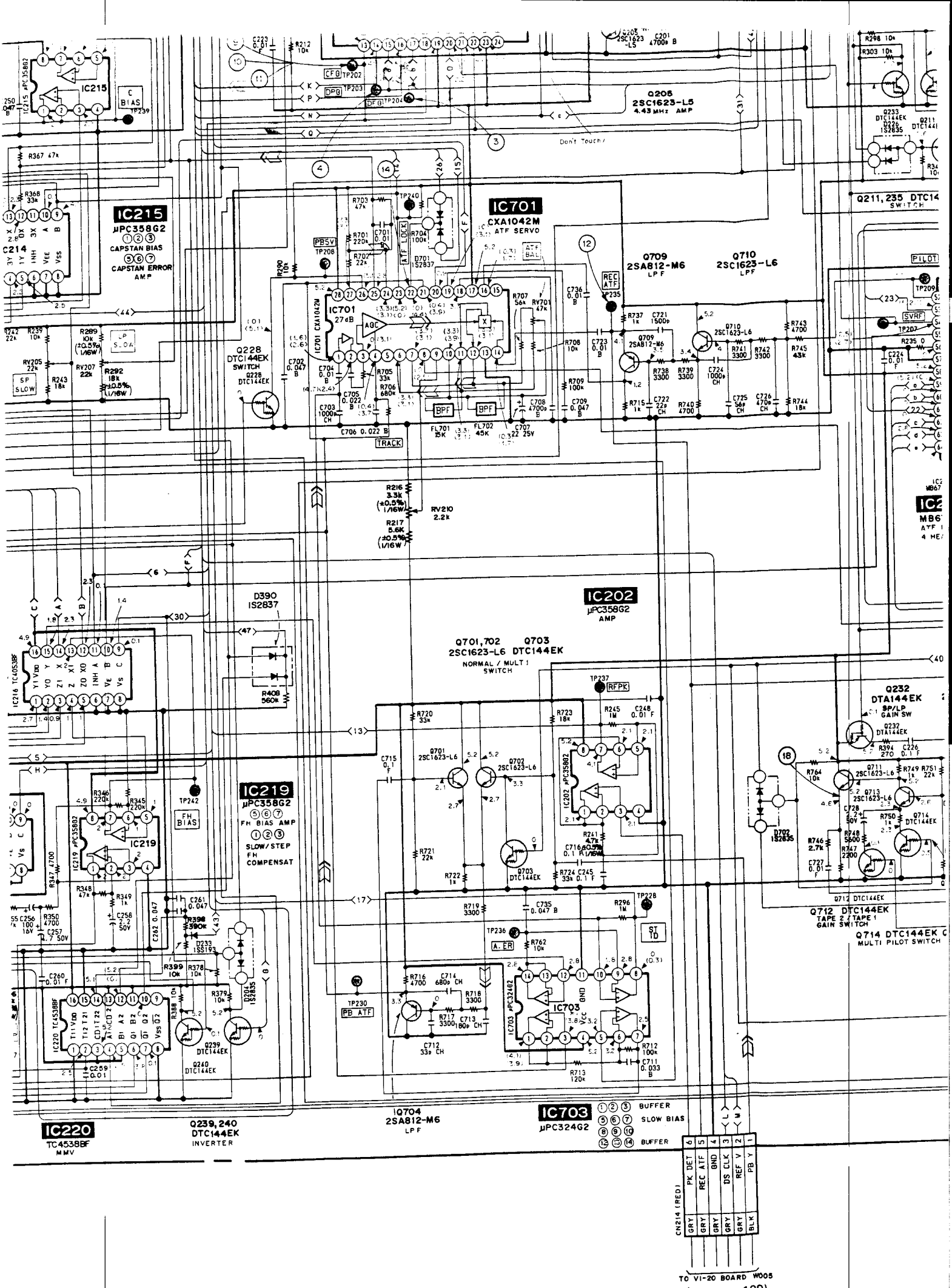
IC215
μPC358G2
CAPSTAN BIAS
CAPSTAN ERROR AMP
IC701
CXA1042M
ATF SERVO
Q709
2SA812-M6
LPF
Q710
2SC1623-L6
LPF
Q205
2SC1623-L5
4.43 MHz AMP
Don't Touch!
Q211, 235 DTC14
SWITCH
Q228
DTC144EK
SWITCH
IC202
μPC358G2
AMP
Q701,702 Q703
2SC1623-L6 DTC144EK
NORMAL / MULTI SWITCH
D390
1S2837
IC219
μPC358G2
FH BIAS AMP
SLOW/STEP FH COMPENSAT
Q232
DTA144EK
SP/LP GAIN SW
Q712 DTC144EK
TAPE 2 / TAPE 1 GAIN SWITCH
Q714 DTC144EK
MULTI PILOT SWITCH
IC220
TC4538BF
MMV
Q239,240
DTC144EK
INVERTER
Q704
2SA812-M6
LPF
IC703
μPC324G2
BUFFER
SLOW BIAS
BUFFER
CN214 (RED)
PK DET
REC ATF
GND
DS CLK
REF V
PB Y
TO VI-20 BOARD W005
(See page 109)

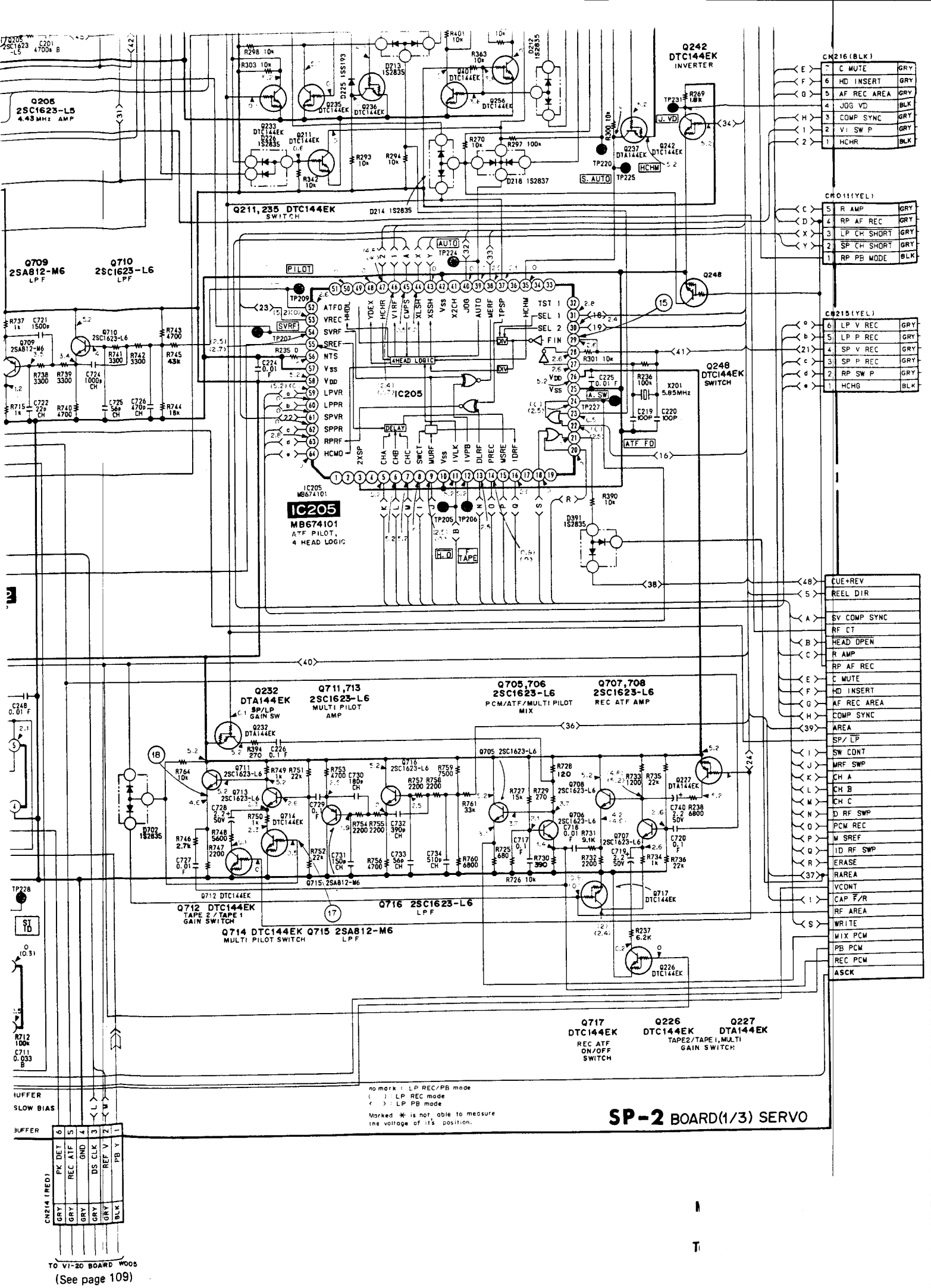
Q205 2SC1623-L5 4.43MHz AMP
Q709 2SA812-M6 LPF
Q710 2SC1623-L6 LPF
Q211, 235 DTC144EK SWITCH
Q242 DTC144EK INVERTER
Q248 DTC144EK SWITCH
IC205 MB674101 ATF PILOT, 4 HEAD LOGIC
Q232 DTA144EK SP/LP GAIN SW
Q711,713 2SC1623-L6 MULTI PILOT AMP
Q705,706 2SC1623-L6 PCM/ATF/MULTI PILOT MIX
Q707,708 2SC1623-L6 REC ATF AMP
Q712 DTC144EK TAPE 2 / TAPE 1 GAIN SWITCH
Q714 DTC144EK Q715 2SA812-M6 MULTI PILOT SWITCH LPF
Q716 2SC1623-L6 LPF
Q717 DTC144EK REC ATF ON/OFF SWITCH
Q226 DTC144EK
Q227 DTA144EK TAPE2/TAPE1, MULTI GAIN SWITCH
CN216(BLK)
CN211(YEL)
CN215(YEL)
CN214(RED)
TO VI-20 BOARD WOOS
(See page 109)
SP-2 BOARD(1/3) SERVO

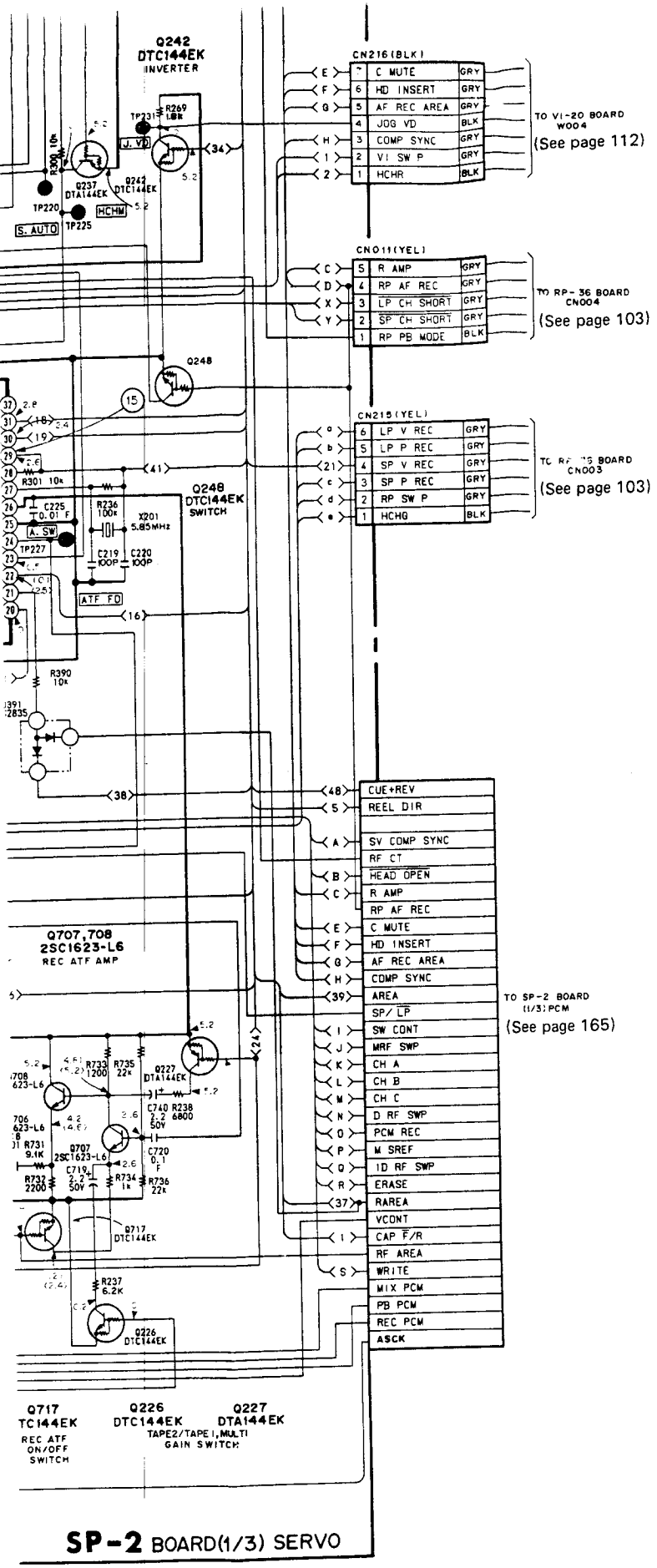


| | | | | |
|---|---|---|---|---|
| F | Drum servo (speed and phase) | | | |
| | Capstan speed servo | | | |
| | Capstan phase servo | | | |
| G | Capstan servo (speed and phase) | | | |

**SP-2** BOARD(SERVO)

| | | |
|---|---|---|
| H | ① 0.54Vp-p, 4.43 MHz — IC210 ③ REC/PB | ⑨ 5.2Vp-p, 1.44msec — IC204 ⑬ (TP202) REC/PB |
| I | ② 3.8Vp-p, 7.2μsec — IC210 ④ (TP214) REC/PB | ⑩ 5Vp-p, 160μsec — IC204 ⑬ (TP202) CUE |
| J | ③ 5.2Vp-p, 1.62msec — IC204 ⑰ (TP204) REC/PB | ⑪ 5Vp-p, 220μsec — IC204 ⑬ (TP202) REV |
| K | ④ 5.2Vp-p, 2V — IC204 ⑮ (TP203) REC/PB | ⑫ 0.52Vp-p, 10μsec — Q709 E (TP235) REC/PB |
| L | ⑤ 5.4Vp-p, 2V — IC204 ㉑ REC/PB | ⑬ 5.2Vp-p, V — IC204 ㊺ PB |
| M | ⑥ 4.2Vp-p, V — IC210 ⑱ (TP219) REC/PB | ⑭ 4.8Vp-p, V — IC701 ㉒ PB |
| N | ⑦ 4.8Vp-p, V — IC210 ⑲ REC | ⑮ 1.65Vp-p, 5.94MHz — IC205 ㉙ REC/PB |
| | ⑧ 4Vp-p, 1.46msec — IC210 ㉓ (TP218) REC/PB | ⑯ 5.3Vp-p, 230KHz — IC204 ㊴ REC/PB |
| O | | ⑰ 4Vp-p, V — Q714 Ⓑ MULTI PCM REC |
| P | | ⑱ 2.1Vp-p, V — Q711 Ⓔ MULTI PCM REC |

**Note:**

- ○— : indicates a lead wire mounted on the component side.
- ●— : indicates a lead wire mounted on the printed side.
- ⊗ : Through hole.
- : Pattern from the side which enables seeing.
- : Pattern of the rear side.
- : B+ pattern from the side which enables seeing.

- Digital transistor (RS-17:Q001,002,003) transistor with resistors. Refer to the RS-17 board schematic diagram for digital transistor.

When indicating parts by reference number, please include the board name.

**Caution:**
Parts face side: (Component Side) Parts on the parts face side seen from the parts face are indicated.

RS-17 BOARD

| | |
|---|---|
| IC001 | A-5 |
| IC002 | B-7 |
| PH001 | C-1 |
| PH002 | C-6 |
| PH003 | B-3 |
| Q001 | B-2 |
| Q002 | B-5 |
| Q003 | B-2 |
| Q004 | A-6 |
| Q005 | A-6 |

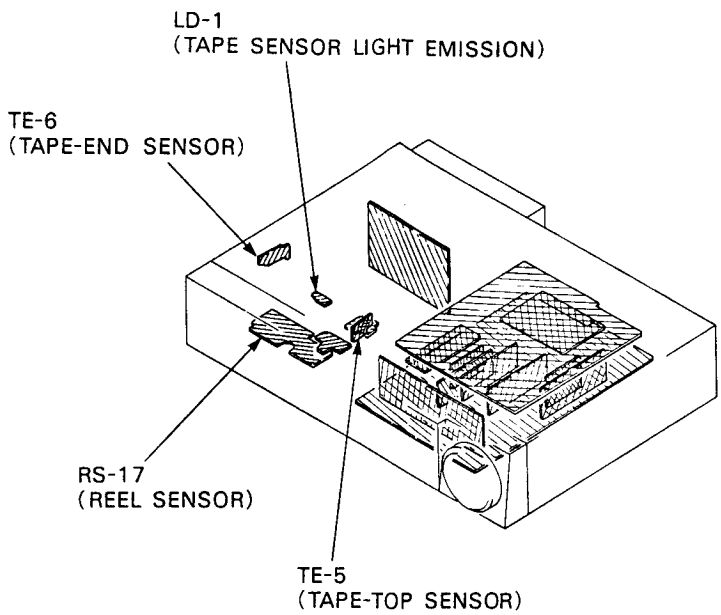

RS-17 BOARD

| | |
|---|---|
| IC001 | A-5 |
| IC002 | B-7 |
| PH001 | C-1 |
| PH002 | C-6 |
| PH003 | B-3 |
| Q001 | B-2 |
| Q002 | B-5 |
| Q003 | B-2 |
| Q004 | A-6 |
| Q005 | A-6 |

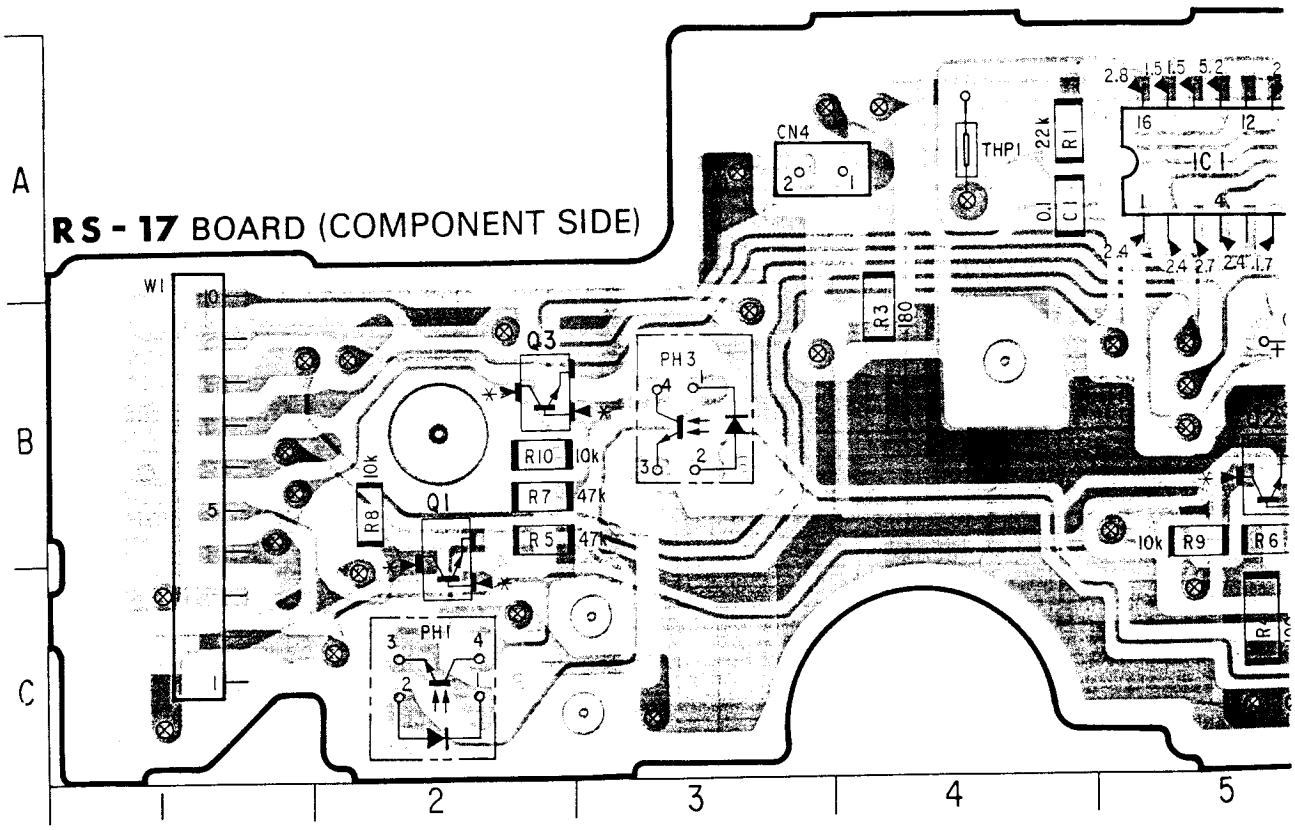

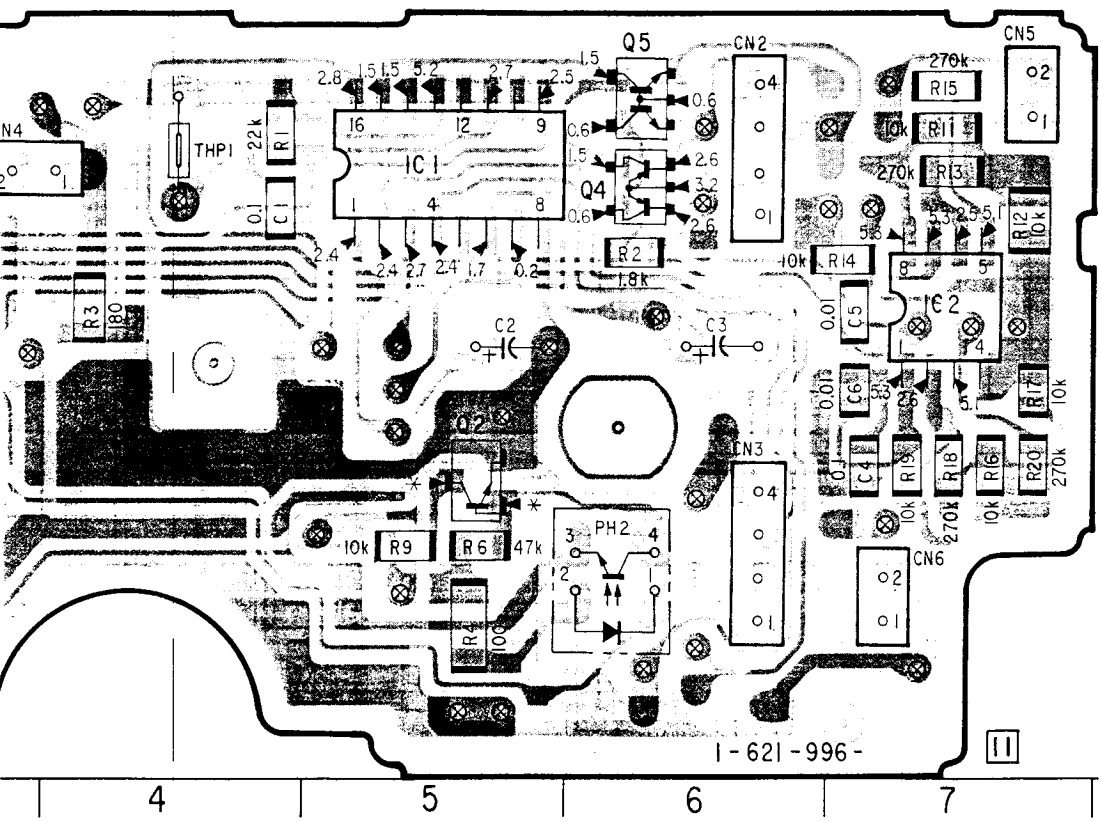


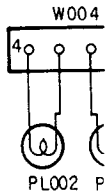


TO RS-17
BOARD
CN004

no mark: LP REC/PB mode
Marked * is not be able to measure the voltage of its position

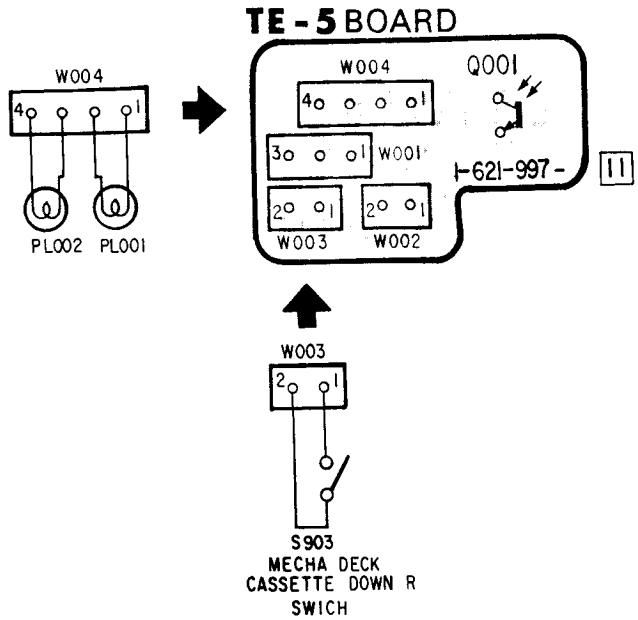


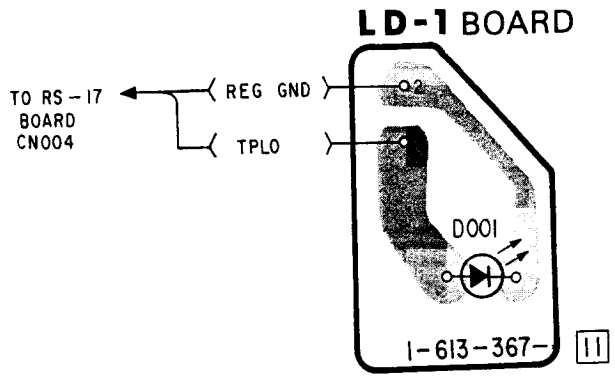


no mark: LP REC/PB mode
Marked * is not be able to measure the voltage of its position

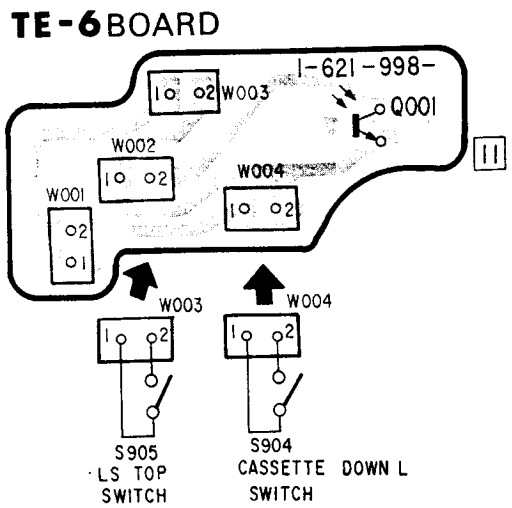

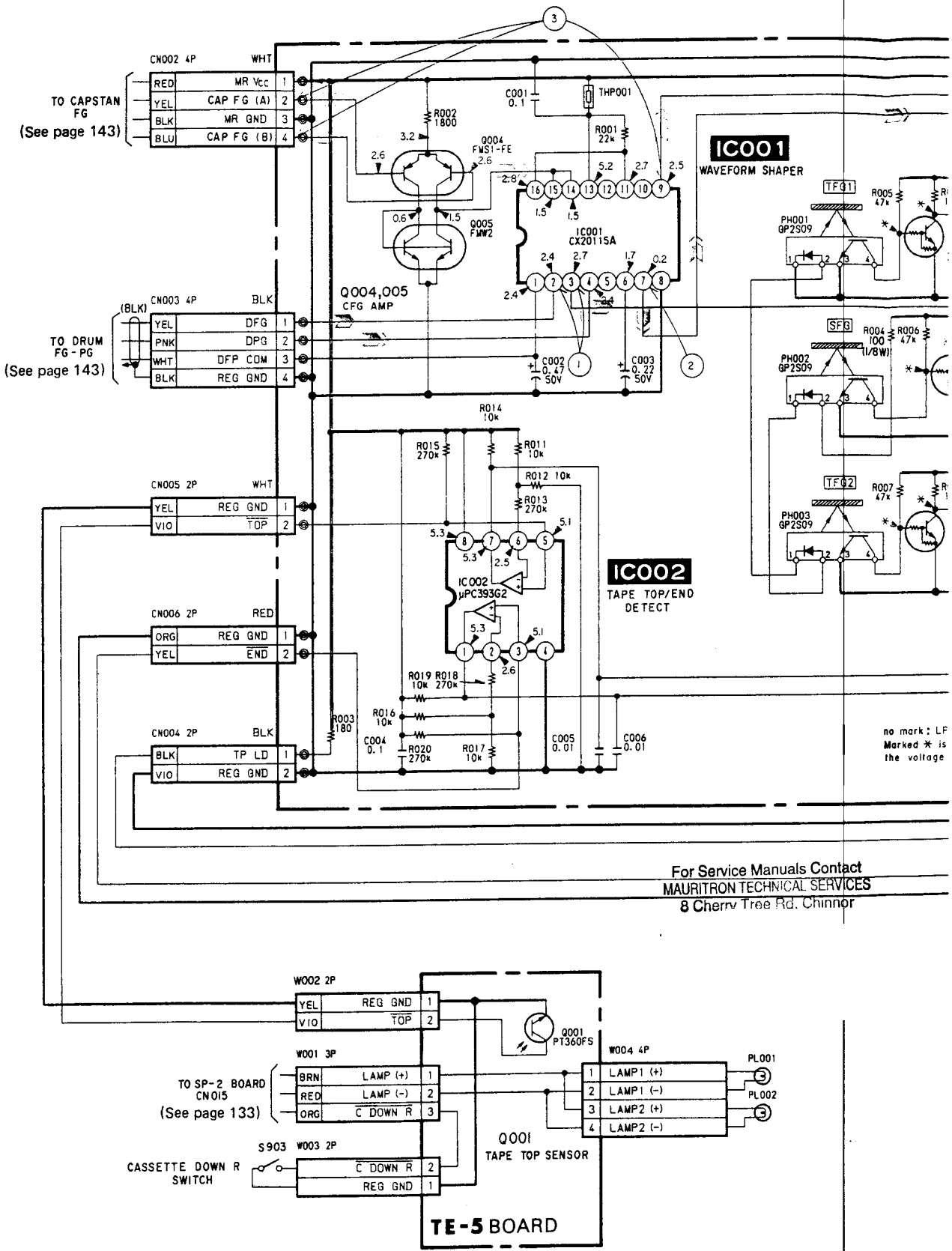


For Service Manuals Contact
MAURITRON TECHNICAL SERVICES
8 Cherry Tree Rd. Chinnor

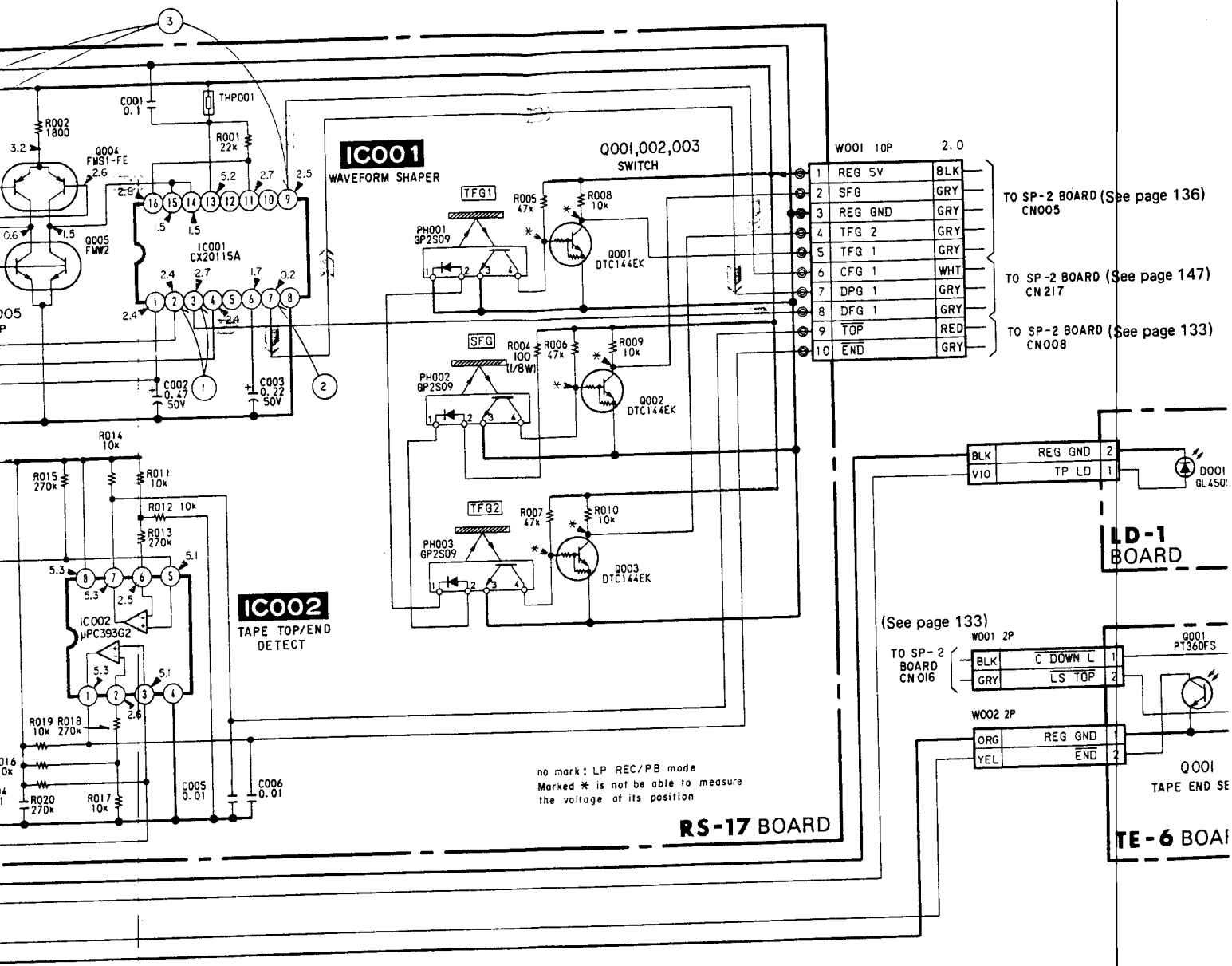
IC001
WAVEFORM SHAPER
Q001,002,003
SWITCH
IC002
TAPE TOP/END
DETECT
W001 10P
1 REG 5V BLK
2 SFG GRY
3 REG GND GRY
4 TFG 2 GRY
5 TFG 1 GRY
6 CFG 1 WHT
7 DPG 1 GRY
8 DFG 1 GRY
9 TOP RED
10 END GRY
TO SP-2 BOARD (See page 136) CN005
TO SP-2 BOARD (See page 147) CN217
TO SP-2 BOARD (See page 133) CN008
BLK REG GND 2
VIO TP LD 1
LD-1 BOARD
(See page 133)
TO SP-2 BOARD CN016
W001 2P
BLK C DOWN L 1
GRY LS TOP 2
W002 2P
ORG REG GND 1
YEL END 2
Q001 PT360FS
TAPE END SE
TE-6 BOAI
no mark: LP REC/PB mode
Marked * is not be able to measure the voltage of its position
RS-17 BOARD

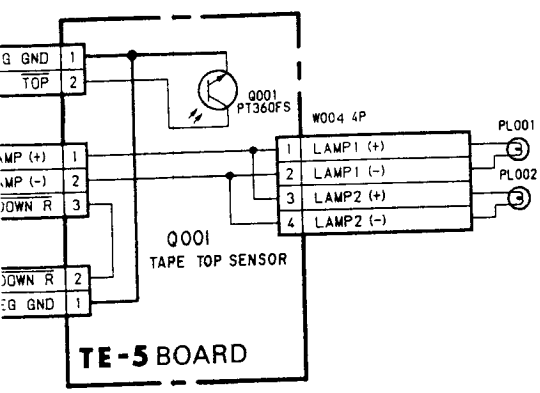
G GND 1
TOP 2
Q001 PT360FS
W004 4P
1 LAMP1 (+)
2 LAMP1 (-)
3 LAMP2 (+)
4 LAMP2 (-)
PL001
PL002
Q001
TAPE TOP SENSOR
TE-5 BOARD

10 | 11 | 12 | 13 | 14 | 15

A B C D E F G H I J

W001 10P 2.0

| | | |
|---|---|---|
| 1 | REG 5V | BLK |
| 2 | SFG | GRY |
| 3 | REG GND | GRY |
| 4 | TFG 2 | GRY |
| 5 | TFG 1 | GRY |
| 6 | CFG 1 | WHT |
| 7 | DPG 1 | GRY |
| 8 | DFG 1 | GRY |
| 9 | TOP | RED |
| 10 | END | GRY |

TO SP-2 BOARD (See page 136) CN005

TO SP-2 BOARD (See page 147) CN217

TO SP-2 BOARD (See page 133) CN008

BLK REG GND 2
VIO TP LD 1
D001 GL450S

**LD-1** BOARD

(See page 133)

TO SP-2 BOARD CN016

W001 2P
BLK C DOWN L 1
GRY LS TOP 2

Q001 PT360FS

W004 2P
1 C DOWN L
2 REG GND
S904
CASSETTE DOWN L SWITCH

W003 2P
1 LS TOP
2 REG GND
S906
LS TOP SWITCH

W002 2P
ORG REG GND 1
YEL END 2

Q001
TAPE END SENSOR

**TE-6** BOARD

RD

**IC001 CX20115A**

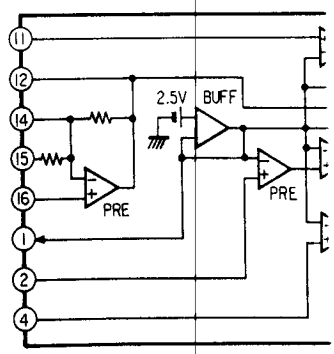


**RS-17** BOARD

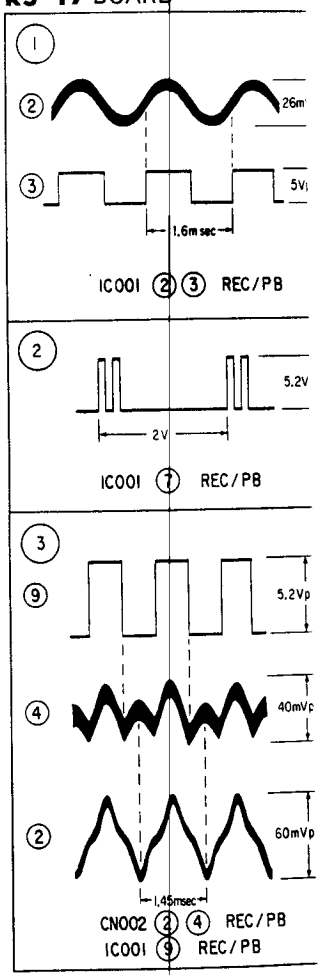

## IC001 CX20115A

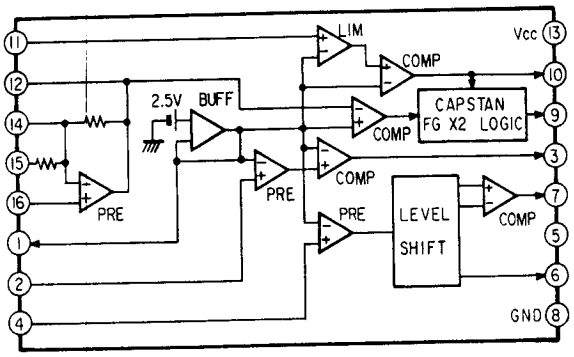


## RS-17 BOARD

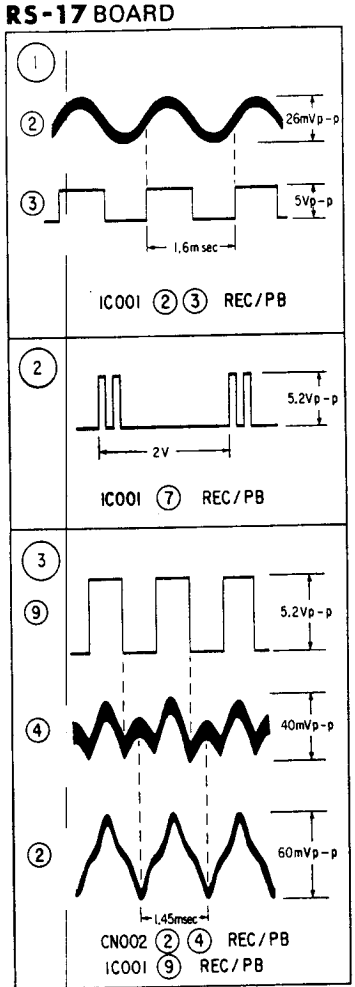


**Note:**

- Caution when replacing chip parts.
  New parts must be attached after removal of chip.
  Be careful not to heat the minus side of tantalum capacitor, because it is damaged by the heat.
- All resistors are in ohms, 1/10W unless otherwise noted.
  kΩ: 1000Ω, MΩ: 1000kΩ.
- All capacitors are in μF unless otherwise noted. pF : μμF.
  50V or less are not indicated except for electrolytice. and tantalums.
- All variable and adjustable resistors have characteristic curve B, unless otherwise noted.
- ——— : B + bus.
- Voltages are dc with respect to ground unless otherwise noted.
- Readings are taken with a colour-bar signal input.
- Readings are taken with a digital multimeter (DC10MΩ).
- Voltage variations may be noted due to normal production tolerances.

When indicating parts by reference number, please include the board name.

- **Signal path**

| | REC | REC/PB | PB |
|---|---|---|---|
| Drum speed servo | | ⊃ | |
| Drum phase servo | | ⊃› | |
| Capstan servo (speed and phase) | | ⊃›› | |

replacing chip parts.
t be attached after removal of chip.
t to heat the minus side of tantalum capacitor,
maged by the heat.
e in ohms, 1/10W unless otherwise noted.
Ω: 1000kΩ.
are in μF unless otherwise noted. pF : μμF.
not indicated except for electrolytice. and

d adjustable resistors have characteristic curve B,
e noted.

with respect to ground unless otherwise noted.
ken with a colour-bar signal input.
ken with a digital multimeter (DC10MΩ).
ons may be noted due to normal production

parts by refer-
please include

| | REC | REC/PB | PB |
|---|---|---|---|
| | | ⇒ | |
| | | ⇒ | |
| eed and phase) | | ⇒ | |

**Note:**

- ○— : indicates a lead wire mounted on the component side.
- ●— : indicates a lead wire mounted on the printed side.
- ⊗ : Through hole.
- : Pattern from the side which enables seeing.
- : Pattern of the rear side.
- : B+ pattern from the side which enables seeing.

When indicating parts by reference number, please include the board name.

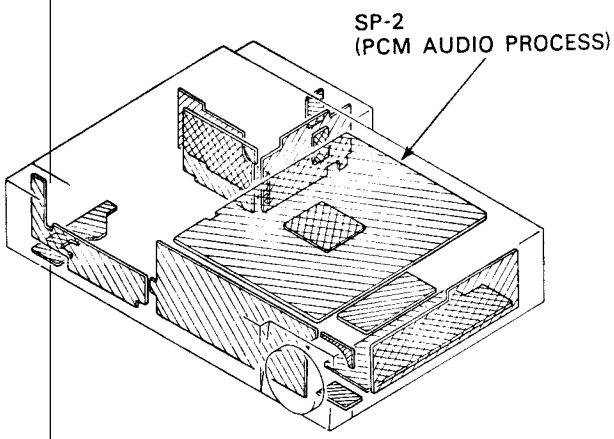


| | |
|---|---|
| D025 | A-5 |
| D021 | A-28 |
| D060 | C-4 |
| D080 | K-15 |
| D081 | G-17 |
| D082 | G-16 |
| D106 | C-16 |
| D107 | B-16 |
| D108 | B-16 |
| D120 | C-16 |
| D203 | B-2 |
| D204 | F-26 |
| D205 | B-7 |
| D206 | D-7 |
| D208 | H-24 |
| D209 | I-26 |
| D211 | K-27 |
| D212 | L-3 |
| D213 | I-22 |
| D214 | J-30 |
| D215 | D-27 |
| D216 | C-6 |
| D217 | I-24 |
| D218 | K-30 |
| D220 | B-1 |
| D221 | B-1 |
| D222 | B-2 |
| D223 | G-6 |
| D225 | I-6 |
| D226 | K-30 |
| D227 | H-11 |
| D230 | D-31 |
| D231 | F-7 |
| D232 | K-7 |
| D233 | E-27 |
| D390 | F-27 |
| D391 | J-14 |
| D392 | I-10 |
| D393 | I-10 |
| D501 | F-11 |
| D502 | H-13 |
| D600 | B-13 |
| D601 | H-14 |
| D603 | I-14 |
| D604 | H-14 |
| D701 | K-5 |
| D702 | K-23 |

| | |
|---|---|
| IC001 | H-30 |
| IC002 | F-31 |
| IC003 | C-23 |
| IC004 | F-29 |
| IC005 | F-28 |
| IC007 | C-29 |
| IC008 | D-29 |
| IC009 | D-30 |
| IC010 | L-18 |
| IC011 | H-17 |
| IC012 | J-17 |
| IC120 | K-17 |
| IC121 | L-17 |
| IC201 | E-26 |
| IC202 | J-1 |
| IC204 | H-23 |
| IC205 | K-21 |
| IC206 | D-32 |
| IC207 | B-30 |
| IC208 | B-32 |
| IC209 | B-26 |
| IC210 | K-7 |
| IC211 | I-5 |
| IC212 | J-5 |
| IC213 | K-3 |
| IC214 | J-2 |
| IC215 | J-2 |
| IC216 | H-7 |
| IC217 | E-8 |
| IC218 | F-6 |
| IC219 | E-25 |
| IC220 | F-27 |
| IC500 | E-23 |
| IC501 | C-22 |
| IC502 | J-15 |
| IC600 | B-19 |
| IC601 | H-20 |
| IC602 | E-20 |
| IC603 | F-20 |
| IC604 | D-14 |
| IC605 | E-18 |
| IC606 | H-18 |
| IC701 | K-5 |
| IC703 | L-30 |

| | |
|---|---|
| Q010 | I-3 |
| Q011 | H-31 |
| Q012 | H-31 |
| Q013 | G-3 |
| Q014 | D-10 |
| Q015 | D-10 |
| Q020 | B-5 |
| Q021 | B-28 |
| Q022 | B-28 |
| Q023 | B-5 |
| Q054 | I-22 |
| Q055 | I-22 |
| Q060 | F-3 |
| Q070 | B-9 |
| Q071 | B-24 |
| Q080 | K-15 |
| Q081 | K-18 |
| Q082 | J-16 |
| Q083 | H-17 |
| Q084 | H-16 |
| Q085 | G-16 |
| Q086 | H-16 |
| Q087 | E-17 |
| Q088 | F-16 |
| Q090 | D-23 |
| Q091 | D-24 |
| Q103 | B-16 |
| Q120 | K-16 |
| Q121 | C-17 |
| Q122 | D-16 |
| Q123 | K-16 |
| Q201 | B-5 |
| Q202 | B-28 |
| Q203 | B-27 |
| Q204 | B-6 |
| Q205 | K-26 |
| Q206 | C-30 |
| Q207 | C-2 |
| Q208 | D-32 |
| Q209 | D-30 |
| Q210 | H-11 |
| Q211 | K-4 |
| Q212 | A-26 |
| Q213 | B-7 |
| Q214 | C-7 |
| Q215 | C-7 |
| Q216 | C-6 |
| Q217 | D-6 |
| Q218 | C-26 |
| Q219 | C-27 |
| Q220 | C-7 |
| Q221 | B-6 |
| Q222 | C-26 |
| Q223 | C-7 |
| Q224 | C-27 |
| Q225 | D-6 |
| Q226 | K-9 |
| Q227 | K-10 |
| Q228 | J-6 |
| Q229 | F-3 |
| Q230 | F-4 |
| Q232 | K-23 |
| Q233 | K-30 |
| Q235 | H-11 |
| Q236 | I-6 |
| Q237 | C-9 |
| Q238 | G-3 |
| Q239 | F-26 |
| Q240 | E-26 |
| Q242 | K-12 |
| Q243 | F-25 |
| Q244 | F-7 |
| Q245 | K-3 |
| Q246 | H-28 |
| Q248 | I-31 |
| Q249 | K-31 |
| Q250 | K-31 |
| Q251 | L-31 |
| Q252 | L-30 |
| Q253 | L-3 |
| Q254 | K-31 |
| Q256 | K-4 |
| Q257 | H-6 |
| Q258 | G-6 |
| Q260 | B-1 |
| Q261 | B-1 |
| Q262 | B-2 |
| Q263 | H-10 |
| Q264 | I-10 |
| Q280 | C-31 |
| Q281 | D-2 |
| Q282 | D-2 |
| Q390 | J-14 |

| | |
|---|---|
| Q401 | L-4 |
| Q500 | F-10 |
| Q501 | F-10 |
| Q502 | F-9 |
| Q601 | C-13 |
| Q602 | C-14 |
| Q604 | B-14 |
| Q605 | B-21 |
| Q606 | J-18 |
| Q701 | L-9 |
| Q702 | L-9 |
| Q703 | L-9 |
| Q704 | M-24 |
| Q705 | K-23 |
| Q706 | K-24 |
| Q707 | L-9 |
| Q708 | L-10 |
| Q709 | L-25 |
| Q710 | M-21 |
| Q711 | L-10 |
| Q712 | K-11 |
| Q713 | L-10 |
| Q714 | L-23 |
| Q715 | L-22 |
| Q716 | M-10 |
| Q717 | K-10 |

| | |
|---|---|
| RV201 | J-26 |
| RV202 | J-26 |
| RV203 | J-26 |
| RV204 | J-26 |
| RV205 | L-32 |
| RV206 | K-31 |
| RV207 | L-31 |
| RV208 | L-32 |
| RV209 | D-25 |
| RV210 | M-29 |
| RV212 | G-25 |
| RV215 | K-25 |
| RV216 | K-25 |
| RV217 | G-27 |
| RV218 | G-26 |
| RV601 | B-20 |
| RV602 | F-18 |
| RV603 | C-21 |
| RV604 | B-21 |
| RV701 | M-27 |

| | |
|---|---|
| TP001 | G-29 |
| TP002 | I-30 |
| TP003 | E-32 |
| TP004 | G-29 |
| TP005 | G-29 |
| TP201 | I-23 |
| TP202 | G-24 |
| TP203 | G-22 |
| TP204 | G-22 |
| TP205 | G-22 |
| TP206 | J-21 |
| TP207 | G-24 |
| TP208 | K-29 |
| TP209 | L-22 |
| TP210 | B-27 |
| TP211 | B-27 |
| TP212 | J-27 |
| TP213 | K-28 |
| TP214 | K-25 |
| TP215 | J-24 |
| TP216 | K-26 |
| TP217 | K-26 |
| TP219 | M-26 |
| TP220 | I-30 |
| TP221 | L-27 |
| TP222 | J-29 |
| TP223 | L-26 |
| TP224 | J-23 |
| TP225 | E-27 |
| TP226 | G-24 |
| TP227 | L-27 |
| TP228 | I-30 |
| TP229 | G-28 |
| TP230 | M-26 |
| TP231 | L-21 |
| TP232 | C-32 |
| TP233 | C-31 |
| TP234 | C-31 |
| TP235 | L-25 |
| TP236 | M-30 |
| TP237 | I-32 |
| TP238 | E-25 |
| TP239 | J-31 |
| TP240 | K-27 |
| TP241 | E-26 |
| TP242 | E-26 |
| TP603 | G-20 |
| TP604 | D-18 |
| TP607 | G-22 |
| TP608 | C-21 |
| TP609 | E-18 |

omponent side.
rinted side.

ing.

seeing.

I AUDIO PROCESS)

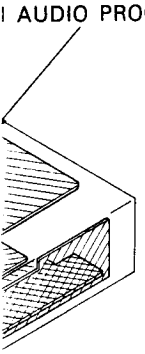

## SP-2(PCM AUDIO PROCESS) PRINTED

—Ref. No. SP-2 BOARD : 4,000 series—

| | | | | | | | |
|---|---|---|---|---|---|---|---|
| D025 | A-5 | Q010 | I-3 | Q401 | L-4 | TP242 | E-26 |
| D021 | A-28 | Q011 | H-31 | Q500 | F-10 | TP603 | G-20 |
| D060 | C-4 | Q012 | H-31 | Q501 | F-10 | TP604 | D-18 |
| D080 | K-15 | Q013 | G-3 | Q502 | F-9 | TP607 | G-22 |
| D081 | G-17 | Q014 | D-10 | Q601 | C-13 | TP608 | C-21 |
| D082 | G-16 | Q015 | D-10 | Q602 | C-14 | TP609 | E-18 |
| D106 | C-16 | Q020 | B-5 | Q604 | B-14 | | |
| D107 | B-16 | Q021 | B-28 | Q605 | B-21 | | |
| D108 | B-16 | Q022 | B-28 | Q606 | J-18 | | |
| D120 | C-16 | Q023 | B-5 | Q701 | L-9 | | |
| D203 | B-2 | Q054 | I-22 | Q702 | L-9 | | |
| D204 | F-26 | Q055 | I-22 | Q703 | L-9 | | |
| D205 | B-7 | Q060 | F-3 | Q704 | M-24 | | |
| D206 | D-7 | Q070 | B-9 | Q705 | K-23 | | |
| D208 | H-24 | Q071 | B-24 | Q706 | K-24 | | |
| D209 | I-26 | Q080 | K-15 | Q707 | L-9 | | |
| D211 | K-27 | Q081 | K-18 | Q708 | L-10 | | |
| D212 | L-3 | Q082 | J-16 | Q709 | L-25 | | |
| D213 | I-22 | Q083 | H-17 | Q710 | M-21 | | |
| D214 | J-30 | Q084 | H-16 | Q711 | L-10 | | |
| D215 | D-27 | Q085 | G-16 | Q712 | K-11 | | |
| D216 | C-6 | Q086 | H-16 | Q713 | L-10 | | |
| D217 | I-24 | Q087 | E-17 | Q714 | L-23 | | |
| D218 | K-30 | Q088 | F-16 | Q715 | L-22 | | |
| D220 | B-1 | Q090 | D-23 | Q716 | M-10 | | |
| D221 | B-1 | Q091 | D-24 | Q717 | K-10 | | |
| D222 | B-2 | Q103 | B-16 | | | | |
| D223 | G-6 | Q120 | K-16 | RV201 | J-26 | | |
| D225 | I-6 | Q121 | C-17 | RV202 | J-26 | | |
| D226 | K-30 | Q122 | D-16 | RV203 | J-26 | | |
| D227 | H-11 | Q123 | K-16 | RV204 | J-26 | | |
| D230 | D-31 | Q201 | B-5 | RV205 | L-32 | | |
| D231 | F-7 | Q202 | B-28 | RV206 | K-31 | | |
| D232 | K-7 | Q203 | B-27 | RV207 | L-31 | | |
| D233 | E-27 | Q204 | B-6 | RV208 | L-32 | | |
| D390 | F-27 | Q205 | K-26 | RV209 | D-25 | | |
| D391 | J-14 | Q206 | C-30 | RV210 | M-29 | | |
| D392 | I-10 | Q207 | C-2 | RV212 | G-25 | | |
| D393 | I-10 | Q208 | D-32 | RV215 | K-25 | | |
| D501 | F-11 | Q209 | D-30 | RV216 | K-25 | | |
| D502 | H-13 | Q210 | H-11 | RV217 | G-27 | | |
| D600 | B-13 | Q211 | K-4 | RV218 | G-26 | | |
| D601 | H-14 | Q212 | A-26 | RV601 | B-20 | | |
| D603 | I-14 | Q213 | B-7 | RV602 | F-18 | | |
| D604 | H-14 | Q214 | C-7 | RV603 | C-21 | | |
| D701 | K-5 | Q215 | C-7 | RV604 | B-21 | | |
| D702 | K-23 | Q216 | C-6 | RV701 | M-27 | | |
| | | Q217 | D-6 | | | | |
| IC001 | H-30 | Q218 | C-26 | TP001 | G-29 | | |
| IC002 | F-31 | Q219 | C-27 | TP002 | I-30 | | |
| IC003 | C-23 | Q220 | C-7 | TP003 | E-32 | | |
| IC004 | F-29 | Q221 | B-6 | TP004 | G-29 | | |
| IC005 | F-28 | Q222 | C-26 | TP005 | G-29 | | |
| IC007 | C-29 | Q223 | C-7 | TP201 | I-23 | | |
| IC008 | D-29 | Q224 | C-27 | TP202 | G-24 | | |
| IC009 | D-30 | Q225 | D-6 | TP203 | G-22 | | |
| IC010 | L-18 | Q226 | K-9 | TP204 | G-22 | | |
| IC011 | H-17 | Q227 | K-10 | TP205 | G-22 | | |
| IC012 | J-17 | Q228 | J-6 | TP206 | J-21 | | |
| IC120 | K-17 | Q229 | F-3 | TP207 | G-24 | | |
| IC121 | L-17 | Q230 | F-4 | TP208 | K-29 | | |
| IC201 | E-26 | Q232 | K-23 | TP209 | L-22 | | |
| IC202 | J-1 | Q233 | K-30 | TP210 | B-27 | | |
| IC204 | H-23 | Q235 | H-11 | TP211 | B-27 | | |
| IC205 | K-21 | Q236 | I-6 | TP212 | J-27 | | |
| IC206 | D-32 | Q237 | C-9 | TP213 | K-28 | | |
| IC207 | B-30 | Q238 | G-3 | TP214 | K-25 | | |
| IC208 | B-32 | Q239 | F-26 | TP215 | J-24 | | |
| IC209 | B-26 | Q240 | E-26 | TP216 | K-26 | | |
| IC210 | K-7 | Q242 | K-12 | TP217 | K-26 | | |
| IC211 | I-5 | Q243 | F-25 | TP219 | M-26 | | |
| IC212 | J-5 | Q244 | F-7 | TP220 | I-30 | | |
| IC213 | K-3 | Q245 | K-3 | TP221 | L-27 | | |
| IC214 | J-2 | Q246 | H-28 | TP222 | J-29 | | |
| IC215 | J-2 | Q248 | I-31 | TP223 | L-26 | | |
| IC216 | H-7 | Q249 | K-31 | TP224 | J-23 | | |
| IC217 | E-8 | Q250 | K-31 | TP225 | E-27 | | |
| IC218 | F-6 | Q251 | L-31 | TP226 | G-24 | | |
| IC219 | E-25 | Q252 | L-30 | TP227 | L-27 | | |
| IC220 | F-27 | Q253 | L-3 | TP228 | I-30 | | |
| IC500 | E-23 | Q254 | K-31 | TP229 | G-28 | | |
| IC501 | C-22 | Q256 | K-4 | TP230 | M-26 | | |
| IC502 | J-15 | Q257 | H-6 | TP231 | L-21 | | |
| IC600 | B-19 | Q258 | G-6 | TP232 | C-32 | | |
| IC601 | H-20 | Q260 | B-1 | TP233 | C-31 | | |
| IC602 | E-20 | Q261 | B-1 | TP234 | C-31 | | |
| IC603 | F-20 | Q262 | B-2 | TP235 | L-25 | | |
| IC604 | D-14 | Q263 | H-10 | TP236 | M-30 | | |
| IC605 | E-18 | Q264 | I-10 | TP237 | I-32 | | |
| IC606 | H-18 | Q280 | C-31 | TP238 | E-25 | | |
| IC701 | K-5 | Q281 | D-2 | TP239 | J-31 | | |
| IC703 | L-30 | Q282 | D-2 | TP240 | K-27 | | |
| | | Q390 | J-14 | TP241 | E-26 | | |

**SP-2**BOARD(SOLDER SIDE)

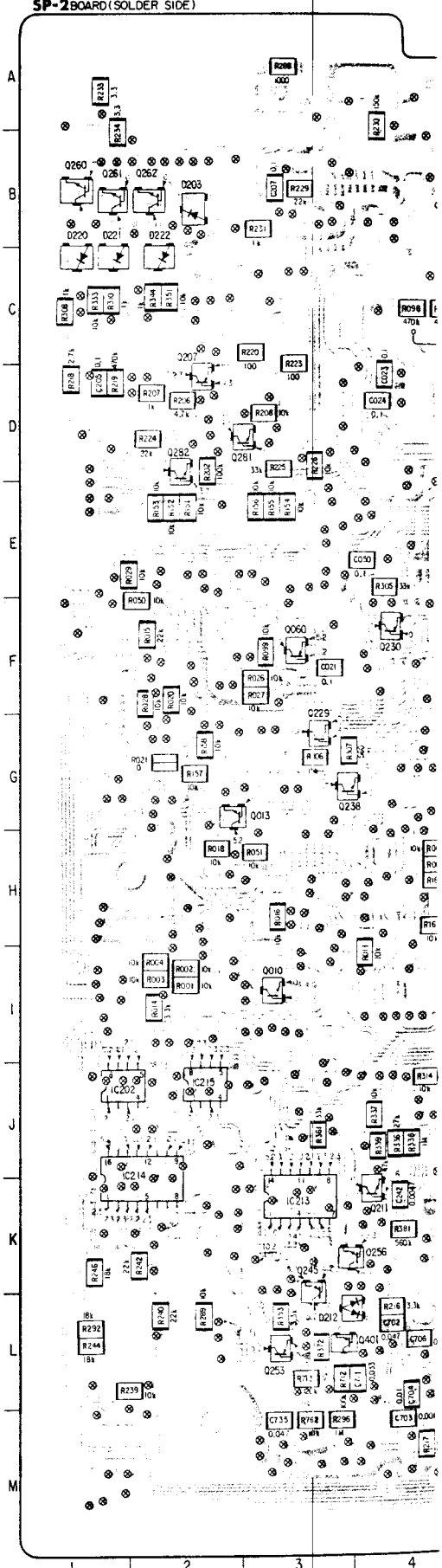

## SP-2(PCM AUDIO PROCESS) PRINTED WIRING BOARD

—Ref. No. SP-2 BOARD : 4,000 series—

| | |
|---|---|
| TP242 | E-26 |
| TP603 | G-20 |
| TP604 | D-18 |
| TP607 | G-22 |
| TP608 | C-21 |
| TP609 | E-18 |

SP-2 BOARD (SOLDER SIDE)

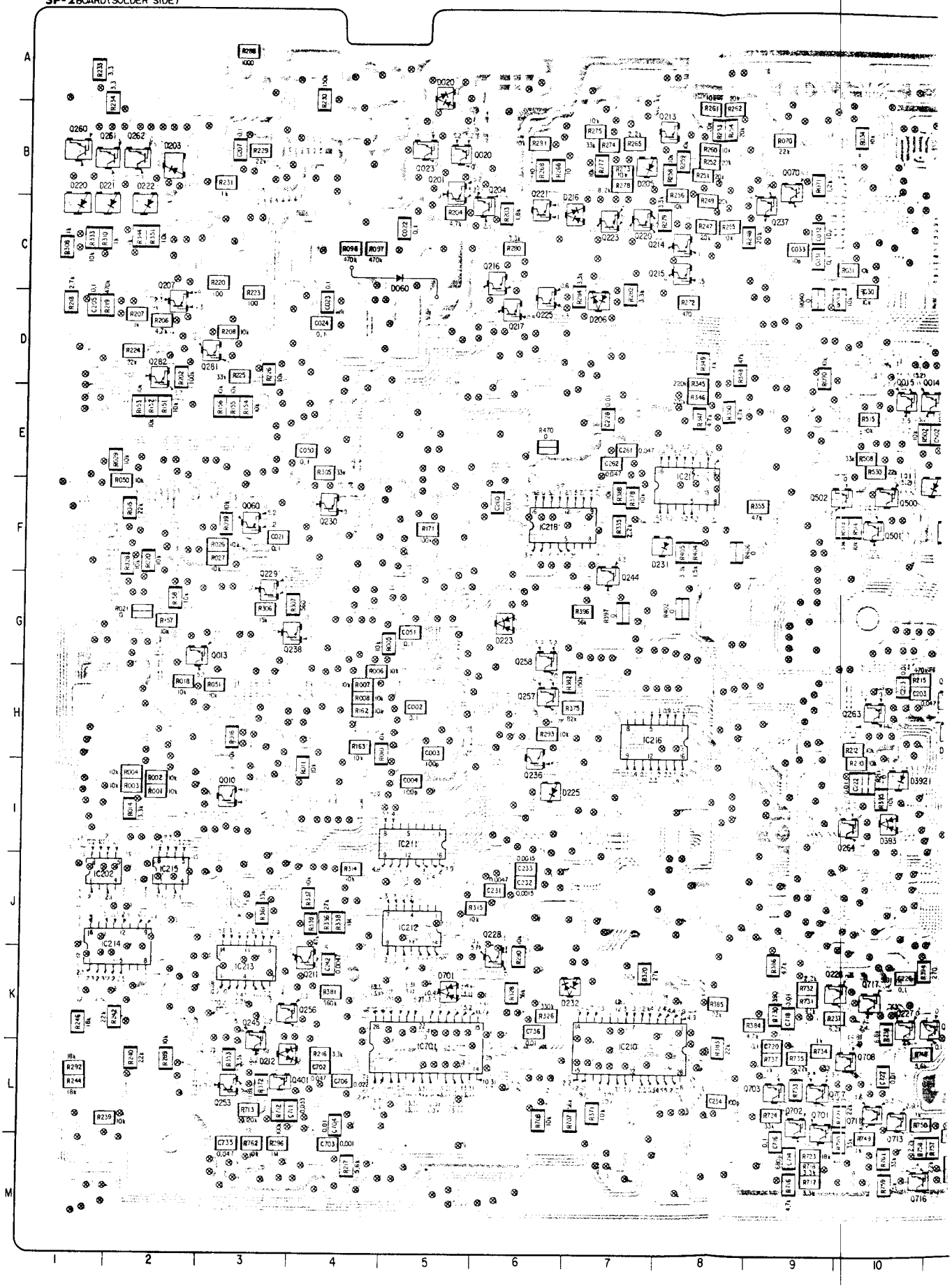

SP-2 BOARD (COMPONENT SIDE)

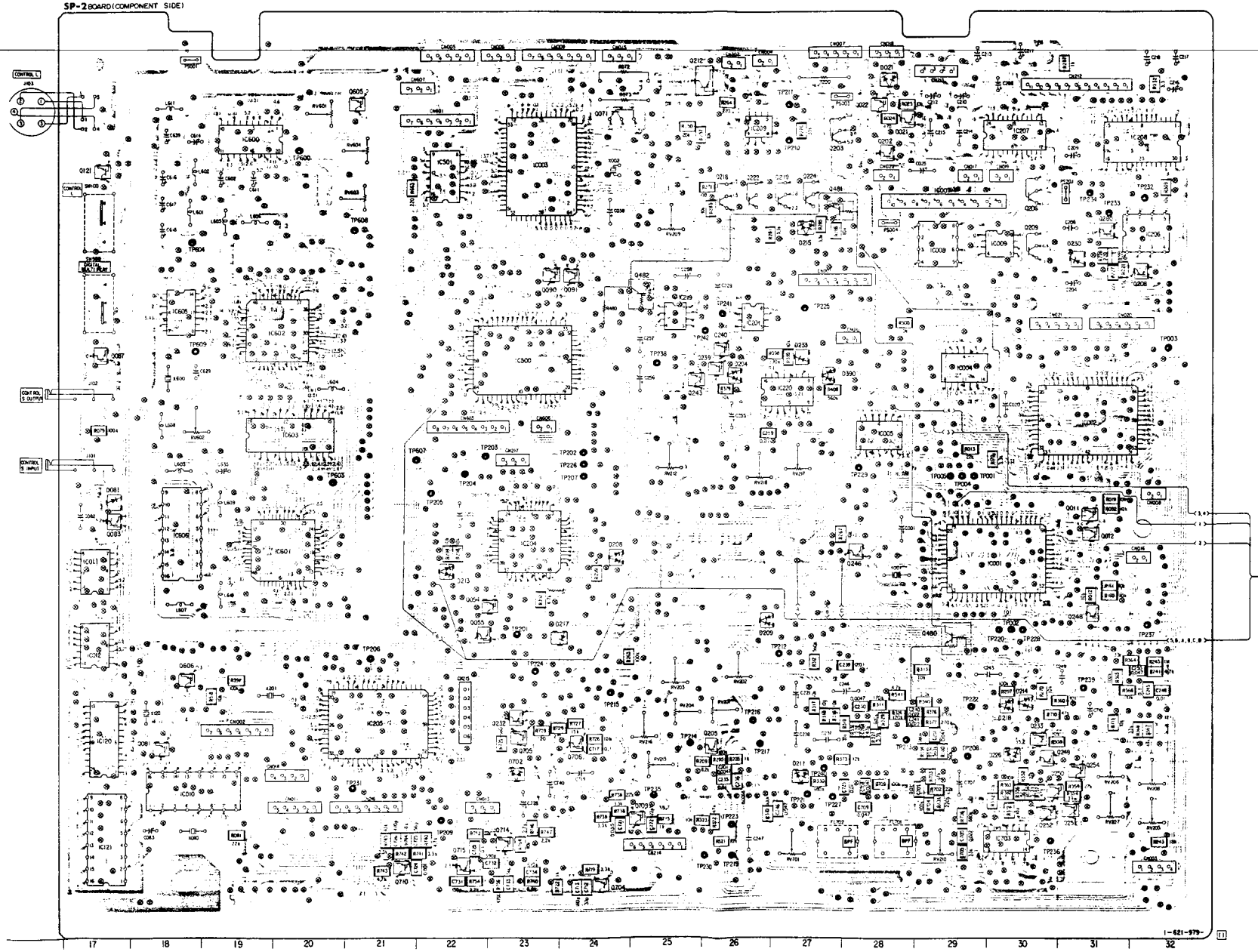

## SP-2(PCM AUDIO PROCESS) SCHEMATIC DIAGRAM

—Ref. No. SP-2 BOARD : 4,000 series—

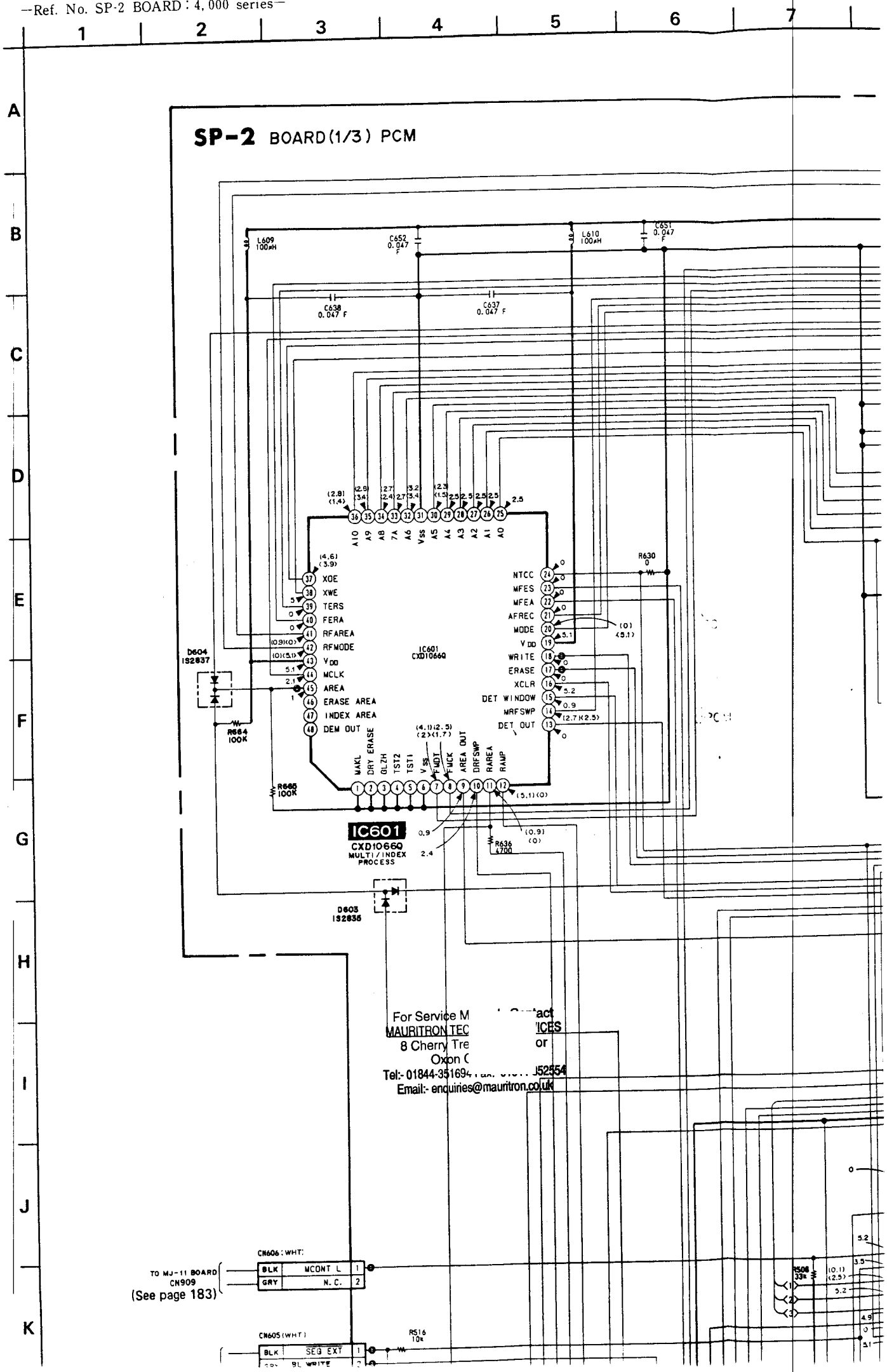


For Service M... Contact
MAURITRON TEC... ICES
8 Cherry Tre... or
Oxon (...
Tel:- 01844-351694 ... 352554
Email:- enquiries@mauritron.co.uk

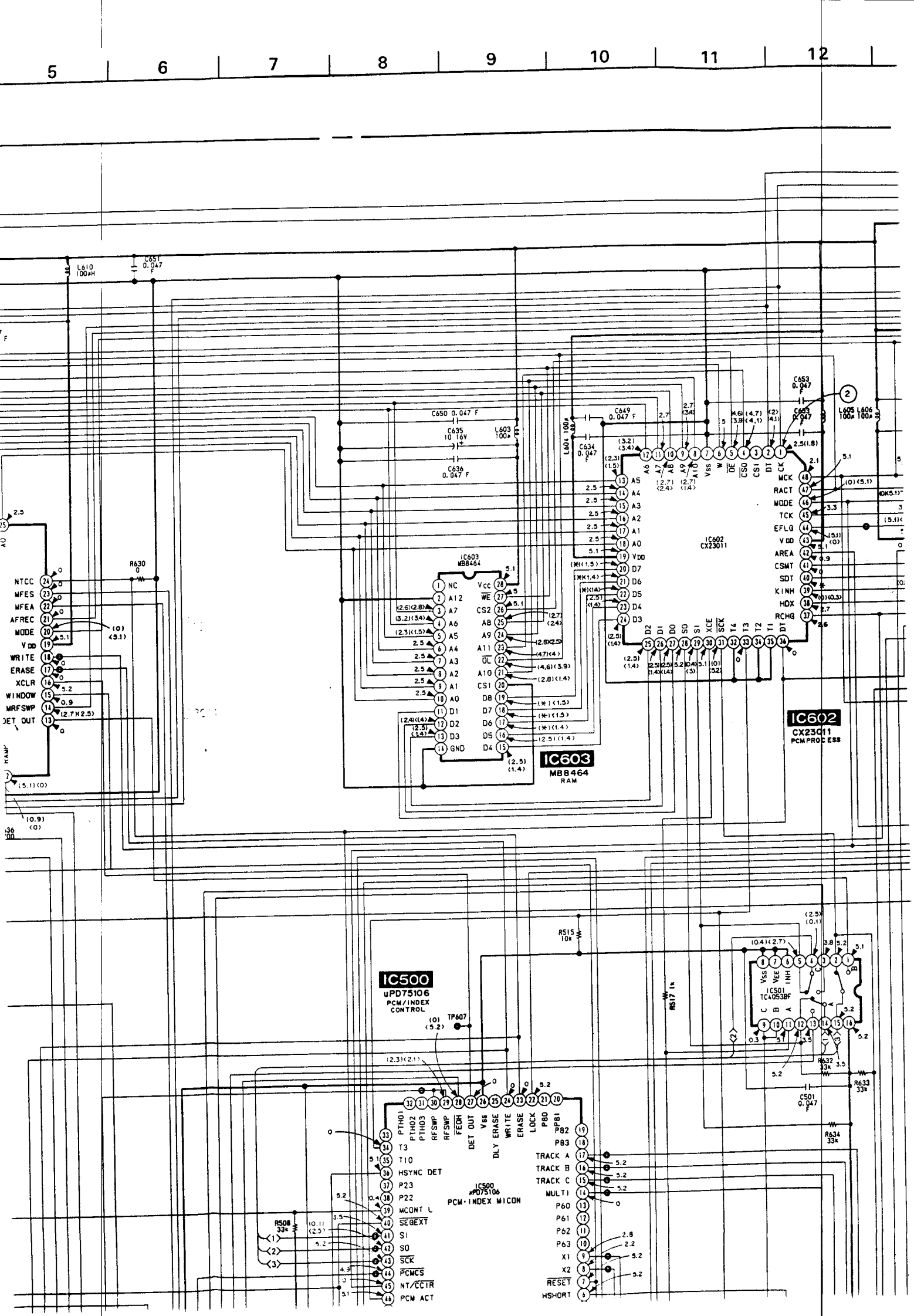
5
6
7
8
9
10
11
12
IC602
CX23011
PCM PROCESS
IC603
MB8464
RAM
IC500
uPD75106
PCM/INDEX
CONTROL
IC501
TC4053BF
IC500
μPD75106
PCM·INDEX MICON
L610
100μH
C651
0.047
F
C650 0.047 F
C635
10 16V
C636
0.047 F
L603
100μ
C649
0.047 F
C634
0.047
C653
0.047
L604 100μ
L605 L606
100μ 100μ
R630
0
R515
10k
R517 1k
R632
33k
R633
33k
R634
33k
C501
0.047
F
R508
33k
TP607
NTCC
MFES
MFEA
AFREC
MODE
VDD
WRITE
ERASE
XCLR
WINDOW
MRFSWP
DET OUT
NC
A12
A7
A6
A5
A4
A3
A2
A1
A0
D1
D2
D3
GND
Vcc
WE
CS2
A8
A9
A11
OE
A10
CS1
D8
D7
D6
D5
D4
A5
A4
A3
A2
A1
A0
VDD
D7
D6
D5
D4
D3
D2
D1
D0
S0
S1
XCE
SCK
T4
T3
T2
T1
DT
A6
A7
A8
A9
A10
Vss
W
OE
CS0
CS1
DT
CK
MCK
RACT
MODE
TCK
EFLG
VDD
AREA
CSMT
SDT
KINH
HDX
RCHG
Vss
VEE
INH
C
B
A
PTH01
PTH02
PTH03
RFSWP
RFSWP
FEOH
DET OUT
Vss
DLY ERASE
WRITE
ERASE
LOCK
P80
P81
P82
P83
TRACK A
TRACK B
TRACK C
MULTI
P60
P61
P62
P63
X1
X2
RESET
HSHORT
T3
T10
HSYNC DET
P23
P22
MCONT L
SEQEXT
SI
SO
SCK
PCMCS
NT/CCTR
PCM ACT

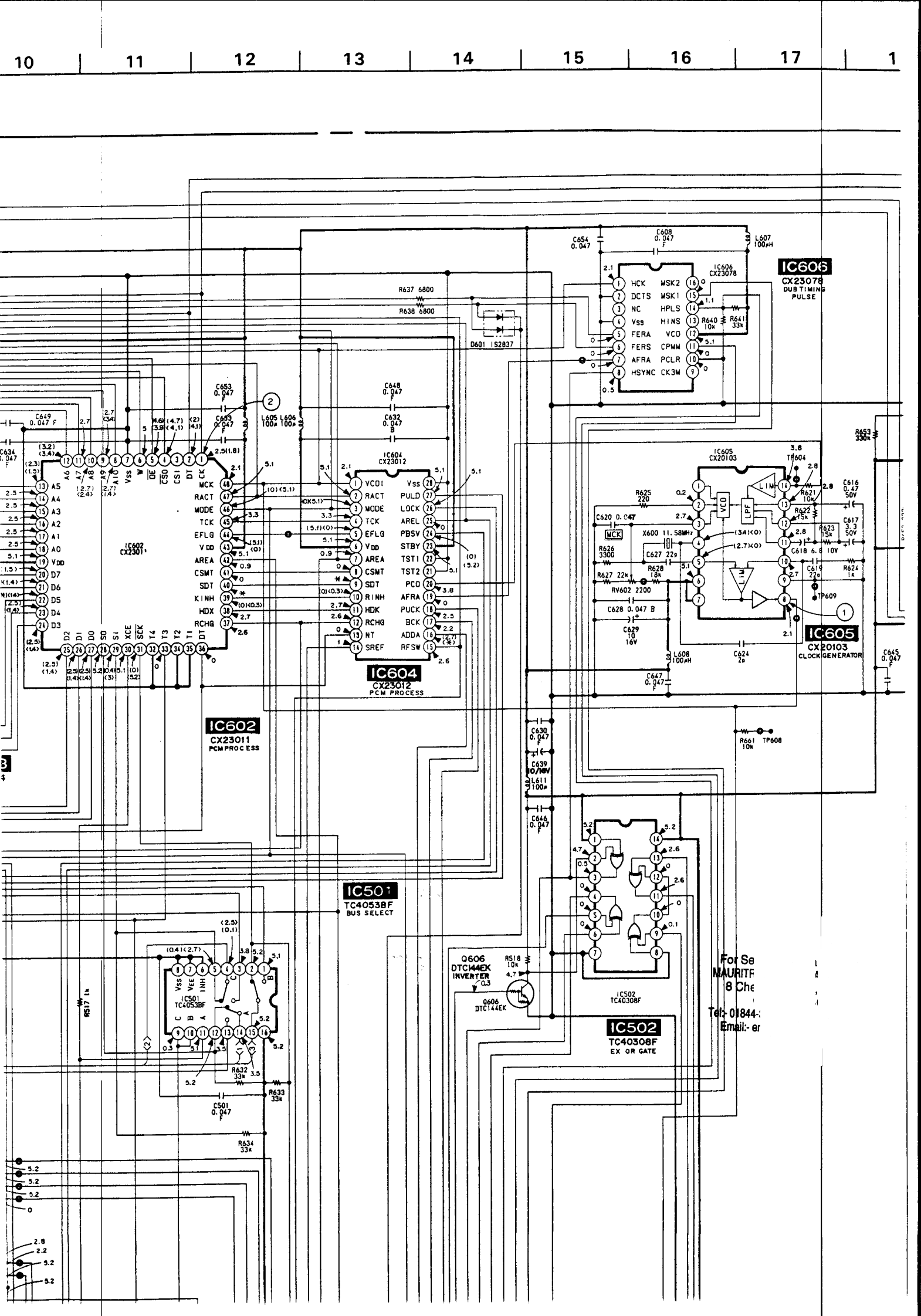
10
11
12
13
14
15
16
17
IC606
CX23078
DUB TIMING PULSE
IC605
CX20103
CLOCK GENERATOR
IC604
CX23012
PCM PROCESS
IC602
CX23011
PCM PROCESS
IC501
TC4053BF
BUS SELECT
IC502
TC40308F
EX OR GATE
Q606
DTC144EK
INVERTER
D601 1S2837
For Se
MAURITF
8 Che
Tel:- 01844-
Email:- er

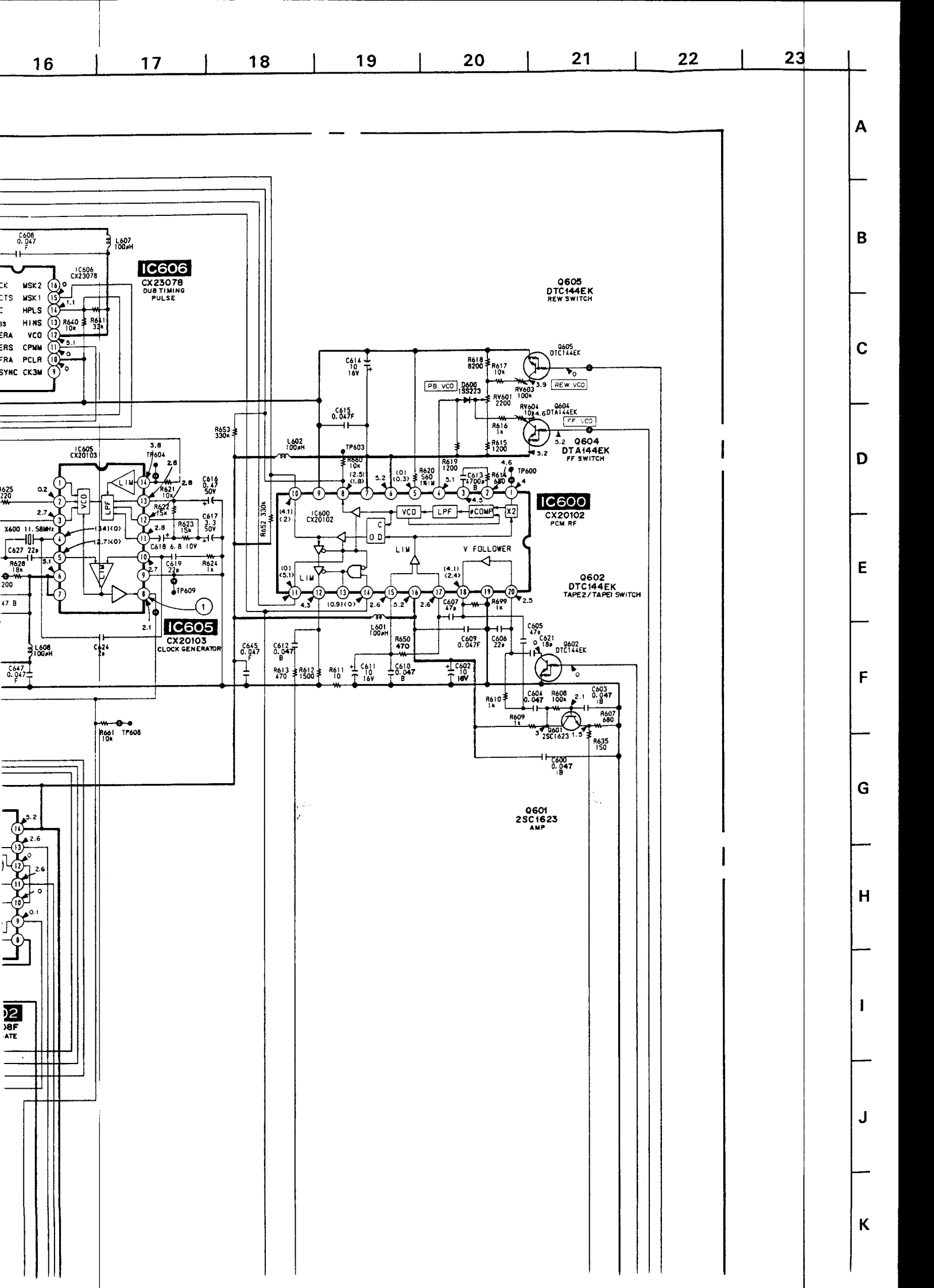
16
17
18
19
20
21
22
23
A
B
C
D
E
F
G
H
I
J
K
IC606
CX23078
DUB TIMING PULSE
IC605
CX20103
CLOCK GENERATOR
IC600
CX20102
PCM RF
Q605
DTC144EK
REW SWITCH
Q604
DTA144EK
FF SWITCH
Q602
DTC144EK
TAPE2/TAPE1 SWITCH
Q601
2SC1623
AMP
VCO
LPF
LIM
V FOLLOWER
PB. VCO
REW VCO
FF VCO
X600 11.58MHz

**Note:**

- Caution when replacing chip parts.
  New parts must be attached after removal of chip.
  Be careful not to heat the minus side of tantalum capacitor, because it is damaged by the heat.
- All resistors are in ohms, 1/10W unless otherwise noted.
  kΩ: 1000Ω, MΩ: 1000kΩ.
- All capacitors are in μF unless otherwise noted. pF : μμF.
  50V or less are not indicated except for electrolytice. and tantalums.
- [ ] : panel designation.
- △ : internal component.
- [ ] : adjustment for repair.
- ▬ : B + bus.
- Voltages are dc with respect to ground unless otherwise noted.
- Readings are taken with a colour-bar signal input.
- Readings are taken with a digital multimeter (DC10MΩ).
- Voltage variations may be noted due to normal production tolerances.

When indicating parts by reference number, please include the board name.

- **Signal path**

**SP-2** BOARD(PCM)

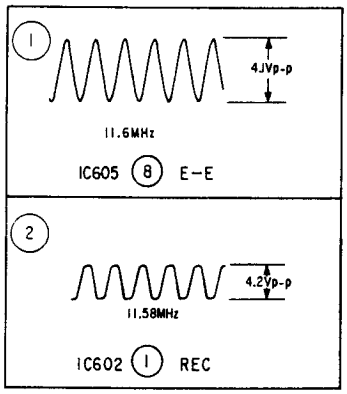

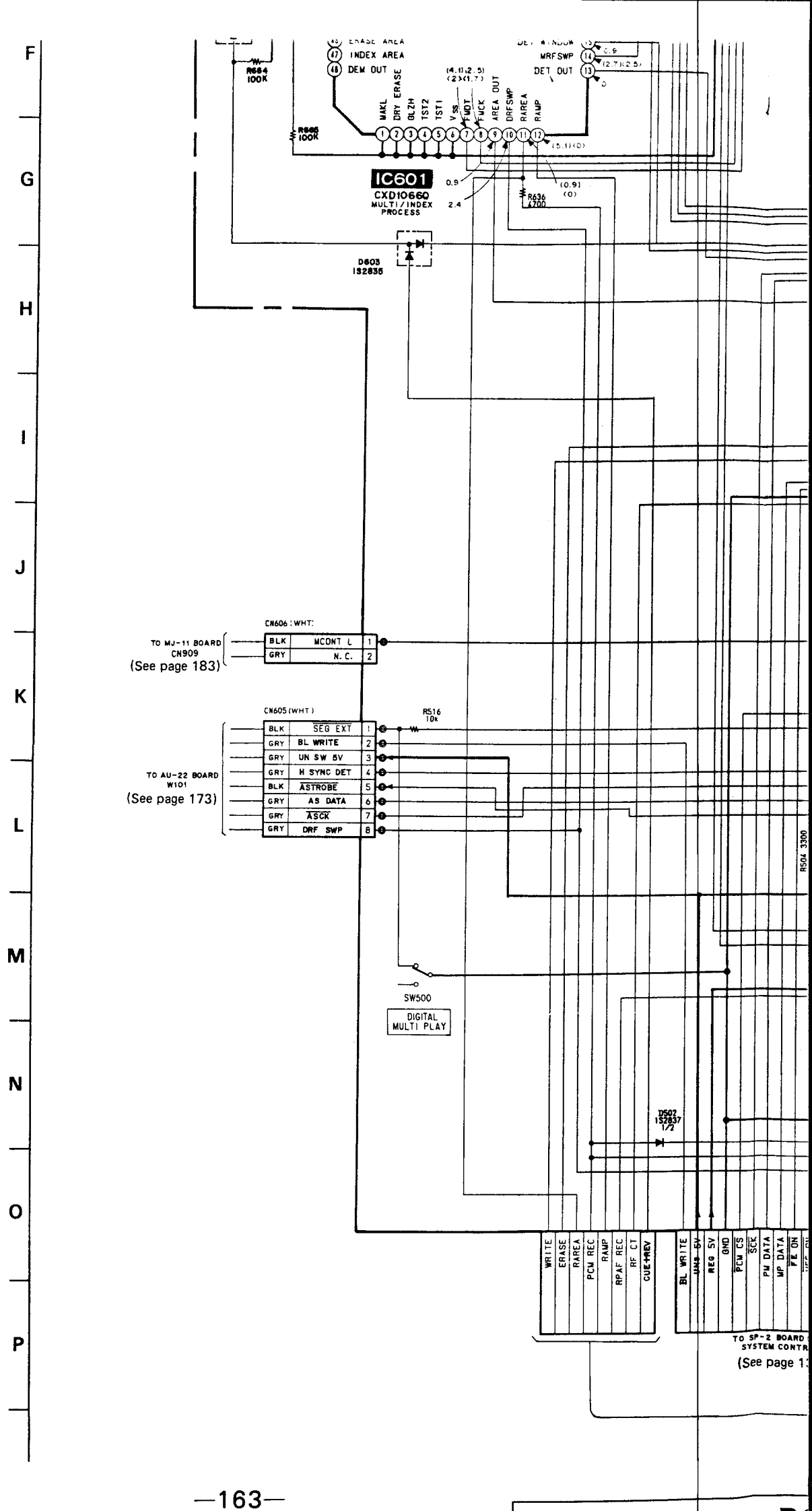
F
G
H
I
J
K
L
M
N
O
P
INDEX AREA
DEM OUT
MRFSWP
DET OUT
R664 100K
R665 100K
MAKL
DRY ERASE
OLZH
TST2
TST1
VSS
FWCK
AREA OUT
DRFSWP
RAREA
RAMP
IC601
CXD10660
MULTI/INDEX PROCESS
R636 4700
D603 1S2836
CN606 (WHT)
TO MJ-11 BOARD CN909
(See page 183)
BLK MCONT L 1
GRY N.C. 2
CN605 (WHT)
R516 10k
BLK SEG EXT 1
GRY BL WRITE 2
GRY UN SW 5V 3
GRY H SYNC DET 4
BLK ASTROBE 5
GRY AS DATA 6
GRY ASCK 7
GRY DRF SWP 8
TO AU-22 BOARD W101
(See page 173)
R504 3300
SW500
DIGITAL MULTI PLAY
D502 1S2837 1/2
WRITE
ERASE
RAREA
PCM REC
RAMP
RPAF REC
RF CT
CUE-REV
BL WRITE
UNR 5V
REG 5V
GND
PCM CS
SCK
PM DATA
WP DATA
PE ON
TO SP-2 BOARD SYSTEM CONTR
(See page 1

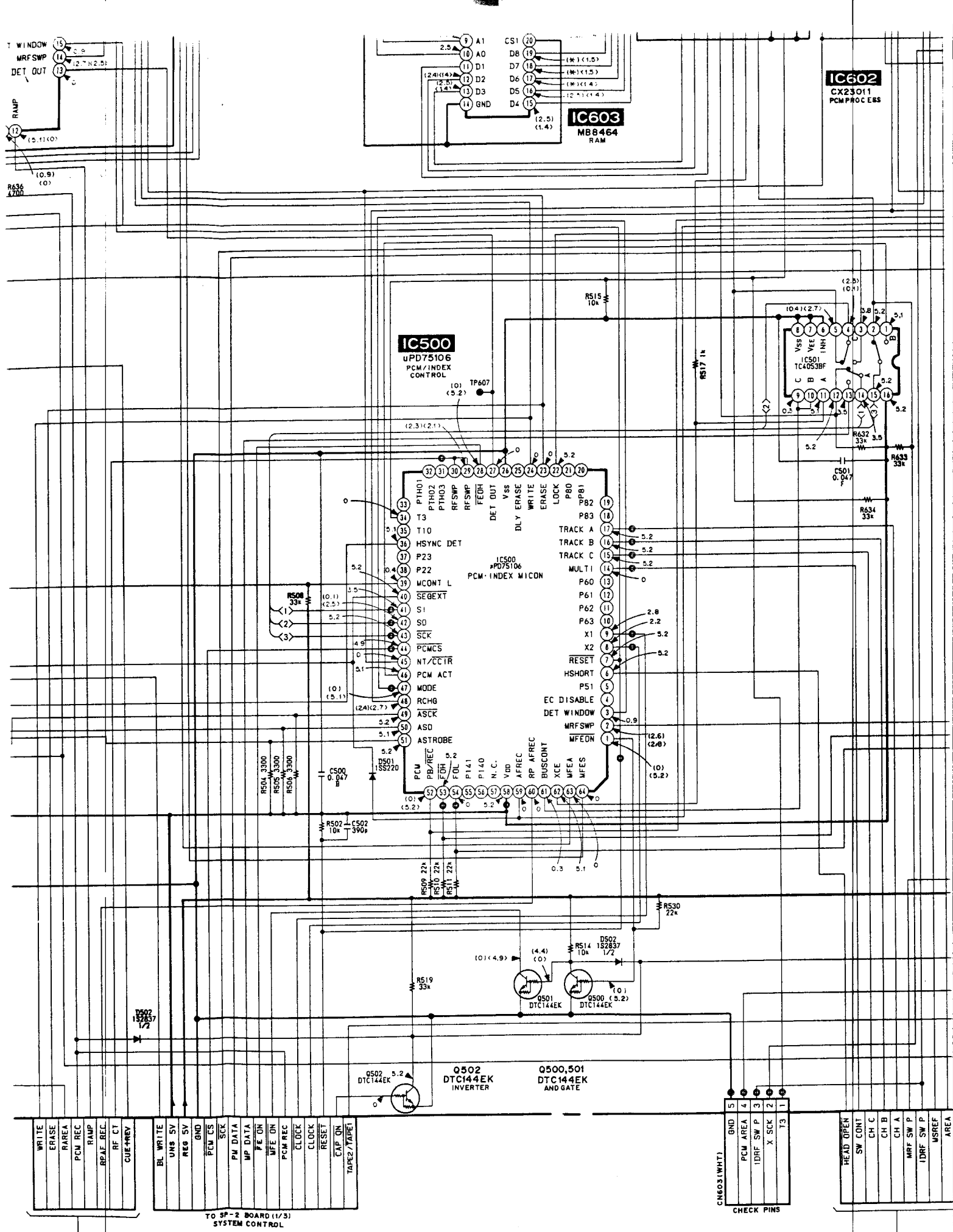
IC602
CX23011
PCM PROCESS
IC603
MB8464
RAM
IC500
uPD75106
PCM/INDEX CONTROL
IC500
μPD75106
PCM·INDEX MICON
IC501
TC4053BF
TP607
RS15 10k
RS17 1k
R632 33k
R633 33k
R634 33k
C501 0.047 F
RS08 33k
R504 3300
R505 3300
R506 3300
C500 0.047
D501 1SS220
R502 10k
C502 390p
R509 22k
R510 22k
R511 22k
R530 22k
R514 10k
D502 1S2837 1/2
R519 33k
Q501 DTC144EK
Q500 DTC144EK
Q502 DTC144EK
INVERTER
Q500,501 DTC144EK
AND GATE
T WINDOW
MRFSWP
DET OUT
RAMP
R636 4700
WRITE
ERASE
RAREA
PCM REC
RAMP
RPAE REC
RF CT
CUE+REV
BL WRITE
UNS 5V
REG 5V
GND
PCM CS
SCK
PW DATA
WP DATA
FE ON
WFE ON
PCM REC
CLOCK
CLOCK
RESET
CAP ON
TAPE2/TAPE1
TO SP-2 BOARD (1/3)
SYSTEM CONTROL
CN603 (WHT)
GND
PCM AREA
1DRF SW P
X SCK
T3
CHECK PINS
HEAD OPEN
SW CONT
CH C
CH B
CH A
MRF SW P
1DRF SW P
WSREF
AREA

(See page 136)

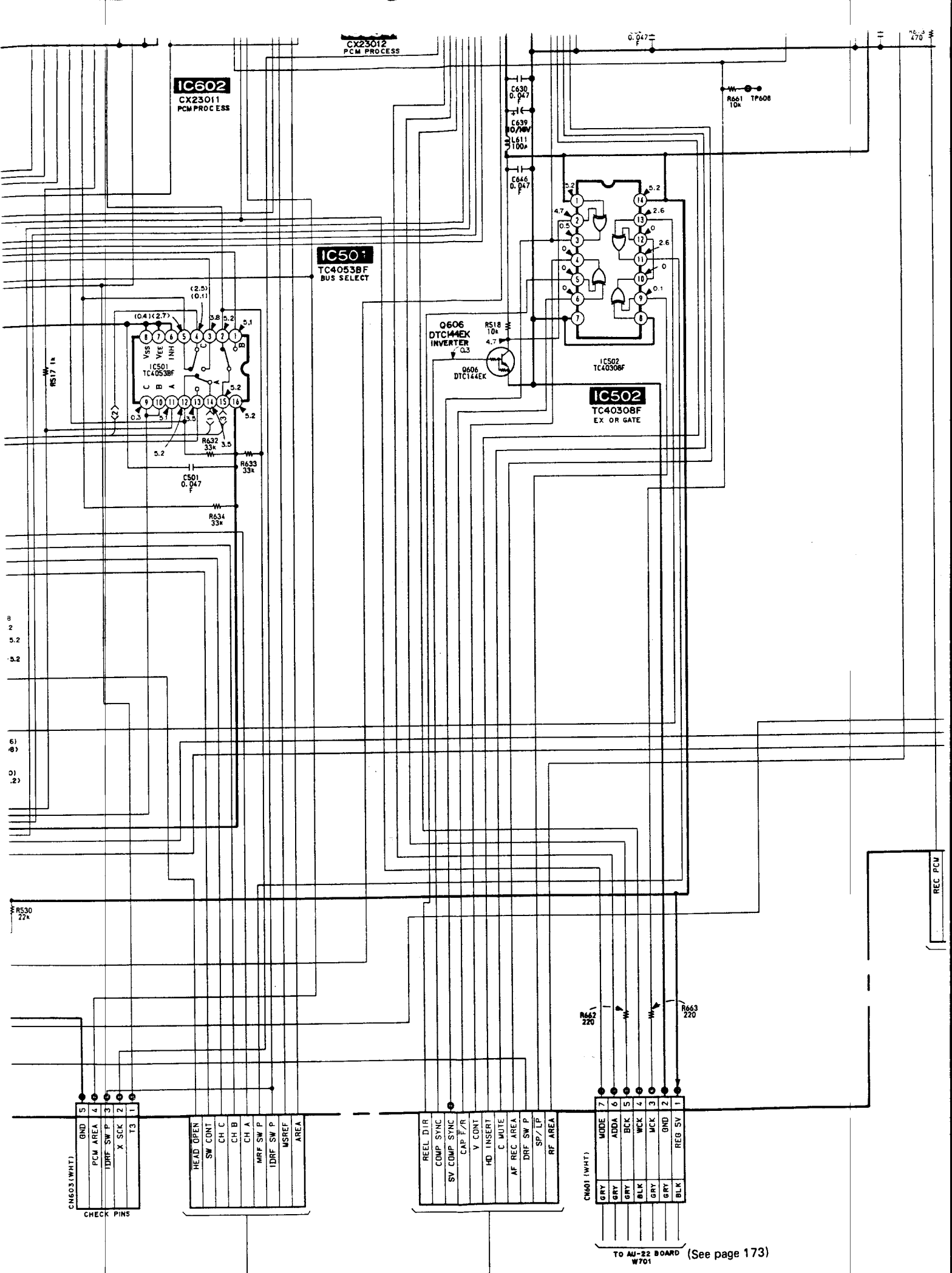
IC602
CX23011
PCM PROCESS
CX23012
PCM PROCESS
IC501
TC40538F
BUS SELECT
IC502
TC40308F
EX OR GATE
Q606
DTC144EK
INVERTER
Q606
DTC144EK
IC501
TC40538F
IC502
TC40308F
C630
0.047
C639
50/16V
L611
100
C644
0.047
R661
10k
TP608
R518
10k
R632
33k
R633
33k
R634
33k
C501
0.047
R530
22k
R662
220
R663
220
REC PCU
CN603 (WHT)
GND
PCM AREA
IDRF SW P
X SCK
T3
CHECK PINS
HEAD OPEN
SW CONT
CH C
CH B
CH A
MRF SW P
IDRF SW P
MSREF
AREA
REEL DIR
COMP SYNC
SV COMP SYNC
CAP F/R
V CONT
HD INSERT
C MUTE
AF REC AREA
DRF SW P
SP/LP
RF AREA
CN601 (WHT)
MODE
ADDA
BCK
WCK
MCK
GND
REG 5V
GRY
GRY
GRY
BLK
GRY
GRY
BLK
TO AU-22 BOARD
W701
(See page 173)

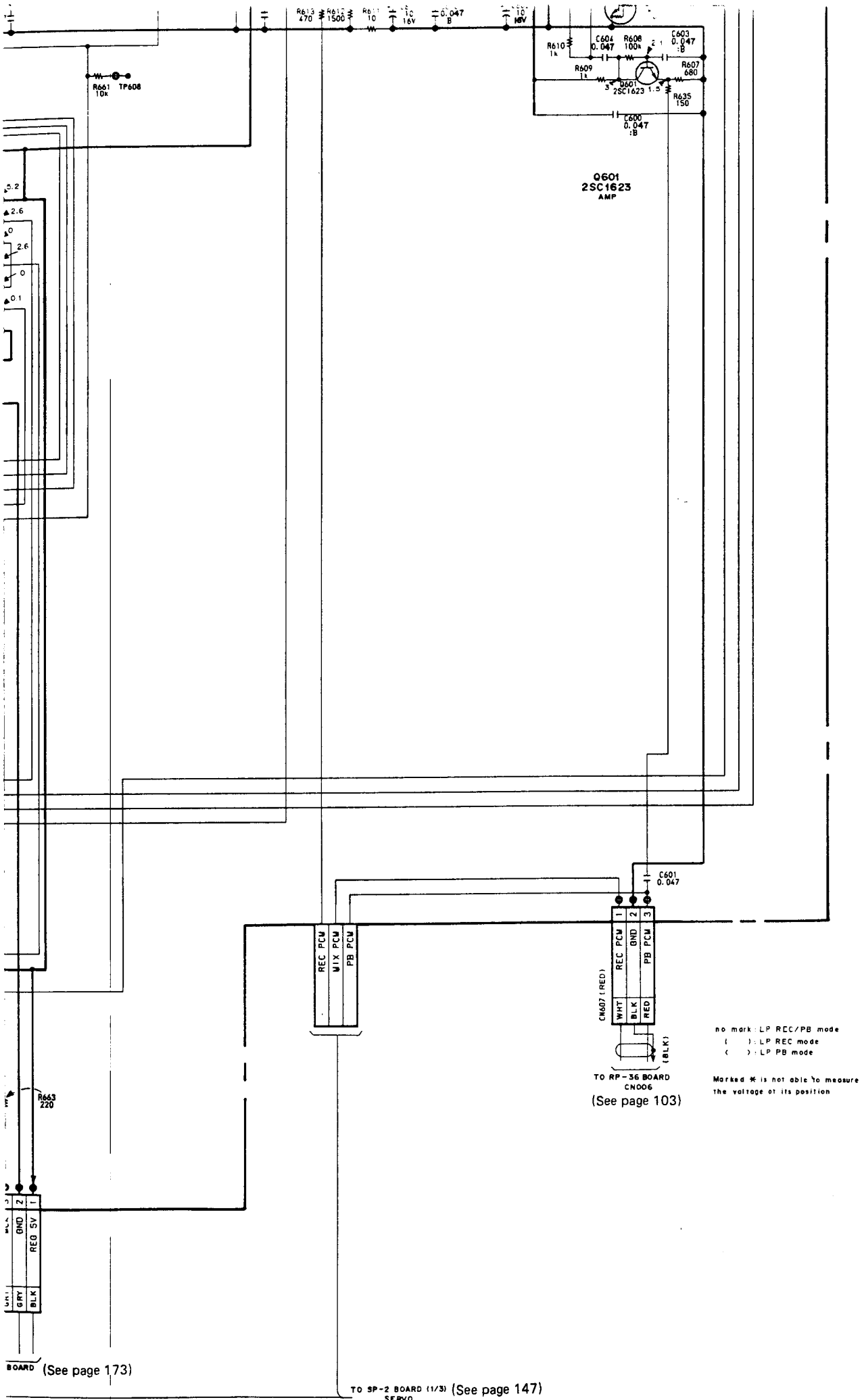
R661 10x
TP608
R613 470
R610 1500
R611 10
C602 16V
0.047 B
C605 10 MBV
R610 1k
C604 0.047
R608 100k
C603 0.047 :B
R609 1k
R607 680
Q601 2SC1623
R635 150
C600 0.047 :B
Q601
2SC1623
AMP
C601 0.047
REC PCM
MIX PCM
PB PCM
CN607 (RED)
WHT
BLK
RED
(BLK)
TO RP-36 BOARD CN006
(See page 103)
no mark : LP REC/PB mode
( ) : LP REC mode
< > : LP PB mode
Marked * is not able to measure the voltage at its position
R663 220
GND
REG 5V
GRY
BLK
BOARD (See page 173)
TO SP-2 BOARD (1/3) SERVO (See page 147)

C603
0.047
:B

R607
680

R635
150

PCM

F

G

H

I

J

K

L

M

N

O

P

IC605 (8) E-E

(2)

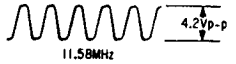


IC602 (1) REC

no mark : LP REC/PB mode
( ) : LP REC mode
< > : LP PB mode

Marked * is not able to measure the voltage at its position

## AU-22(AUDIO) PRIN

—Ref. No. AU-22 BOAR

**Note:**

- ○— : indicates a lead wire mounted on the component side.
- ●— : indicates a lead wire mounted on the printed side.
- : soldering side.
- : B+ Pattern.

- Digital transistor (AU-22:Q201,Q204,Q502) transistor with resistors.
  Refer to the AU-22 board schematic diagram for digital transistor.

When indicating parts by reference number, please include the board name.

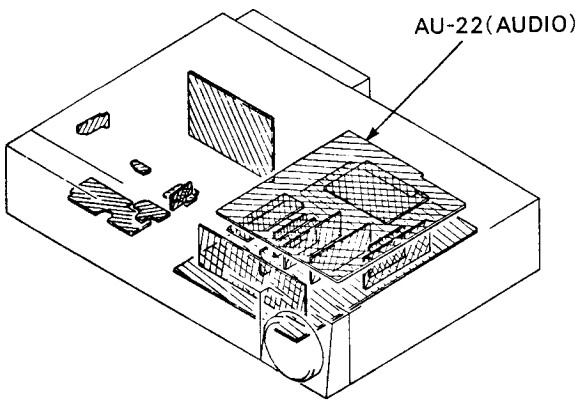


| | |
|---|---|
| D201 | G-13 |
| D203 | A-12 |
| D701 | B-4 |
| IC101 | J-5 |
| IC201 | F-8 |
| IC203 | C-7 |
| IC301 | D-10 |
| IC302 | C-10 |
| IC303 | E-7 |
| IC304 | F-3 |
| IC401 | G-10 |
| IC402 | E-11 |
| IC403 | H-8 |
| IC404 | G-4 |
| IC501 | K-8 |
| IC503 | I-9 |
| IC601 | G-4 |
| IC602 | F-5 |
| IC701 | B-3 |
| IC901 | J-2 |
| Q201 | G-11 |
| Q203 | G-2 |
| Q204 | G-7 |
| Q208 | J-13 |
| Q209 | J-13 |
| Q210 | J-13 |
| Q211 | I-13 |
| Q212 | I-13 |
| Q213 | H-13 |
| Q301 | D-11 |
| Q302 | F-4 |
| Q401 | F-11 |
| Q402 | G-6 |
| Q502 | I-7 |
| Q801 | C-2 |
| Q802 | E-2 |
| Q803 | F-2 |
| Q821 | C-2 |
| Q822 | I-2 |
| Q823 | I-2 |
| Q901 | J-2 |

**AU-22** BOARD

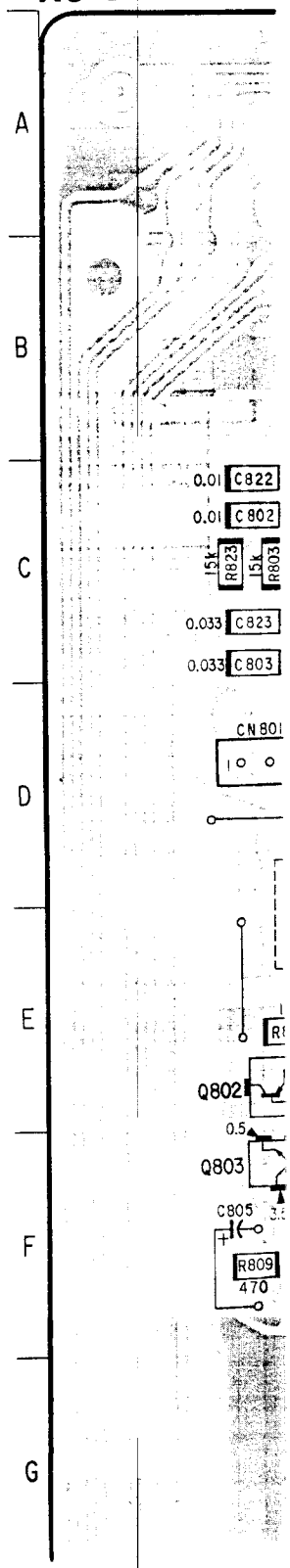

## AU-22(AUDIO) PRINTED WIRING BOARD

—Ref. No. AU-22 BOARD : 7,000 series—

| | |
|---|---|
| D201 | G-13 |
| D203 | A-12 |
| D701 | B-4 |
| IC101 | J-5 |
| IC201 | F-8 |
| IC203 | C-7 |
| IC301 | D-10 |
| IC302 | C-10 |
| IC303 | E-7 |
| IC304 | F-3 |
| IC401 | G-10 |
| IC402 | E-11 |
| IC403 | H-8 |
| IC404 | G-4 |
| IC501 | K-8 |
| IC503 | I-9 |
| IC601 | G-4 |
| IC602 | F-5 |
| IC701 | B-3 |
| IC901 | J-2 |
| Q201 | G-11 |
| Q203 | G-2 |
| Q204 | G-7 |
| Q208 | J-13 |
| Q209 | J-13 |
| Q210 | J-13 |
| Q211 | I-13 |
| Q212 | I-13 |
| Q213 | H-13 |
| Q301 | D-11 |
| Q302 | F-4 |
| Q401 | F-11 |
| Q402 | G-6 |
| Q502 | I-7 |
| Q801 | C-2 |
| Q802 | E-2 |
| Q803 | F-2 |
| Q821 | C-2 |
| Q822 | I-2 |
| Q823 | I-2 |
| Q901 | J-2 |

## AU-22 BOARD

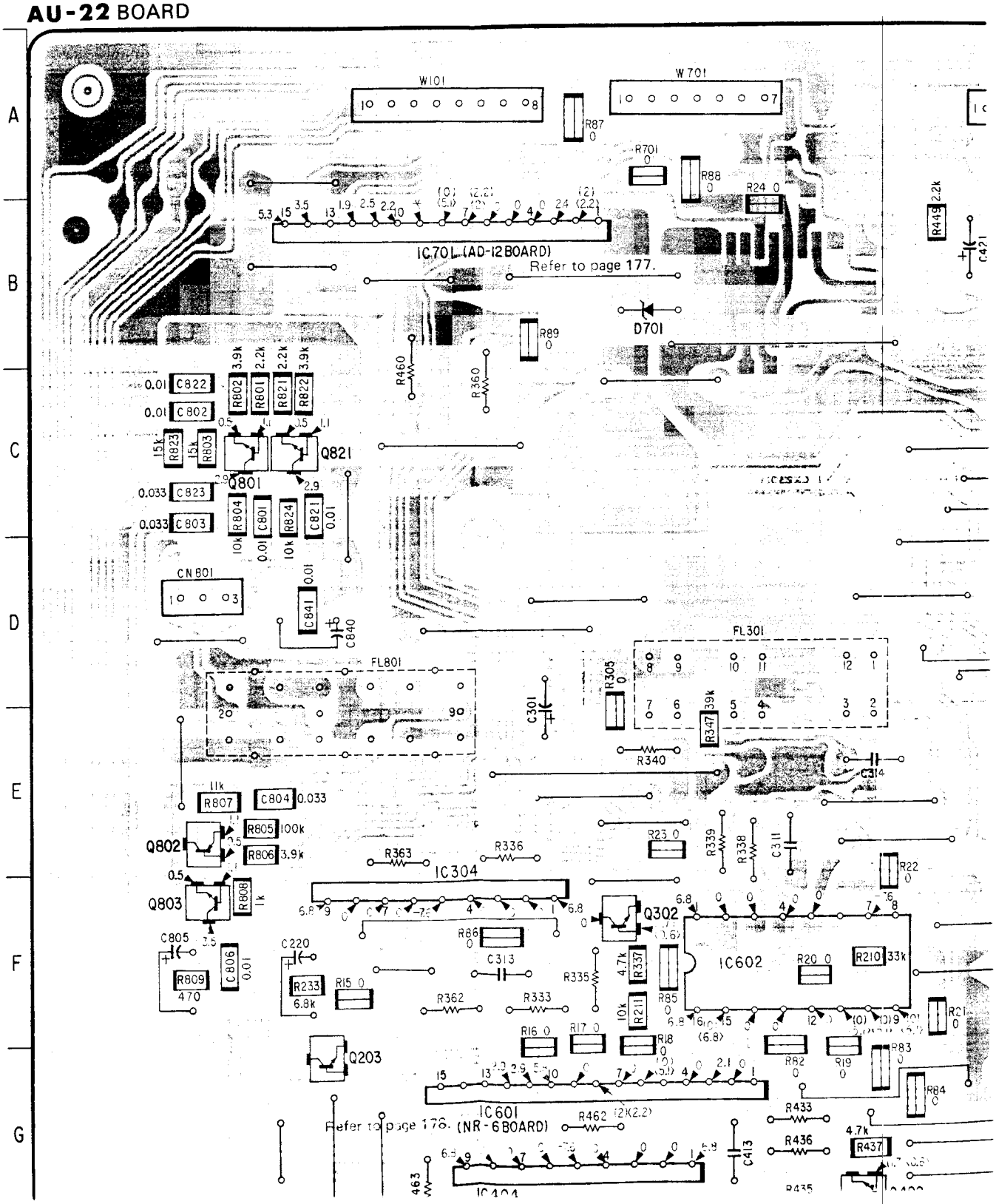

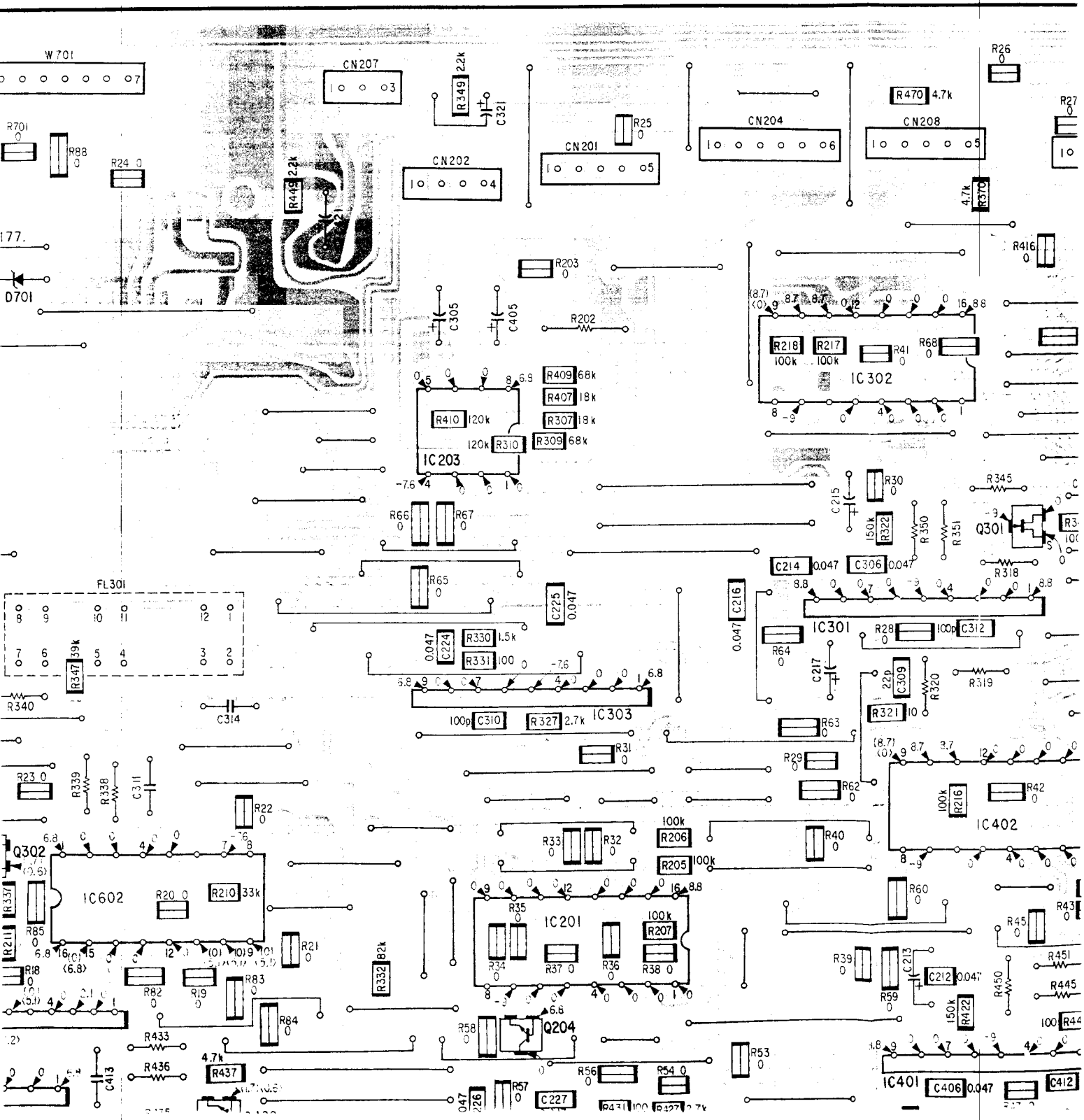
W701
CN207
R349 2.2k
C321
R25 0
CN204
CN208
R470 4.7k
R26 0
R27 0
R701 0
R88 0
R24 0
R449 2.2k
CN202
CN201
R370 4.7k
R416 0
D701
R203 0
C305
C405
R202
R218 100k
R217 100k
R41 0
R68 0
IC302
R409 68k
R407 18k
R307 18k
R309 68k
R410 120k
R310 120k
IC203
R30 0
R345
C215
R322 150k
R350
R351
Q301
R66 0
R67 0
C214 0.047
C306 0.047
R318
FL301
R65 0
C225 0.047
C216 0.047
IC301
R28 0
C312 100p
R64 0
C217
C309 22p
R320
R319
R347 39k
R340
C314
C224 0.047
R330 1.5k
R331 100
IC303
C310 100p
R327 2.7k
R321 10
R63 0
R31 0
R29 0
R62 0
R23 0
R339
R338
C311
R22 0
R216 100k
R42 0
IC402
Q302
IC602
R20 0
R210 33k
R33 0
R32 0
R206 100k
R205 100k
R40 0
R60 0
R43 0
R337
R85 0
R211
R21 0
R35 0
IC201
R207 100k
R45 0
R18 0
R82 0
R19 0
R83 0
R332 82k
R34 0
R37 0
R36 0
R38 0
R39 0
C213
C212 0.047
R59 0
R450
R451
R445
R84 0
R58 0
Q204
R422 150k
R433
R436
R437 4.7k
C413
R56 0
R54 0
R53 0
IC401
C406 0.047
C412
R57 0
C227

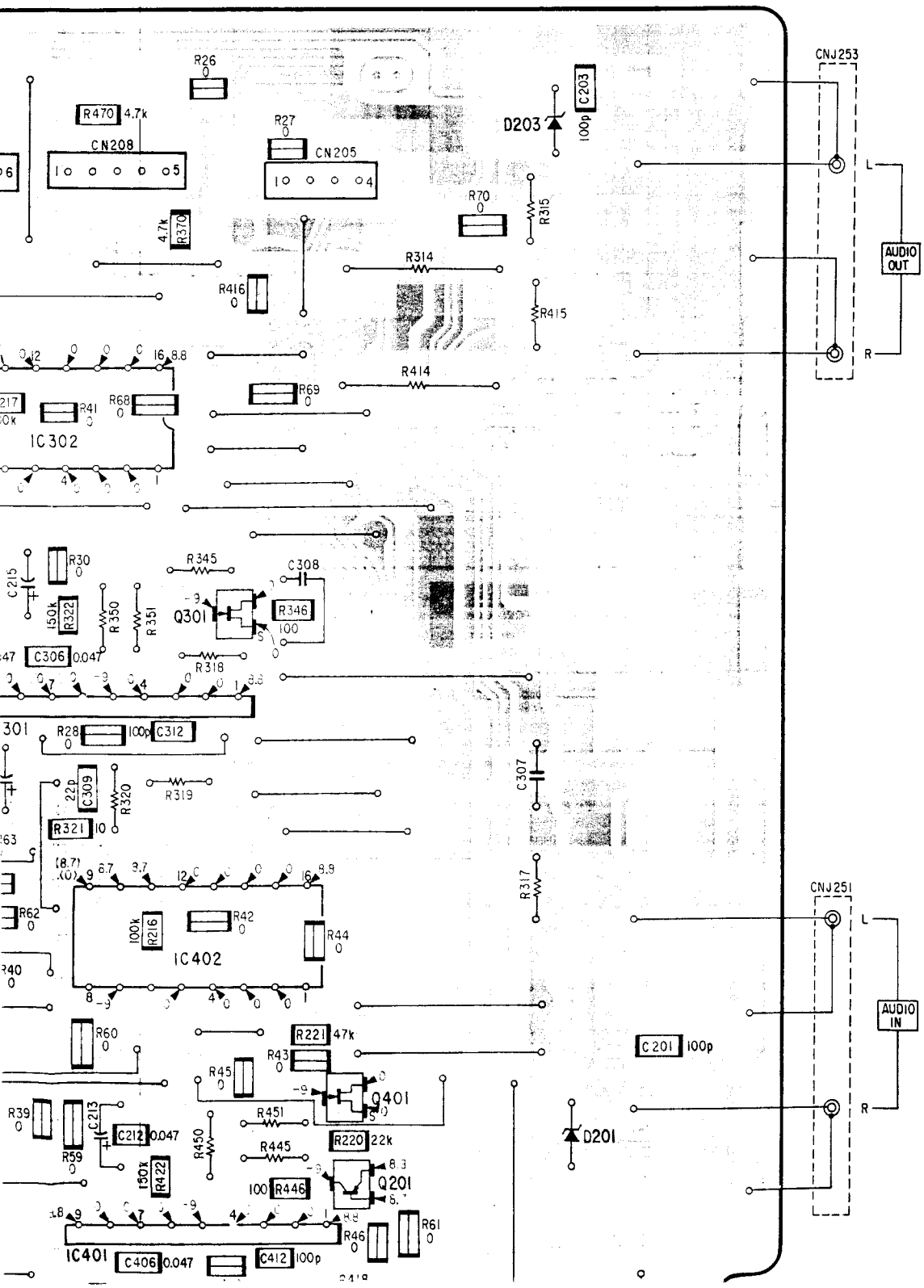
R26
0
R470 4.7k
CN208
R27
0
CN205
D203
C203
100p
CNJ253
L
AUDIO OUT
R
R70
0
R315
4.7k
R370
R314
R416
0
R415
R414
R69
0
R68
0
R41
IC302
R30
0
R345
C308
Q301
R346
100
150k
R322
R350
R351
C306 0.047
R318
R28
0
100p
C312
C307
22p
C309
R320
R319
R321 10
R317
CNJ251
L
AUDIO IN
R
R62
0
100k
R216
R42
0
R44
0
IC402
R60
0
R221 47k
R43
0
R45
0
Q401
C201 100p
D201
R39
0
C213
C212 0.047
R59
R451
R450
R445
R220 22k
150k
R422
100
R446
Q201
R46
0
R61
0
IC401
C406 0.047
C412 100p

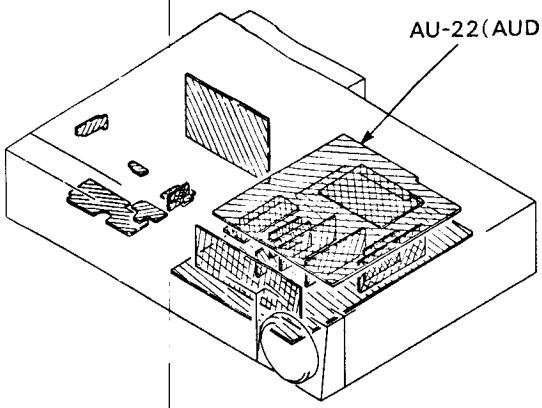


| | |
|---|---|
| Q211 | I-13 |
| Q212 | I-13 |
| Q213 | H-13 |
| Q301 | D-11 |
| Q302 | F-4 |
| Q401 | F-11 |
| Q402 | G-6 |
| Q502 | I-7 |
| Q801 | C-2 |
| Q802 | E-2 |
| Q803 | F-2 |
| Q821 | C-2 |
| Q822 | I-2 |
| Q823 | I-2 |
| Q901 | J-2 |

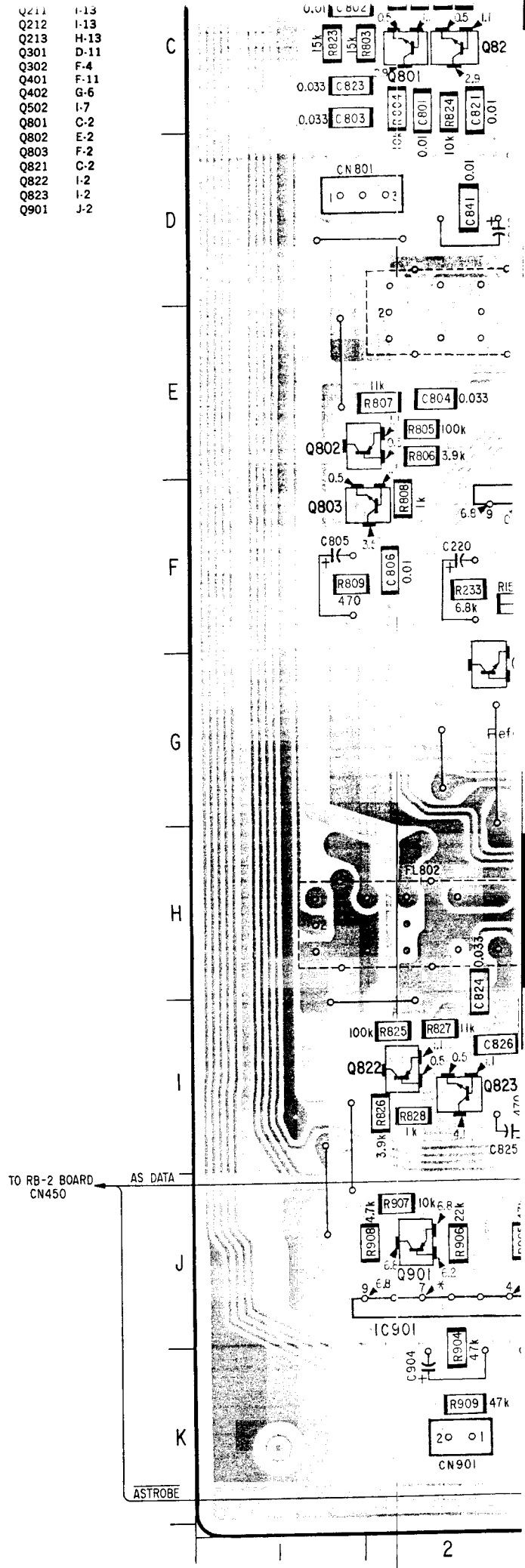

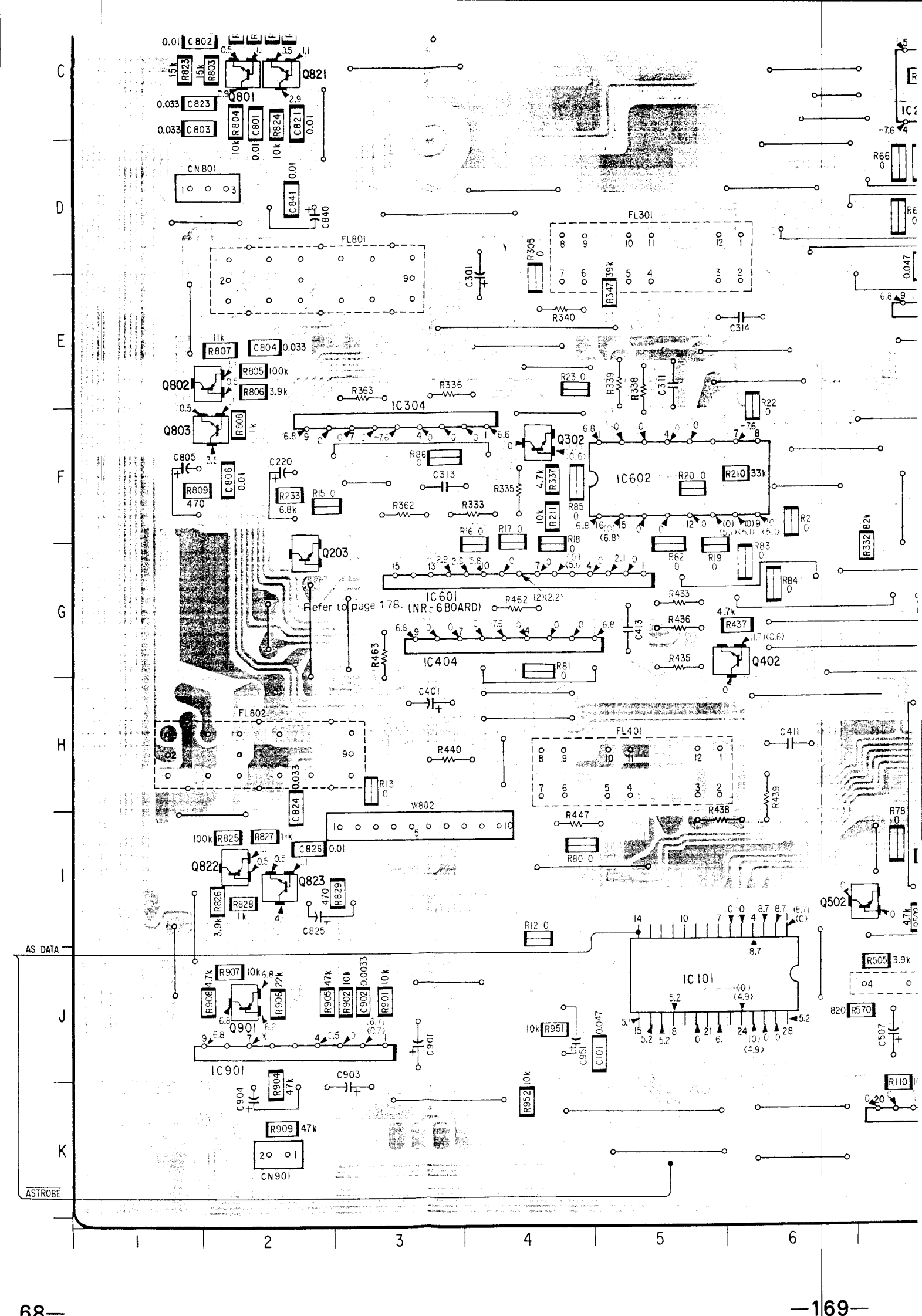
Refer to page 178. (NR-6BOARD)
AS DATA
ASTROBE
CN801
CN901
FL801
FL802
FL301
FL401
IC304
IC602
IC601
IC404
IC101
IC901
Q801
Q802
Q803
Q821
Q822
Q823
Q203
Q302
Q402
Q502
Q901
W802

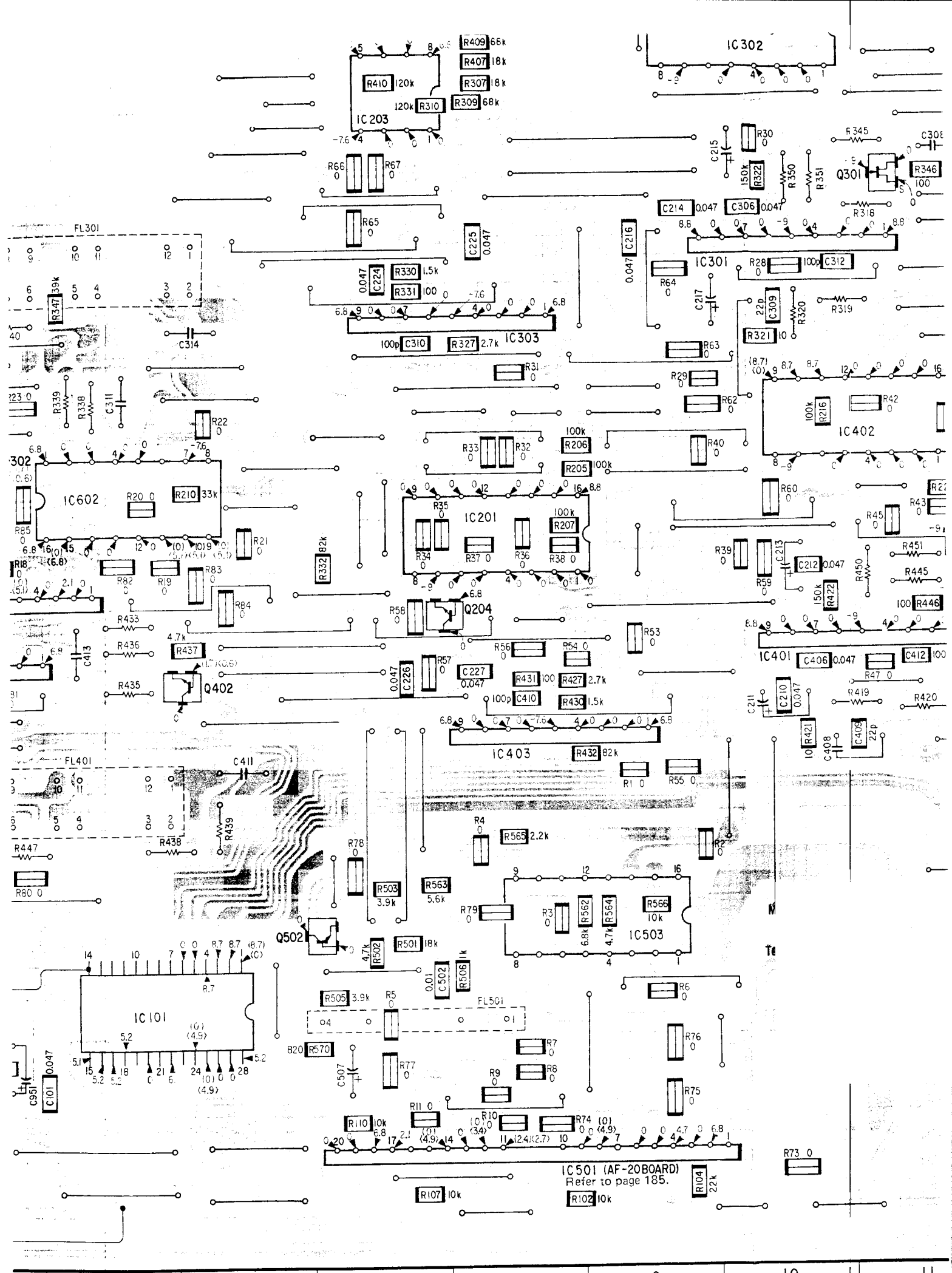
IC302
IC203
R409 68k
R407 18k
R410 120k
R307 18k
120k R310
R309 68k
R66 0
R67 0
R65 0
C225 0.047
C224 0.047
R330 1.5k
R331 100
C215
R30 0
150k R322
R350
R351
R345
C308
Q301
R346 100
R318
C214 0.047
C306 0.047
IC301
C216 0.047
R64 0
R28 0
100p C312
C217
22p C309
R320
R319
R321 10
R63 0
FL301
R347 39k
C314
R339
R338
C311
R22 0
IC303
100p C310
R327 2.7k
R31 0
R29 0
R62 0
IC602
R20 0
R210 33k
R85 0
R21 0
R332 82k
R33 0
R32 0
100k R206
100k R205
R40 0
IC201
R35 0
R34 0
R37 0
R36 0
R38 0
100k R207
IC402
100k R216
R42 0
R60 0
R45 0
R43 0
R39 0
R59 0
C213
C212 0.047
150k R422
R450
R451
R445
100 R446
R82 0
R19 0
R83 0
R84 0
R58 0
Q204
R53 0
R56 0
R54 0
R57 0
C227 0.047
R431 100
R427 2.7k
R433
R436
R437
R435
Q402
C226 0.047
100p C410
R430 1.5k
IC403
R432 82k
IC401
C406 0.047
C412 100
R47 0
C211
C210 0.047
R419
R420
R421
C409 22p
C408
C413
FL401
C411
R439
R438
R447
R80 0
R1 0
R55 0
R4 0
R565 2.2k
R2 0
R78 0
R503 3.9k
R563 5.6k
R79 0
R3 0
R562 6.8k
R564 4.7k
R566 10k
IC503
Q502
R502 4.7k
R501 18k
C502 0.01
R506 1k
IC101
C951
C101 0.047
R505 3.9k
R5 0
FL501
820 R670
C507
R77 0
R7 0
R8 0
R9 0
R6 0
R76 0
R75 0
R110 10k
R11 0
R10
R74 (0)
R107 10k
R102 10k
R104 22k
R73 0
IC501 (AF-20BOARD)
Refer to page 185.

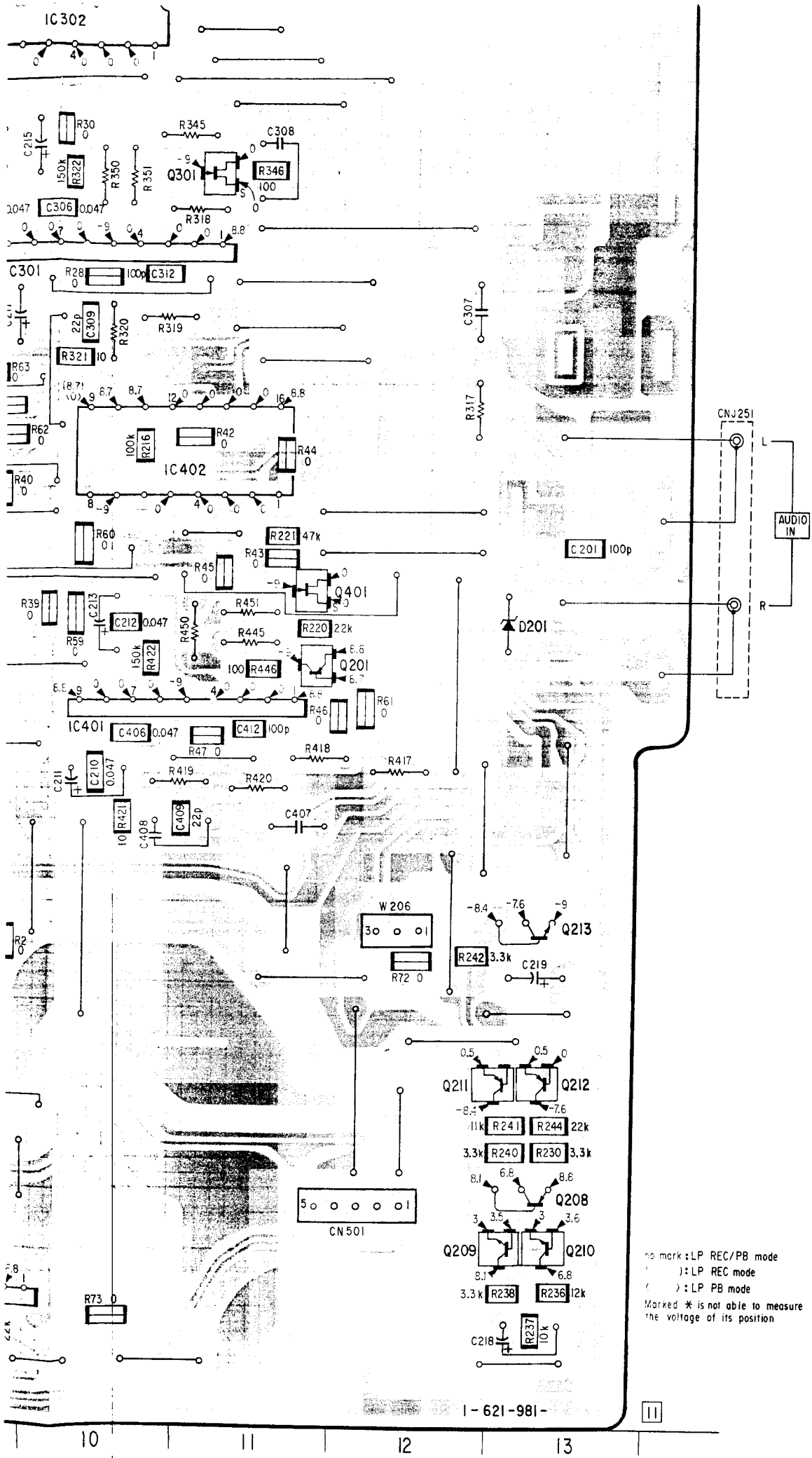
IC302
R30 0
C215
150k R322
R350
R351
R345
C308
Q301
R346 100
R318
0.047 C306 0.047
C301
R28 0
100p C312
22p C309
R320
R319
R321 10
C307
R317
R63 0
R62 0
R40 0
100k R216
R42 0
R44 0
IC402
CNJ251
L
AUDIO IN
R
R60 0
R221 47k
R43 0
R45 0
Q401
C201 100p
D201
R39 0
C213
C212 0.047
R59
R451
R450
R445
R220 22k
150k R422
100 R446
Q201
R46 0
R61 0
IC401
C406 0.047
C412 100p
R47 0
R418
R417
R419
R420
C211
C210 0.047
R421 10
C408
C409 22p
C407
W206
R72 0
Q213
R242 3.3k
C219
R2 0
Q211
Q212
R241 11k
R244 22k
R240 3.3k
R230 3.3k
Q208
Q209
Q210
R238 3.3k
R236 12k
CN501
R73 0
C218
R237 10k
no mark : LP REC/PB mode
( ) : LP REC mode
( ) : LP PB mode
Marked * is not able to measure the voltage of its position
1-621-981-
11
10
11
12
13

# AU-22(AUDIO) SCHEMATIC DIAGRAM

—Ref. No. AU-22 BOARD : 7,000 series—

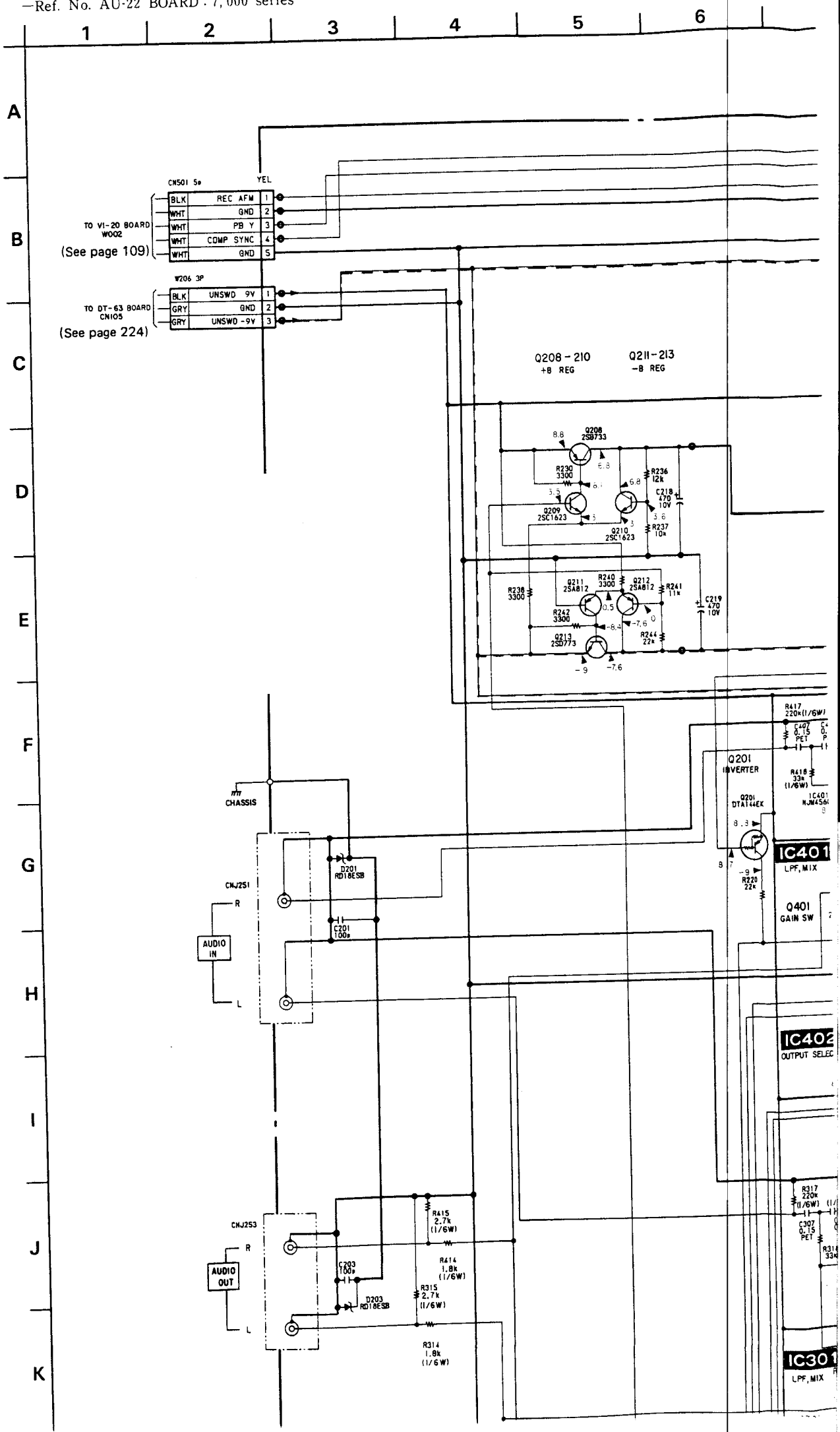

RAM

3 4 5 6 7 8 9 10

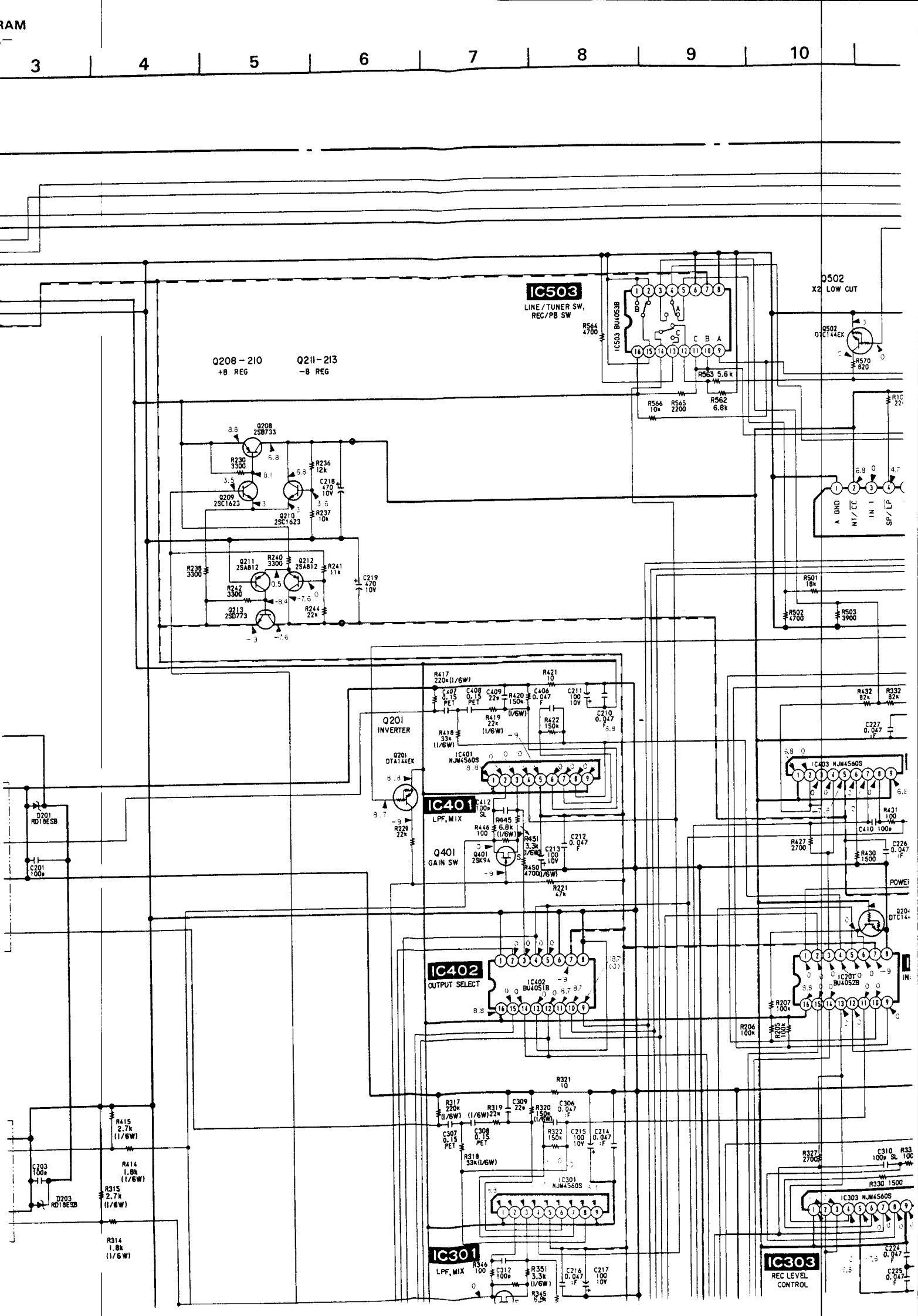

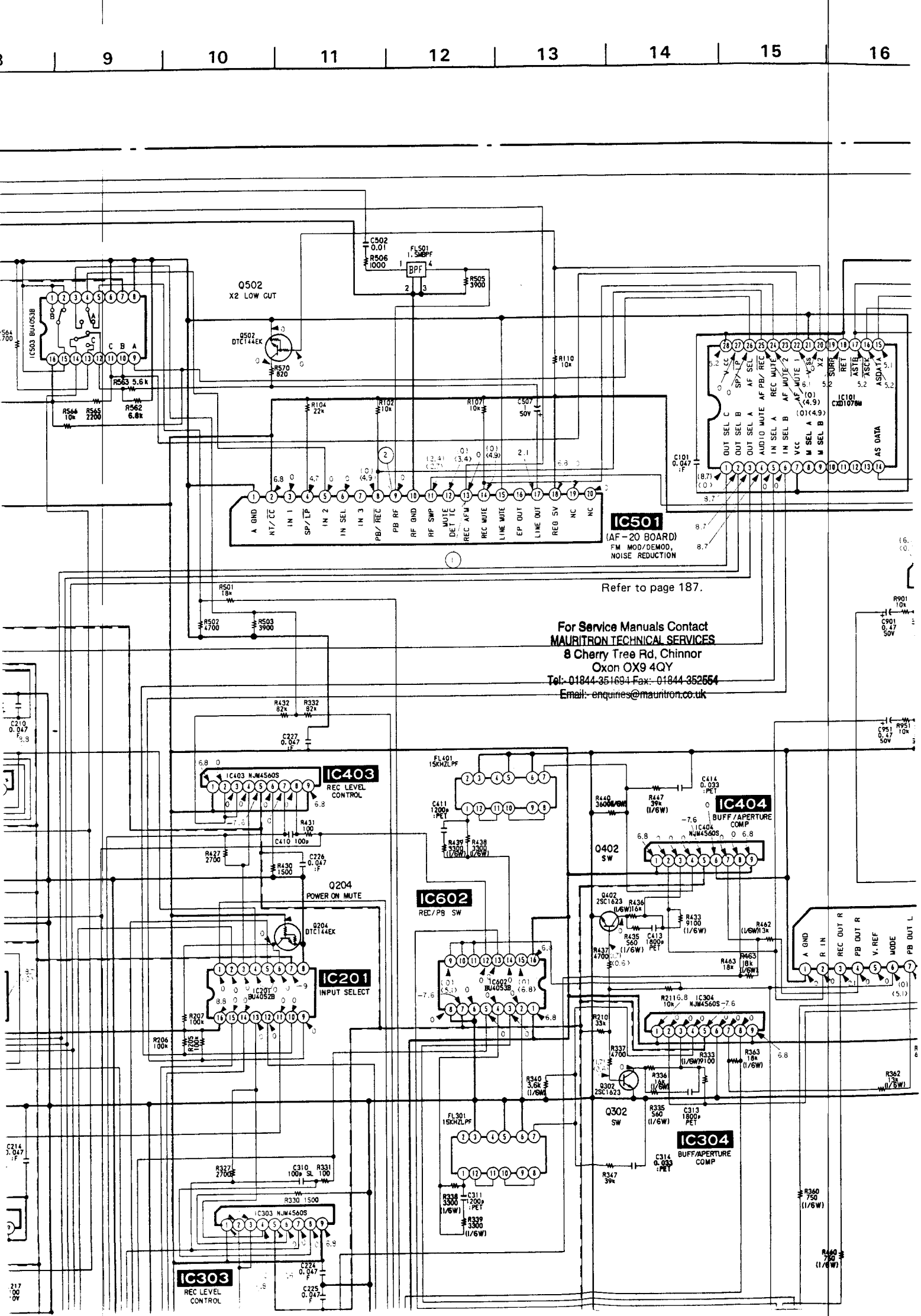
9
10
11
12
13
14
15
16
Q502
X2 LOW CUT
DTC144EK
IC503 BU4053B
IC501
(AF-20 BOARD)
FM MOD/DEMOD,
NOISE REDUCTION
IC101
CXD1078M
IC403
REC LEVEL
CONTROL
IC403 NJM4560S
IC602
REC/PB SW
IC602 BU4053B
IC201
INPUT SELECT
IC201 BU4052B
IC303
REC LEVEL
CONTROL
IC303 NJM4560S
IC404
BUFF/APERTURE
COMP
IC404 NJM4560S
IC304
BUFF/APERTURE
COMP
IC304 NJM4560S
Q204
POWER ON MUTE
Q402
SW
Q302
SW
FL501
1.5MBPF
FL401
15KHZLPF
FL301
15KHZLPF
Refer to page 187.
For Service Manuals Contact
MAURITRON TECHNICAL SERVICES
8 Cherry Tree Rd, Chinnor
Oxon OX9 4QY
Tel:- 01844 351694 Fax:- 01844 352654
Email:- enquiries@mauritron.co.uk

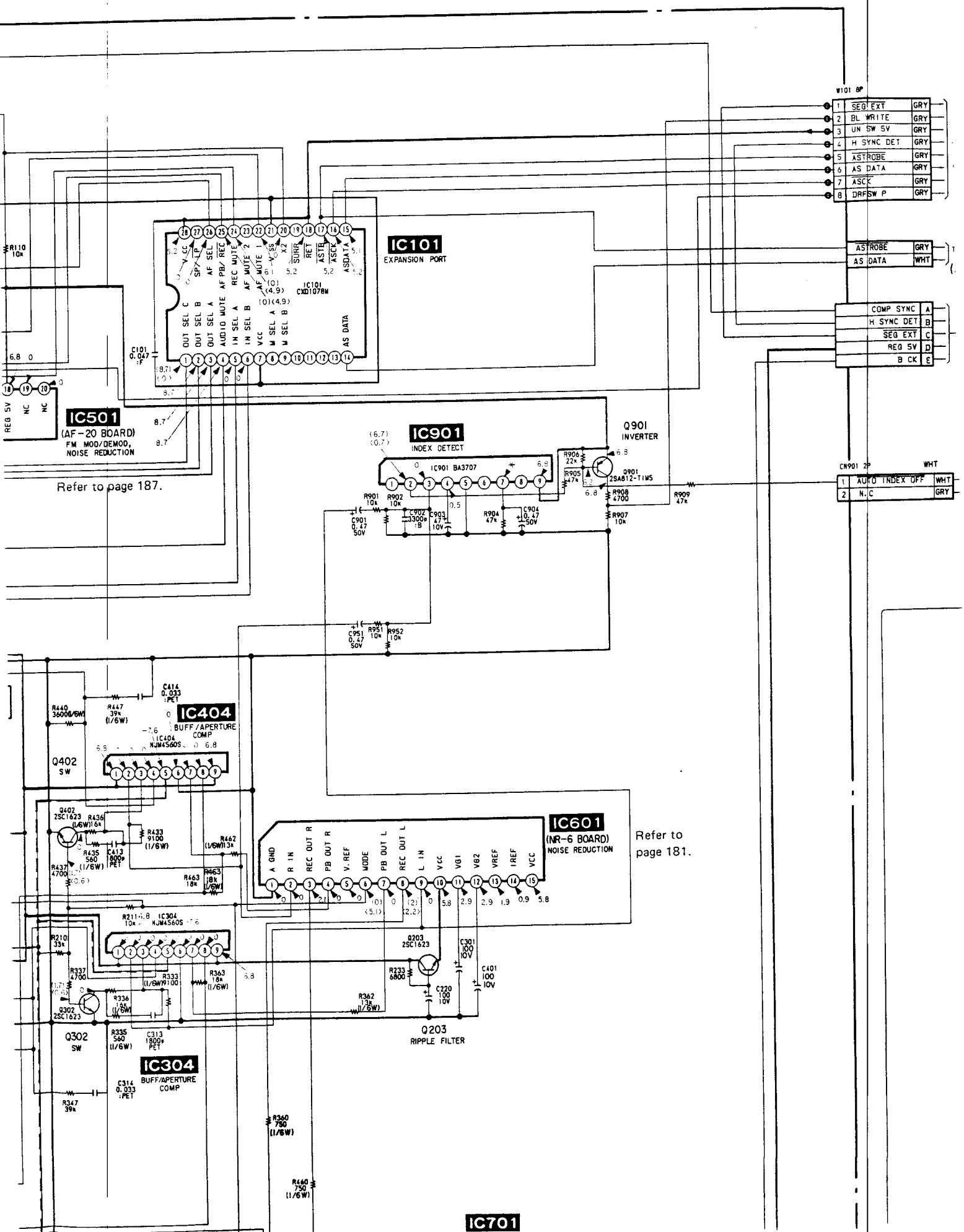
W101 8P
1 SEG EXT GRY
2 BL WRITE GRY
3 UN SW 5V GRY
4 H SYNC DET GRY
5 ASTROBE GRY
6 AS DATA GRY
7 ASCK GRY
8 DRFSW P GRY
ASTROBE GRY
AS DATA WHT
COMP SYNC A
H SYNC DET B
SEG EXT C
REG 5V D
B CK E
IC101
EXPANSION PORT
IC501
(AF-20 BOARD)
FM MOD/DEMOD,
NOISE REDUCTION
Refer to page 187.
IC901
INDEX DETECT
IC901 BA3707
Q901
INVERTER
2SA812-T1MS
CN901 2P WHT
1 AUTO INDEX OFF WHT
2 N.C GRY
IC404
BUFF/APERTURE
COMP
NJM4560S
Q402
SW
2SC1623
IC601
(NR-6 BOARD)
NOISE REDUCTION
A GND
R IN
REC OUT R
PB OUT R
V. REF
MODE
PB OUT L
REC OUT L
L IN
VCC
V01
V02
VREF
IREF
VCC
Refer to page 181.
IC304
BUFF/APERTURE
COMP
Q302
SW
2SC1623
Q203
2SC1623
Q203
RIPPLE FILTER
IC701

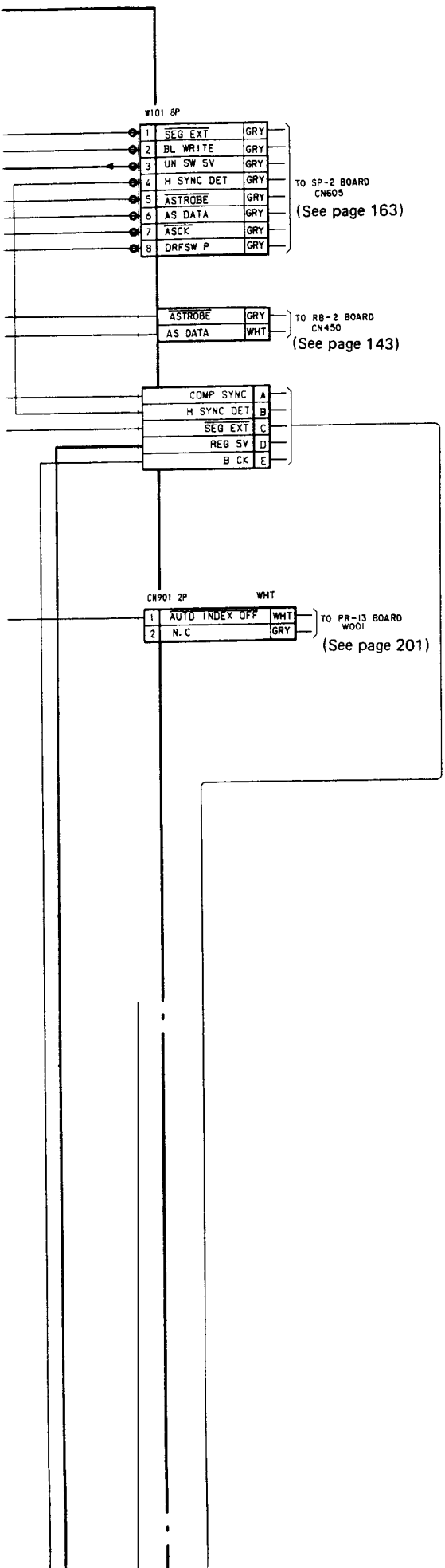


## IC901 BA3707

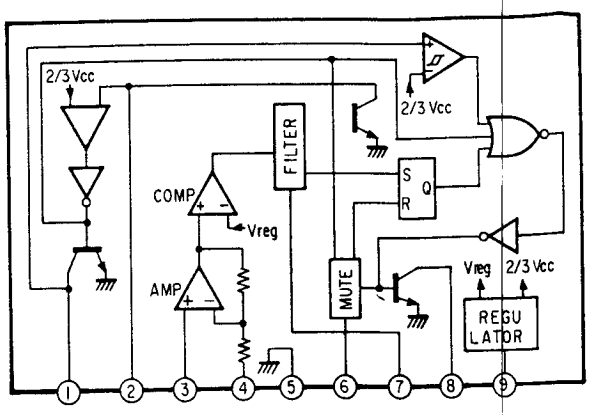


## IC301, 303, 304, 401, 403, 404 NJM4560S

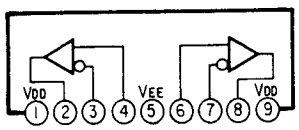


## IC302, 402 BU4051B

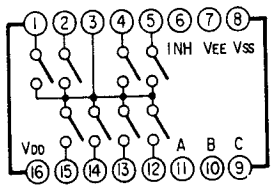


## IC201 BU4052B

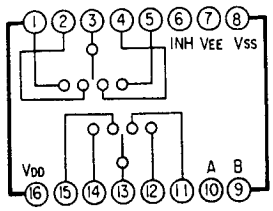


## IC602 BU4053B

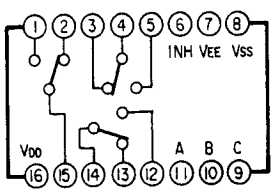

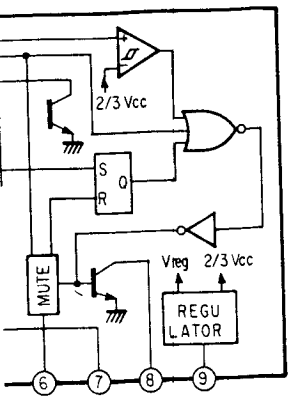


403, 404 NJM4560S

Note:

- Caution when replacing chip parts.
  New parts must be attached after removal of chip.
  Be careful not to heat the minus side of tantalum capacitor, because it is damaged by the heat.
- All resistors are in ohms, 1/10W unless otherwise noted.
  kΩ: 1000Ω, MΩ: 1000kΩ.
- All capacitors are in μF unless otherwise noted. pF : μμF.
  50V or less are not indicated except for electrolytice. and tantalums.
- All variable and adjustable resistors have characteristic curve B, unless otherwise noted.
- ▭ : panel designation.
- △ : internal component.
- ——— : B + bus.
- – – – : B – bus.
- Voltages are dc with respect to ground unless otherwise noted.
- Readings are taken with a colour-bar signal input.
- Readings are taken with a digital multimeter (DC10MΩ).
- Voltage variations may be noted due to normal production tolerances.

When indicating parts by reference number, please include the board name.

- **Signal path**

**AU-22** BOARD

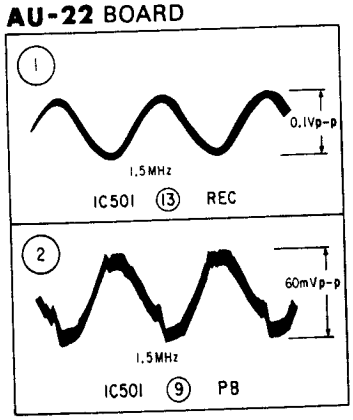

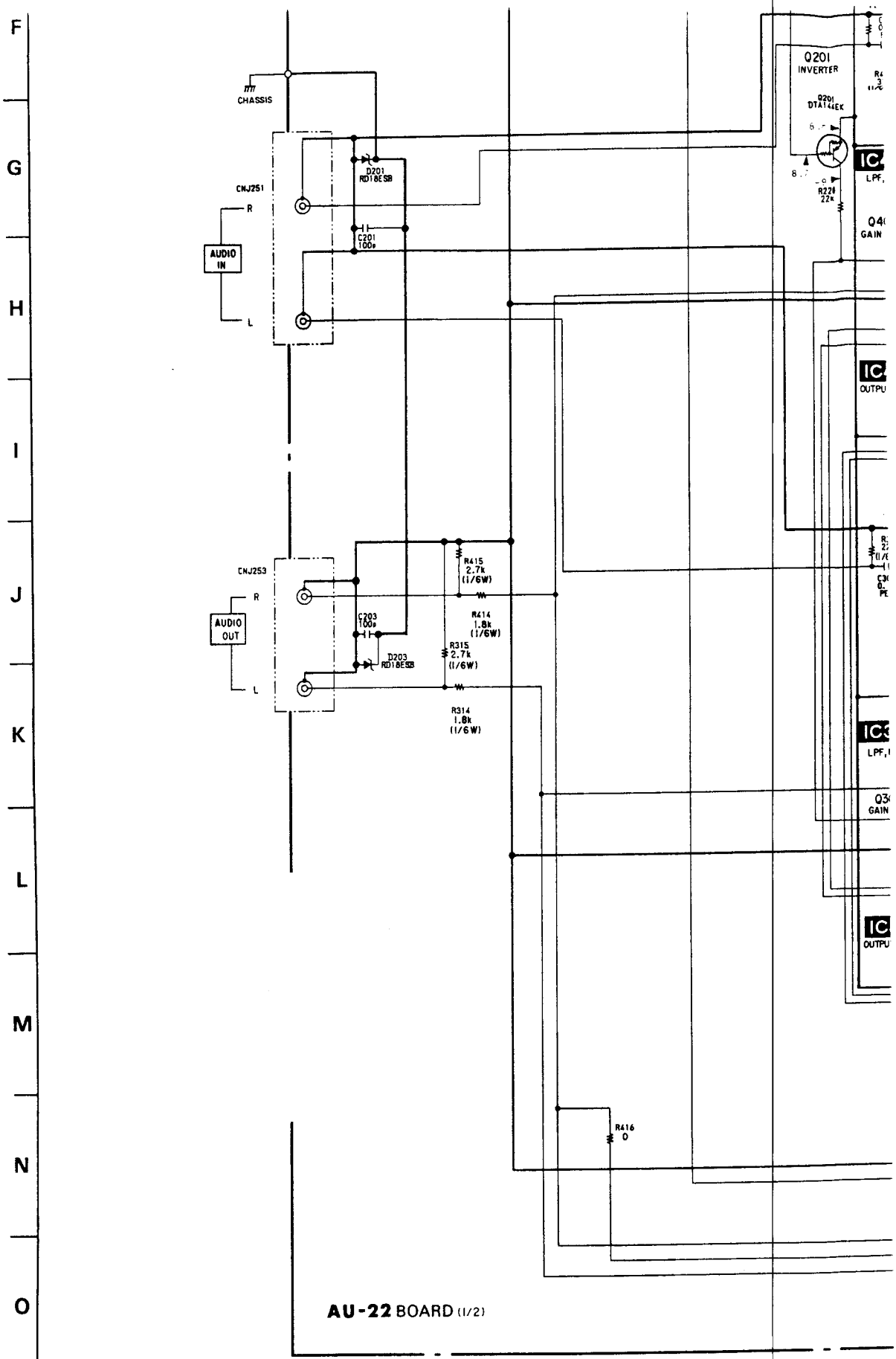


**AU-22** BOARD (1/2)

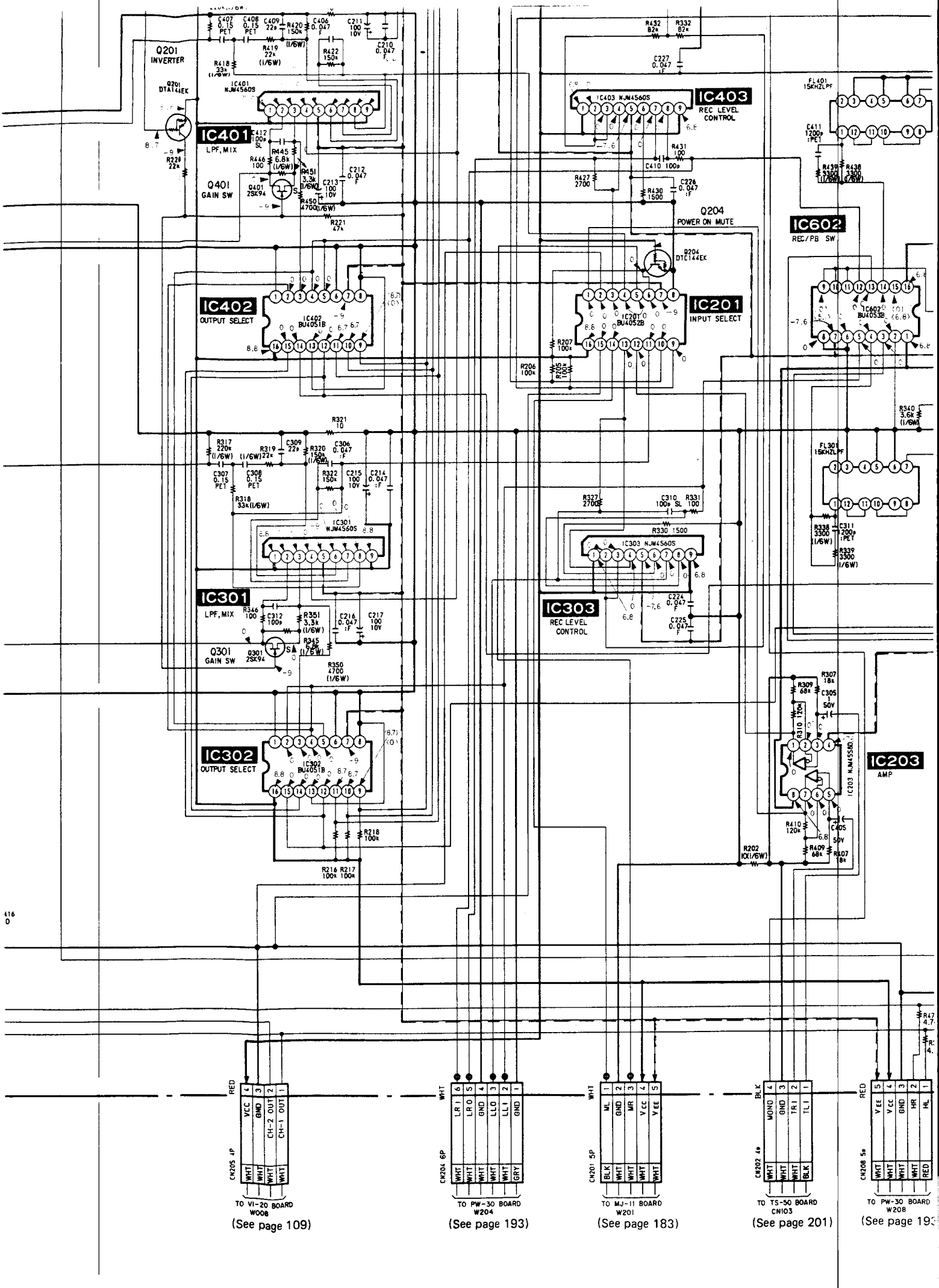


(See page 109)
(See page 193)
(See page 183)
(See page 201)
(See page 193)

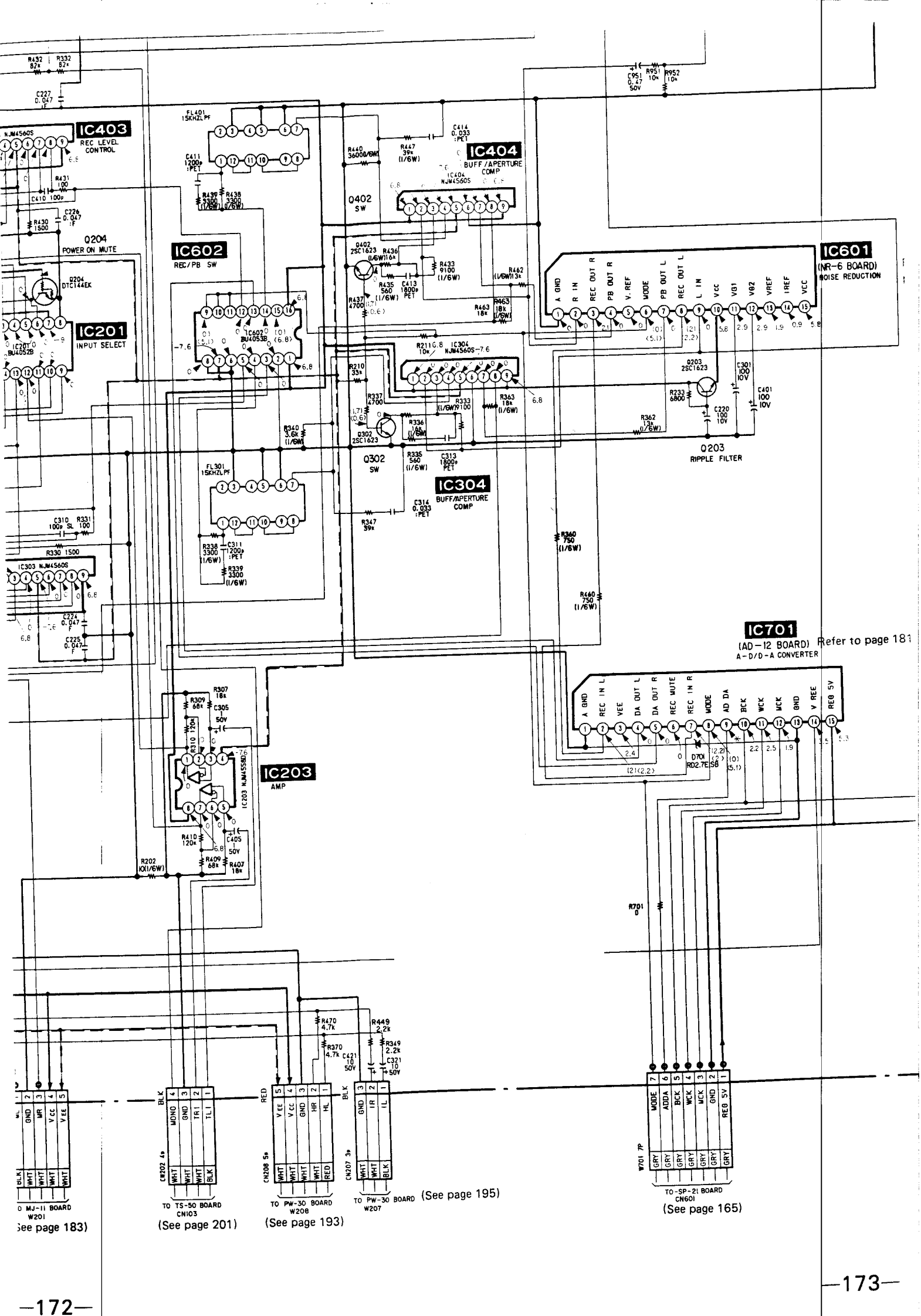
IC403
REC LEVEL CONTROL
IC404
BUFF/APERTURE COMP
IC602
REC/PB SW
IC601
(NR-6 BOARD)
NOISE REDUCTION
IC201
INPUT SELECT
IC304
BUFF/APERTURE COMP
IC203
AMP
IC701
(AD-12 BOARD) Refer to page 181
A-D/D-A CONVERTER
Q204
POWER ON MUTE
Q203
RIPPLE FILTER
Q302
SW
Q402
SW
TO MJ-11 BOARD W201
(See page 183)
TO TS-50 BOARD CN103
(See page 201)
TO PW-30 BOARD W208
(See page 193)
TO PW-30 BOARD W207
(See page 195)
TO-SP-21 BOARD CN601
(See page 165)

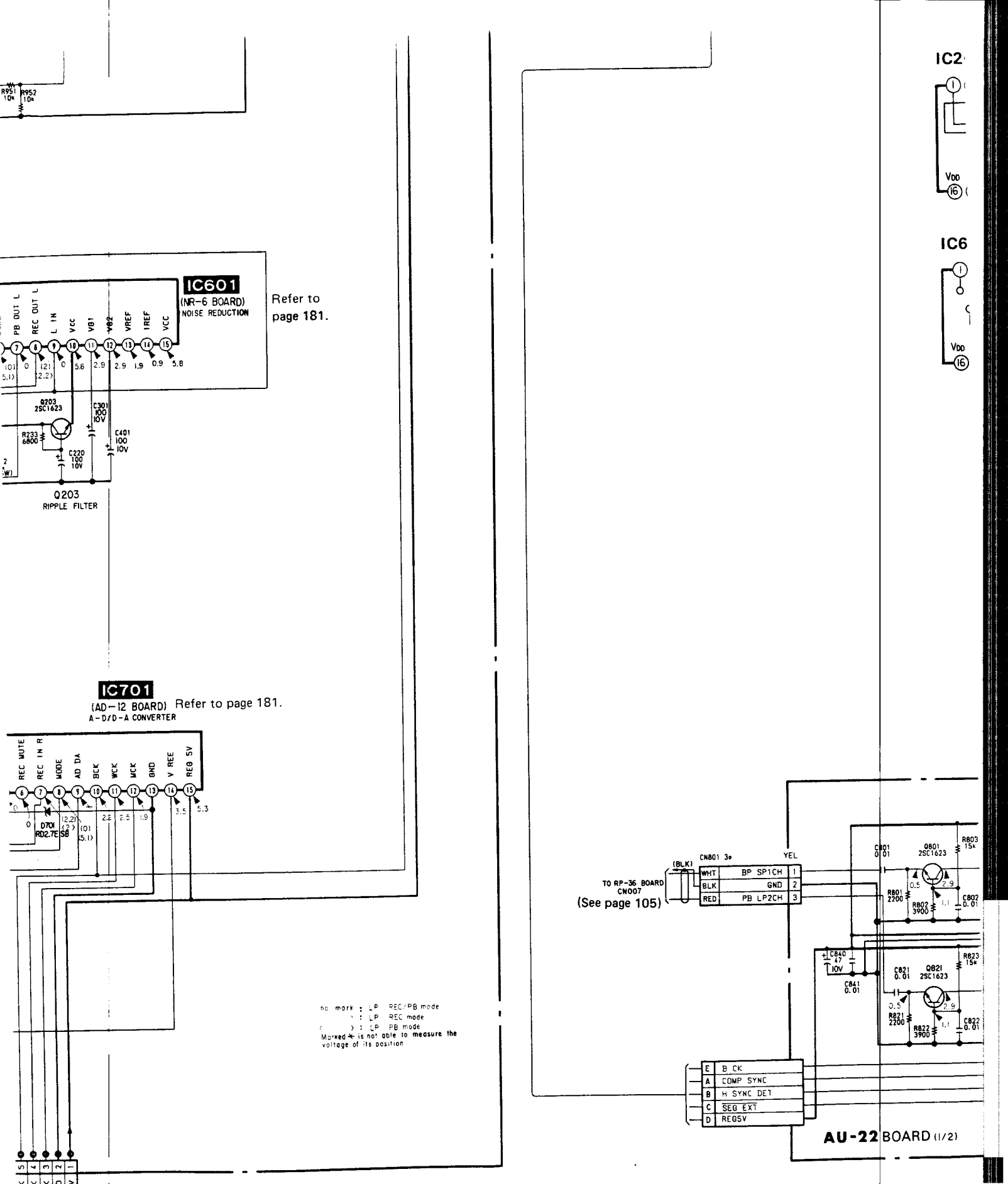
R951 10k
R952 10k
IC601
(NR-6 BOARD)
NOISE REDUCTION
PB OUT L
REC OUT L
L IN
VCC
VB1
VB2
VREF
IREF
VCC
Refer to page 181.
Q203 2SC1623
C301 100 10V
C401 100 10V
R233 6800
C220 100 10V
Q203
RIPPLE FILTER
IC701
(AD-12 BOARD) Refer to page 181.
A-D/D-A CONVERTER
REC MUTE
REC IN R
MODE
AD DA
BCK
WCK
MCK
GND
V REE
REG 5V
D701 RD2.7ESB
IC2
VDD
IC6
VDD
TO RP-36 BOARD CN007
(See page 105)
CN801 3P
(BLK)
YEL
WHT BP SP1CH 1
BLK GND 2
RED PB LP2CH 3
C801 0.01
Q801 2SC1623
R803 15k
R801 2200
R802 3900
C802 0.01
C840 47 10V
C841 0.01
C821 0.01
Q821 2SC1623
R823 15k
R821 2200
R822 3900
C822 0.01
E B CK
A COMP SYNC
B H SYNC DET
C SEG EXT
D REG5V
AU-22 BOARD (1/2)
no mark : LP REC/PB mode
( ) : LP REC mode
( ) : LP PB mode
Marked * is not able to measure the voltage of its position
BCK
WCK
MCK
GND
REG 5V
GRY
SP-21 BOARD CN601
(See page 165)

## IC201 BU4052B

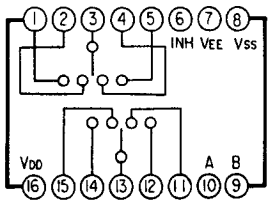


## IC602 BU4053B

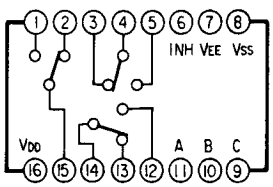


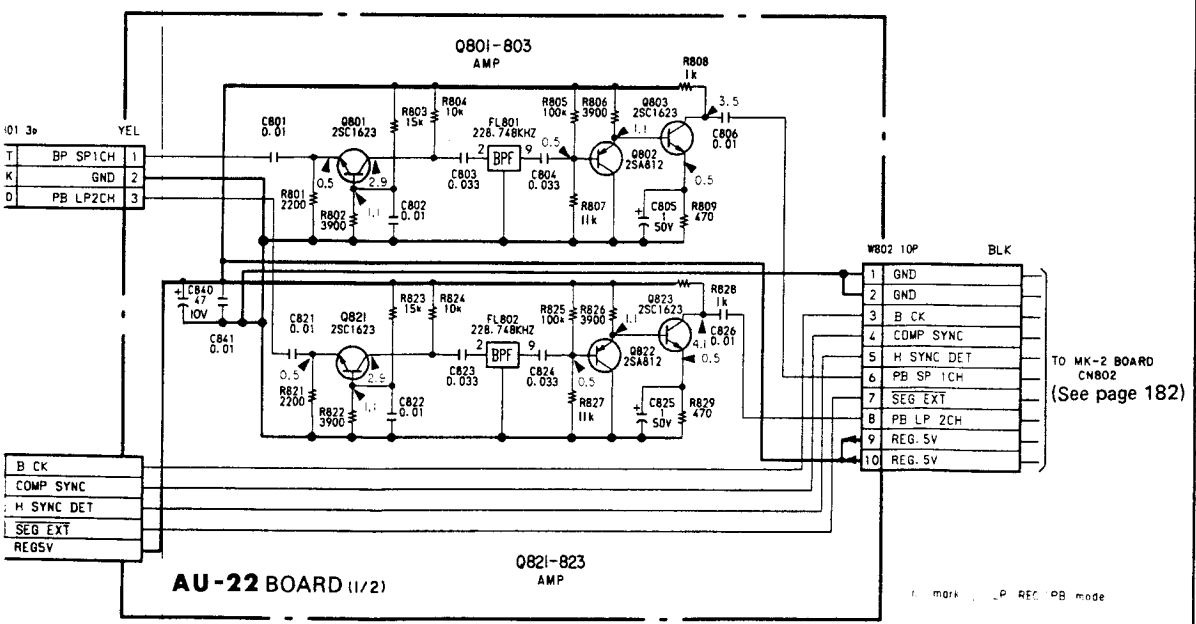


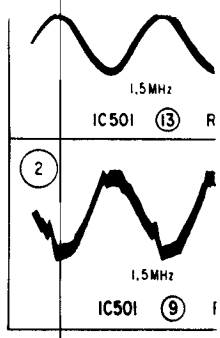


F G H I J K L M N O P

**Note:**

- ○— : indicates a lead wire mounted on the component side.
- ●— : indicates a lead wire mounted on the printed side.
- ⊗ : Through hole.
- : Pattern from the side which enables seeing.
- : Pattern of the rear side.
- : B+ pattern from the side which enables seeing.

When indicating parts by reference number, please include the board name.

**Caution:**

Pattern face side: (Solder Side) Parts on the pattern face side seen from the pattern face are indicated.

Parts face side: (Component Side) Parts on the parts face side seen from the parts face are indicated.

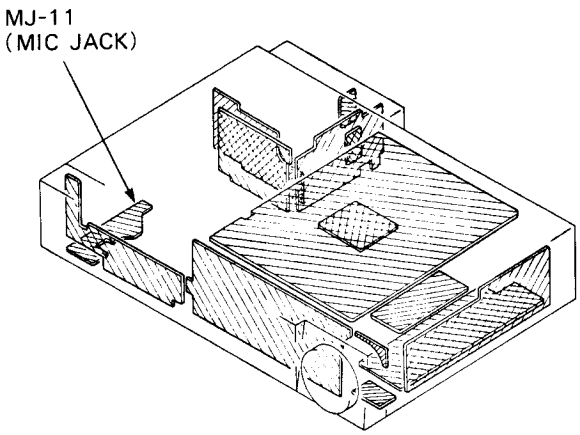


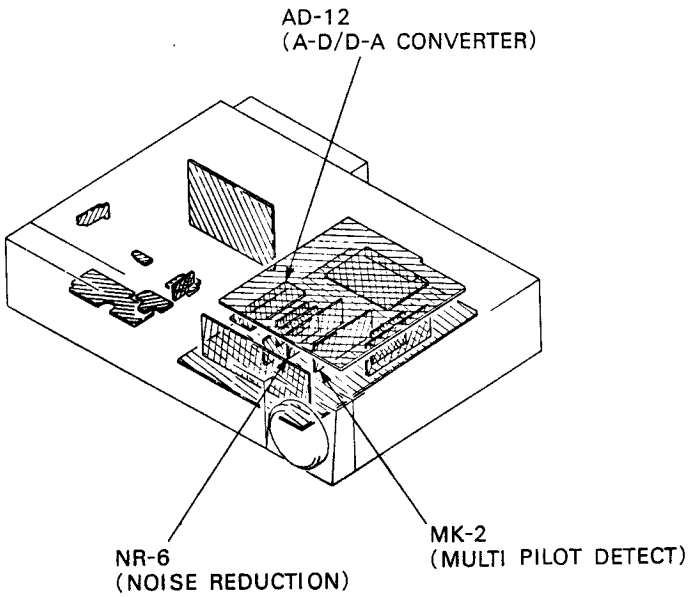


**IC701**
**AD-12 BOARD**

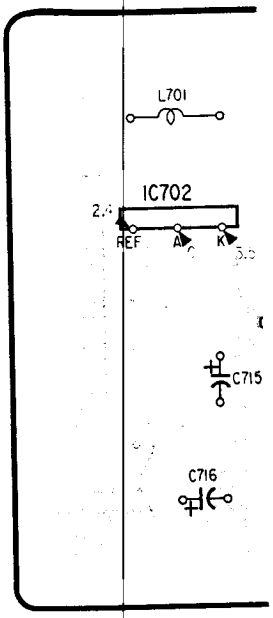


**IC701**
**AD-12 BOARD**

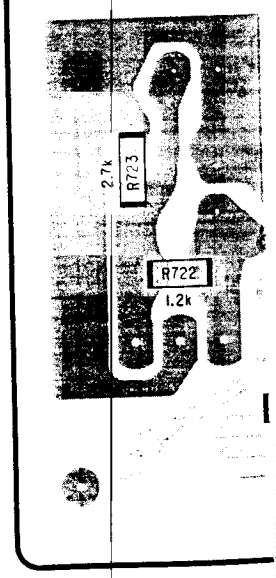

the component side.
the printed side.

es seeing.

ables seeing.

face side seen from
dicated.
ace side seen from
cated.

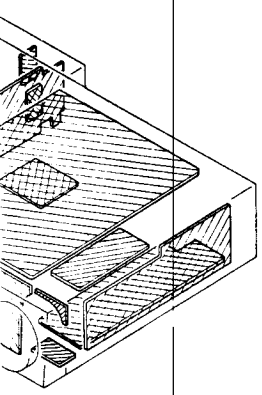

AD-12
A-D/D-A CONVERTER)

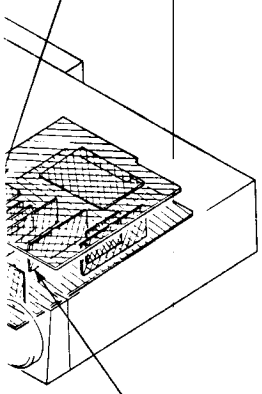

MK-2
(MULTI PILOT DETECT)

ION)

**IC701**
**AD-12** BOARD (COMPONENT SIDE)

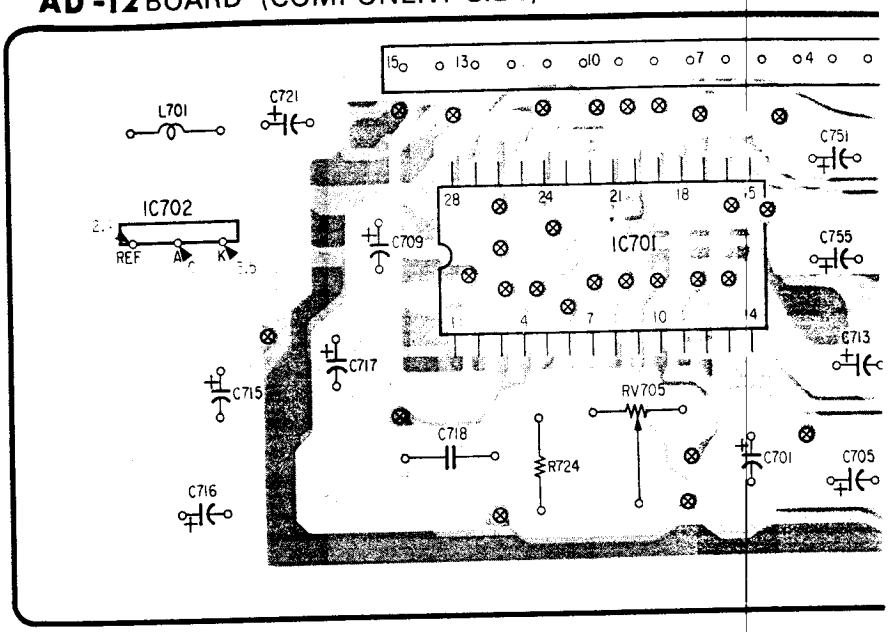


**IC701**
**AD-12** BOARD (SOLDER SIDE)

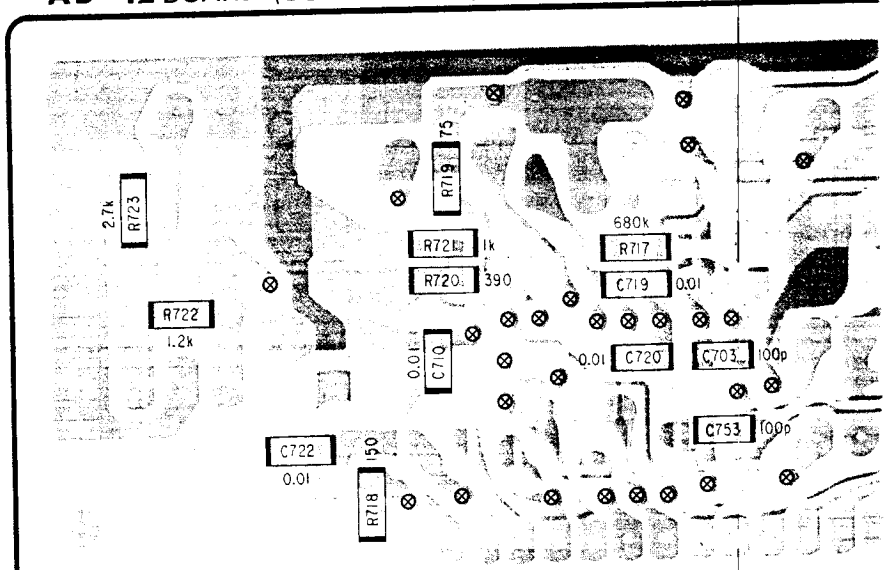

SIDE)

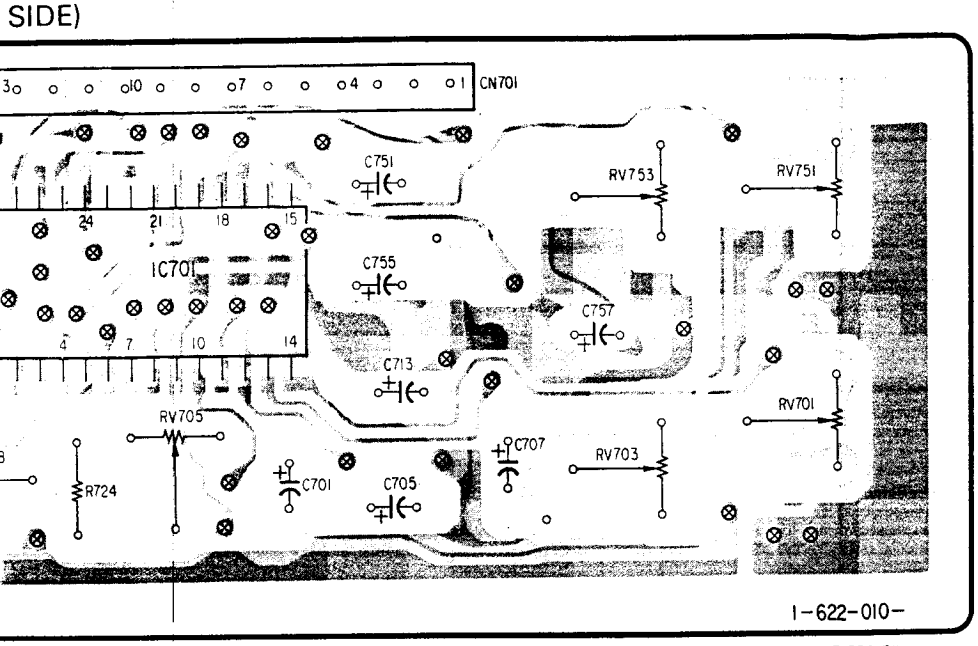


E)

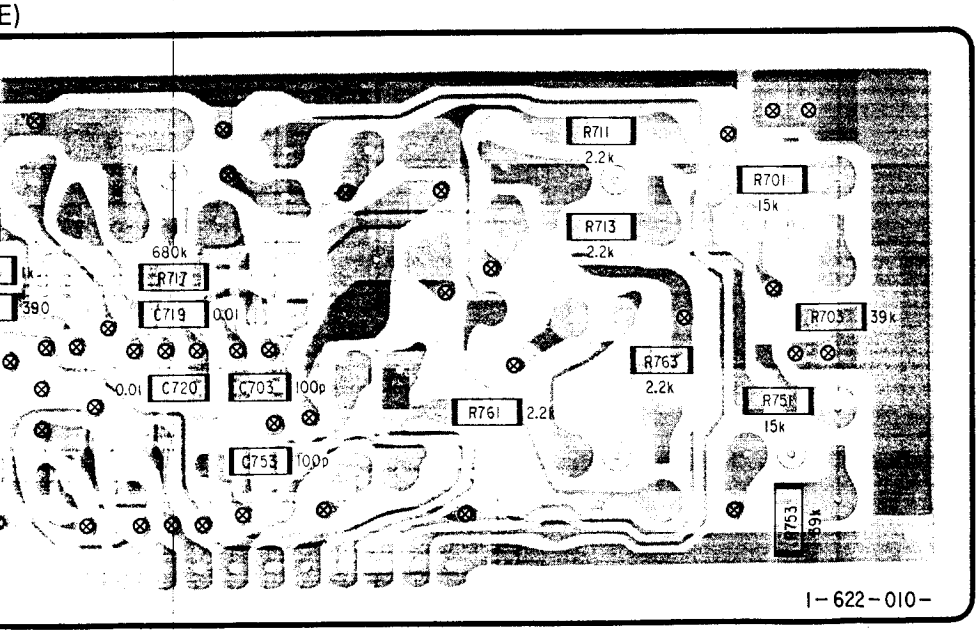


**IC601**
**NR-6** BOARD (COM

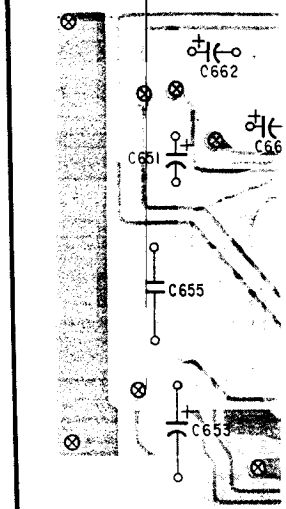


**IC601**
**NR-6** BOARD (SOLI

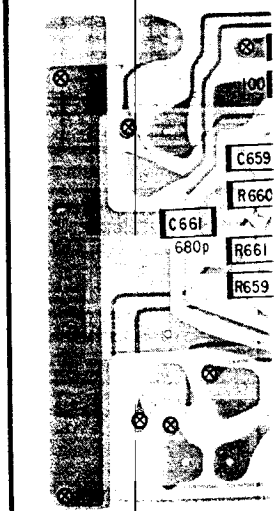

## IC601
## NR-6 BOARD (COMPONENT SIDE)

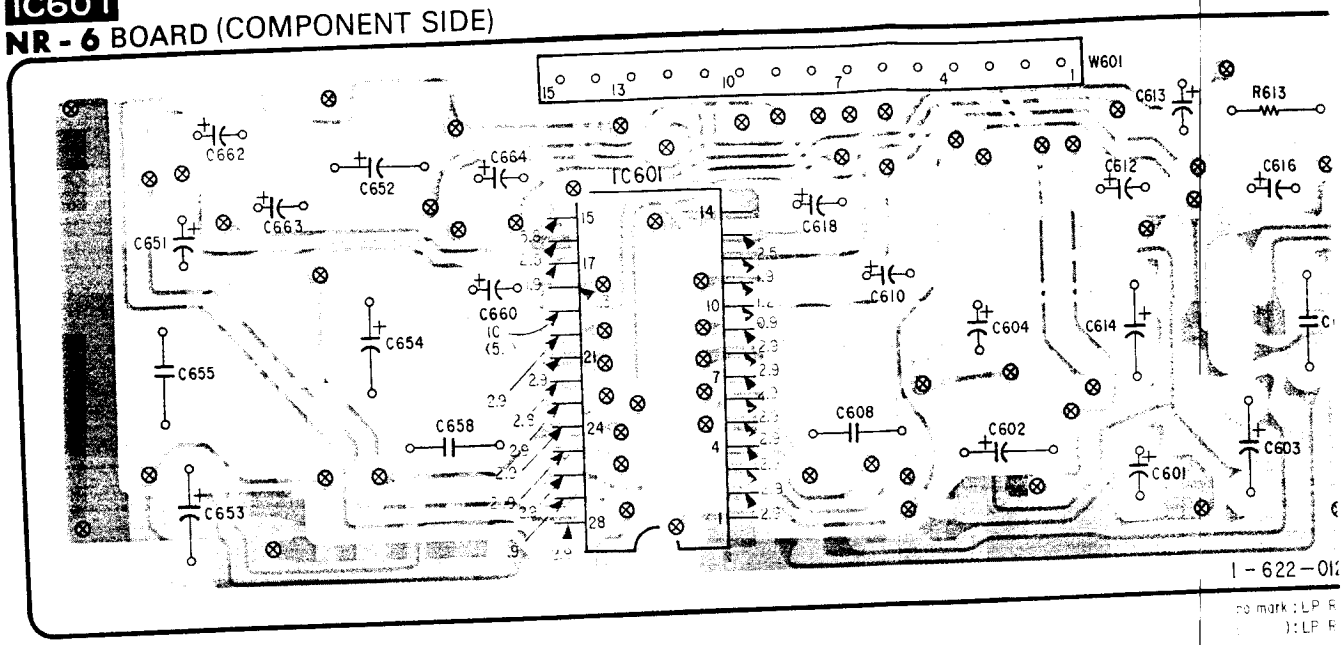


## IC601
## NR-6 BOARD (SOLDER SIDE)

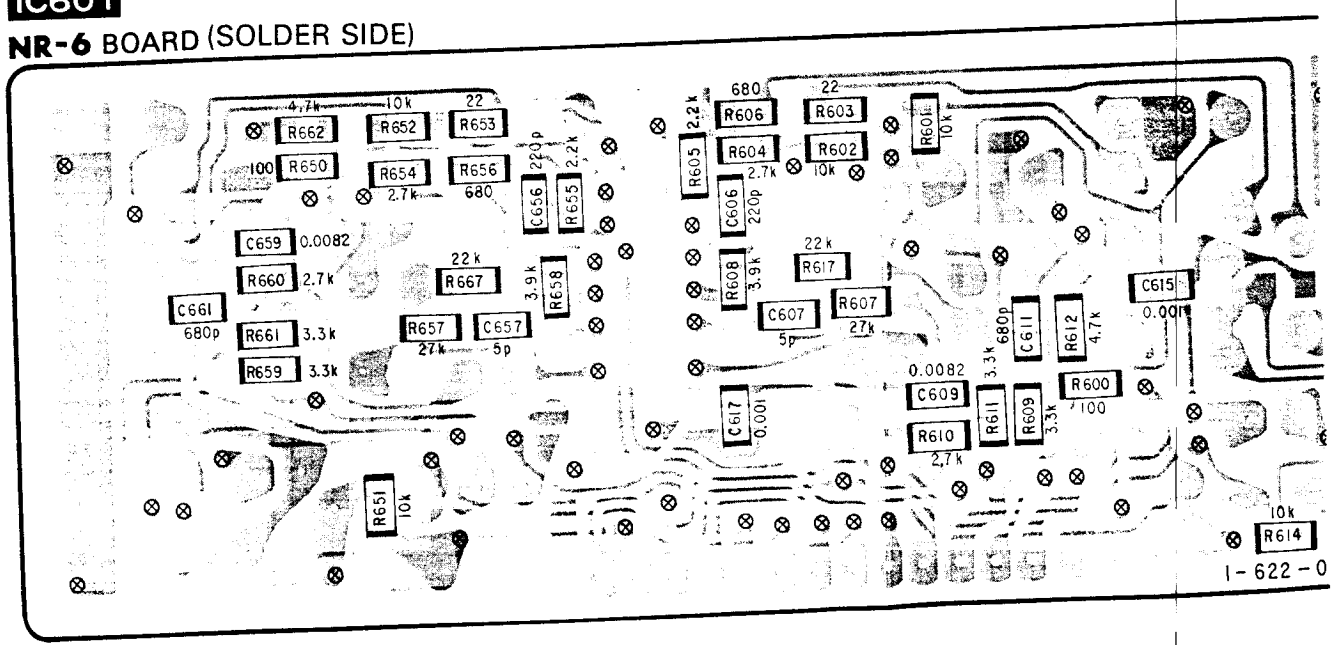

## MK-2 BOARD

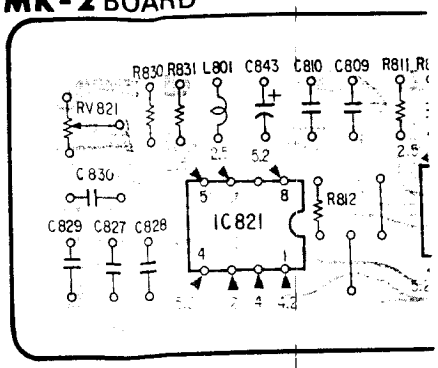


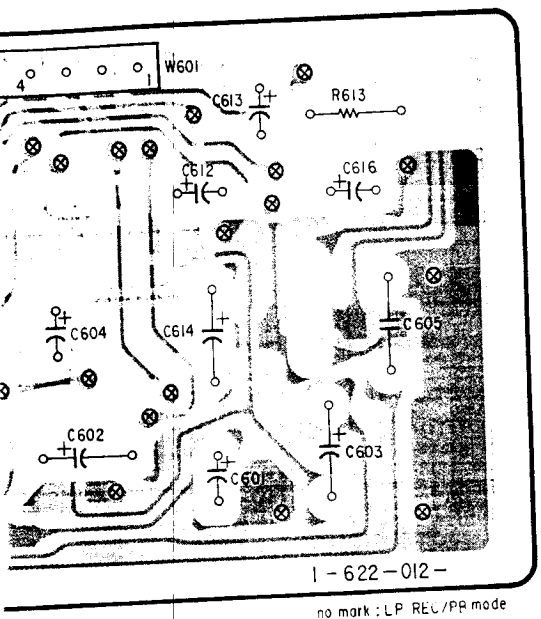


II

no mark : LP REC/PB mode
( ) : LP REC mode
( ) : LP PB mode

## MJ-11BOARD

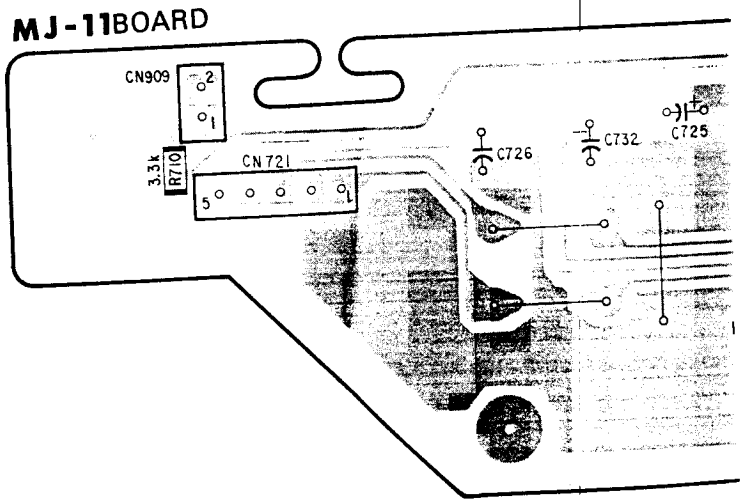


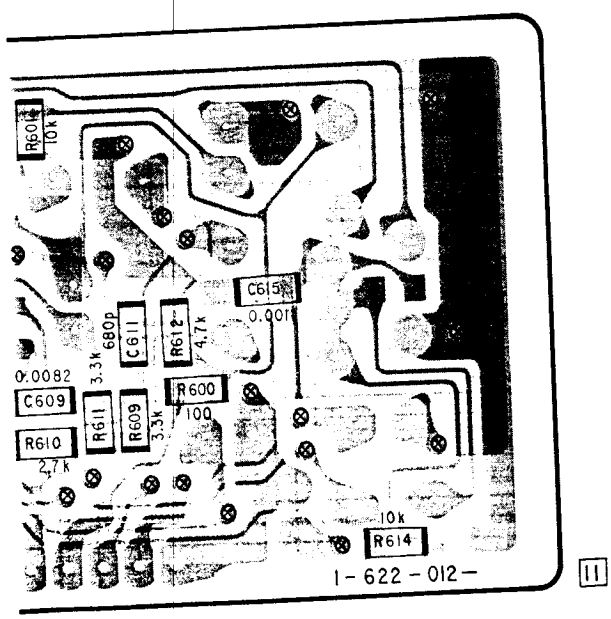


II

## -2 BOARD

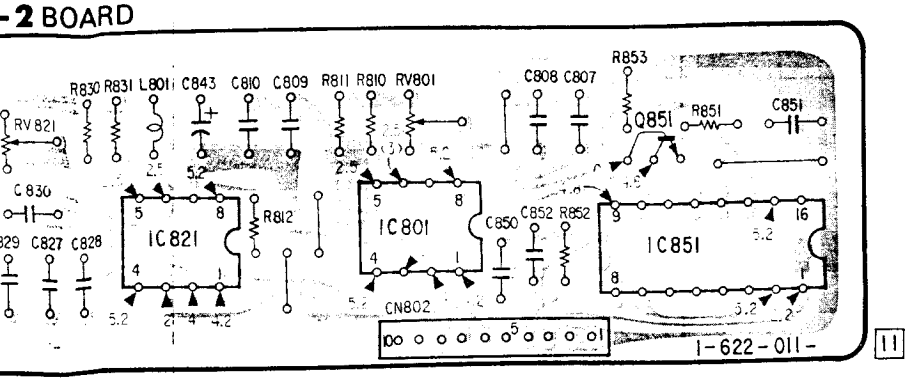


no mark : LP REC / PB mode
( ) : LP REC mode
[ ] : LP PB mode

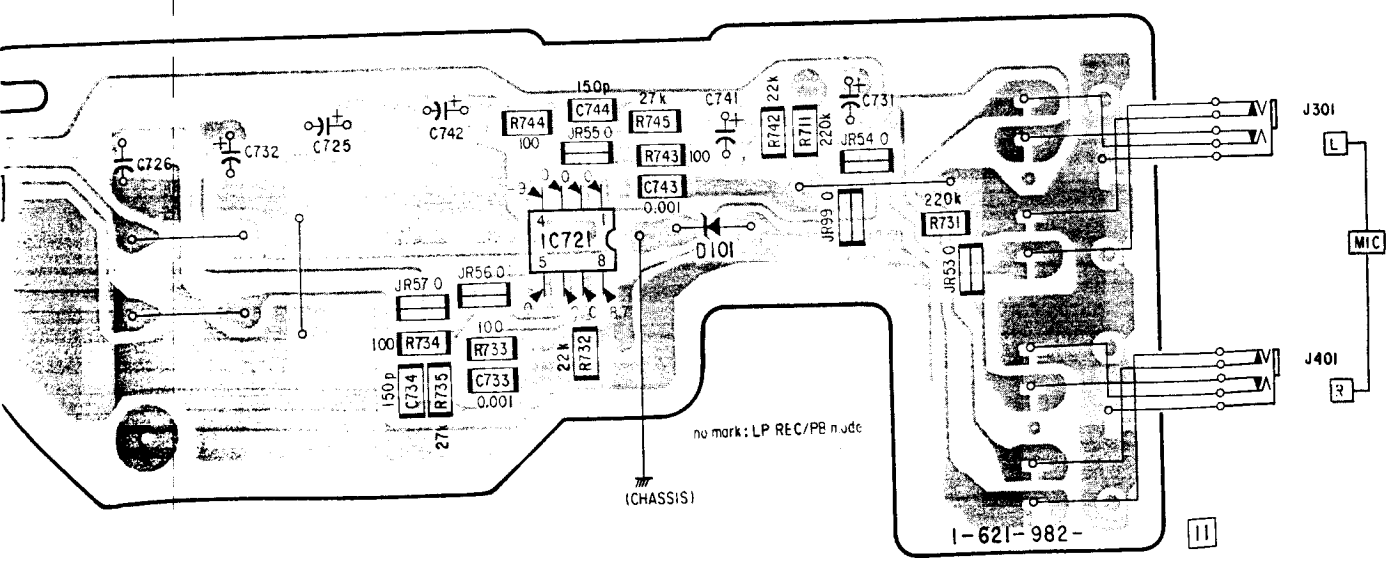

## AD-12(A-D/D-A CONVERTER), NR-6(NOISE REDUCTION), MK-2(MULTI PILOT DETECT), MJ-11(MIC JACK) s

—Ref. No. AD-12 BOARD, NR-6 BOARD, MK-2 BOARD, MJ-11 BOARD : 8,000 series—

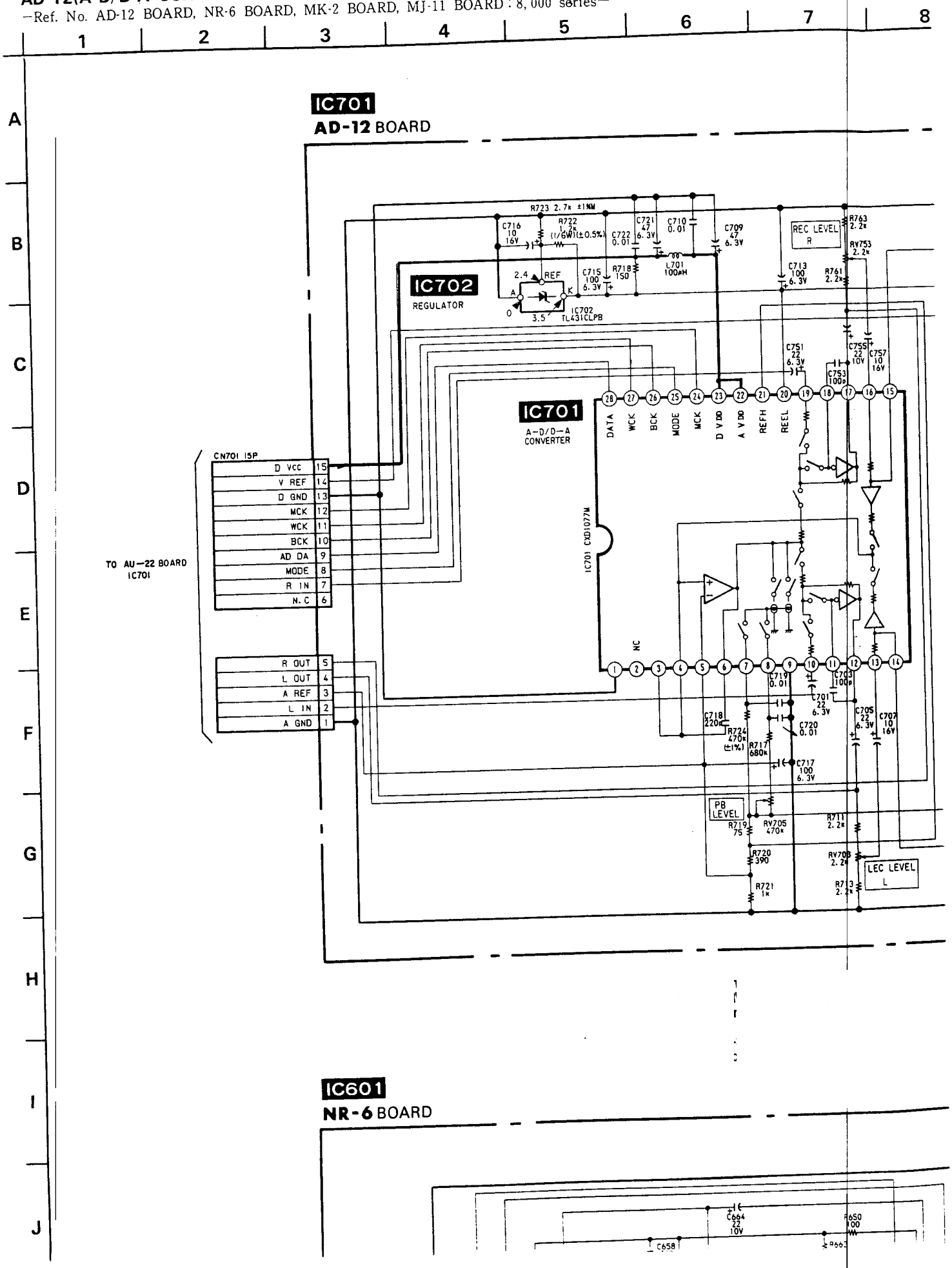

4 | 5 | 6 | 7 | 8 | 9 | 10 | 11

01
12 BOARD

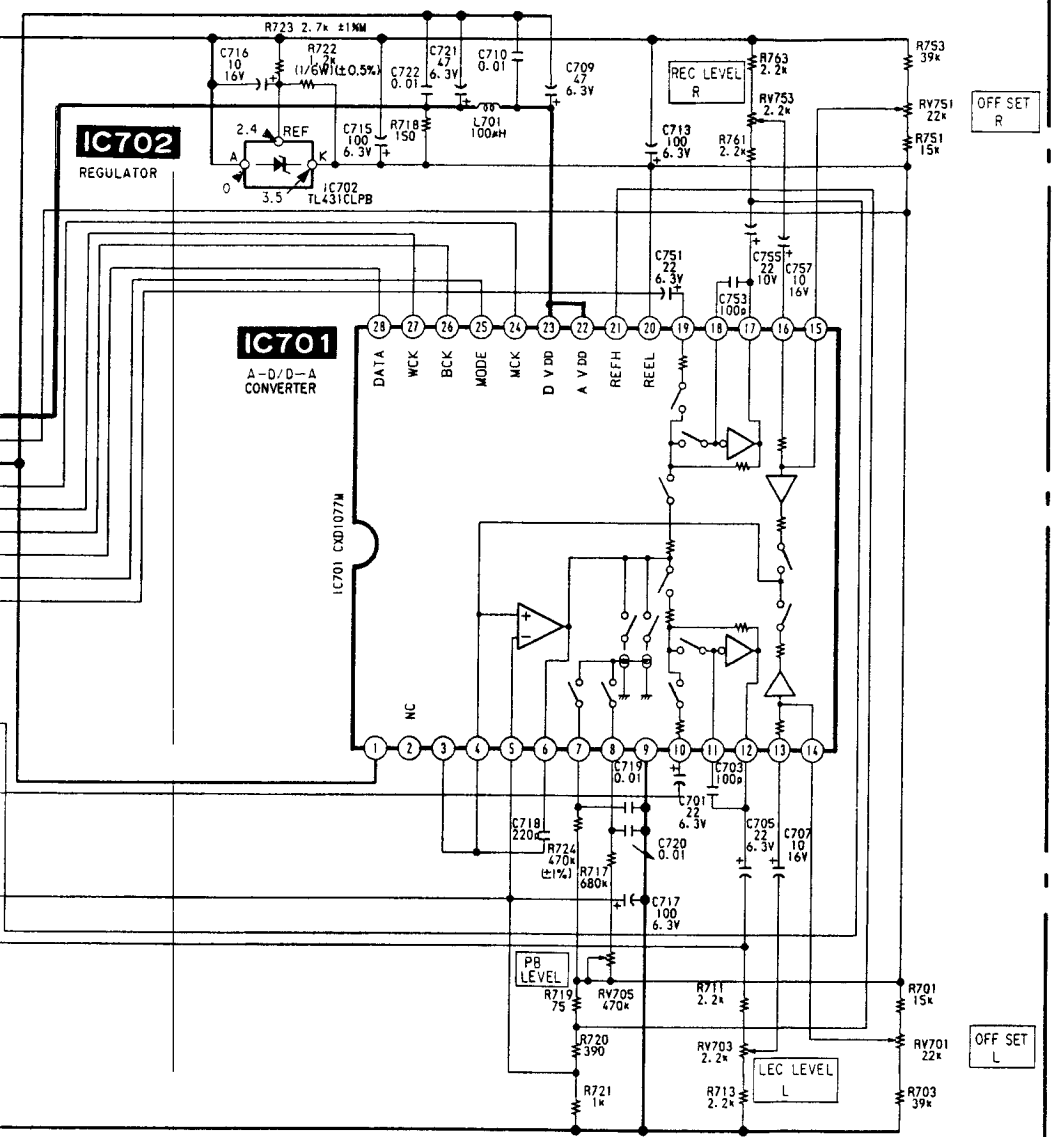


TO AU-22
BOARD
W802
(See page 174)

no mark : LP REC/PB mode

OARD

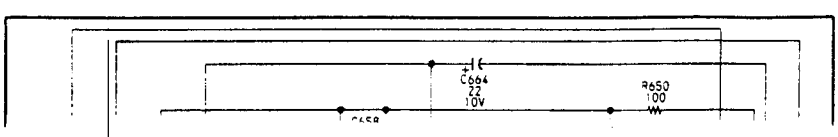

DIAGRAM

9 | 10 | 11 | 12 | 13 | 14 | 15 | 16 | 1

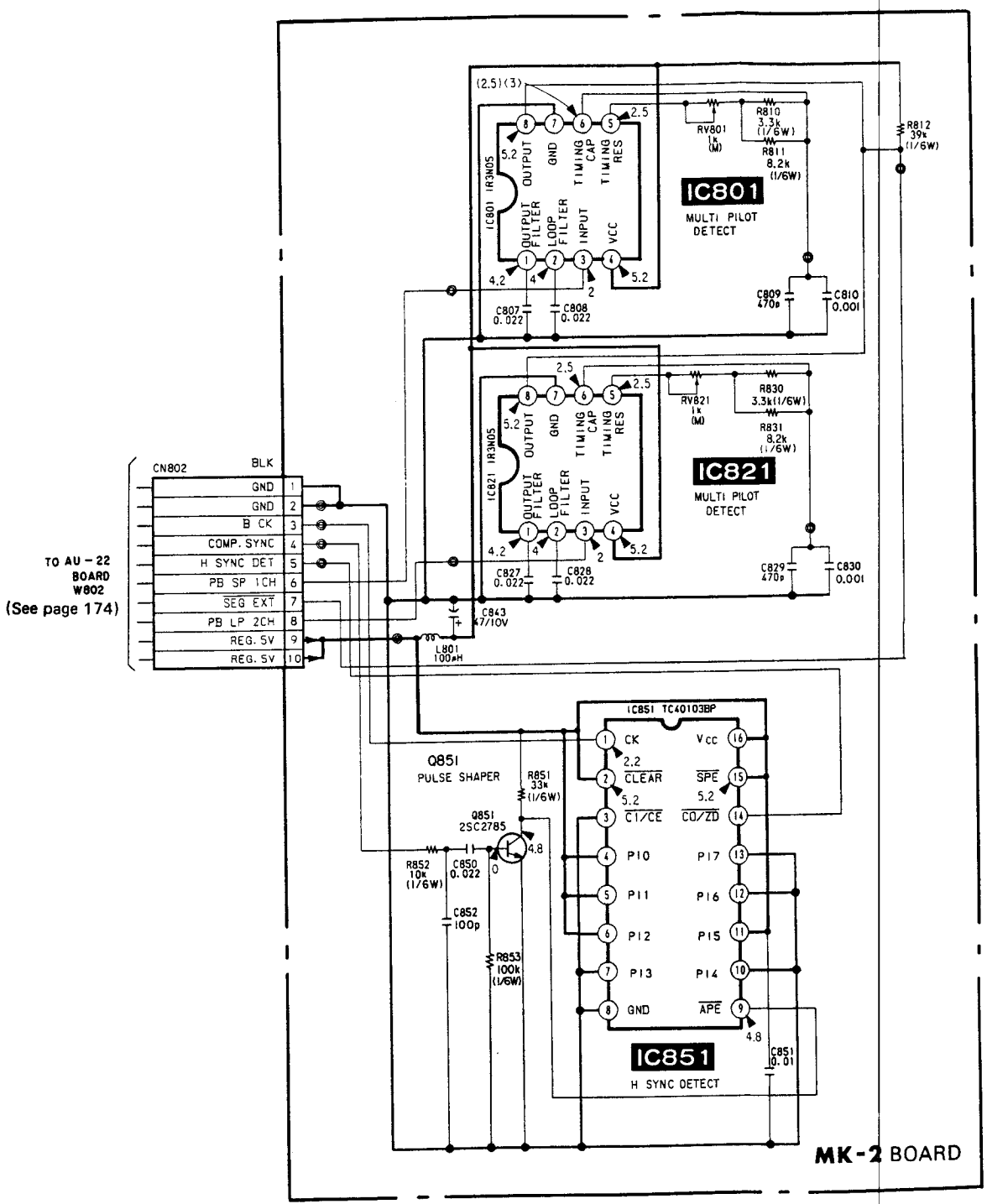


no mark : LP REC/PB mode

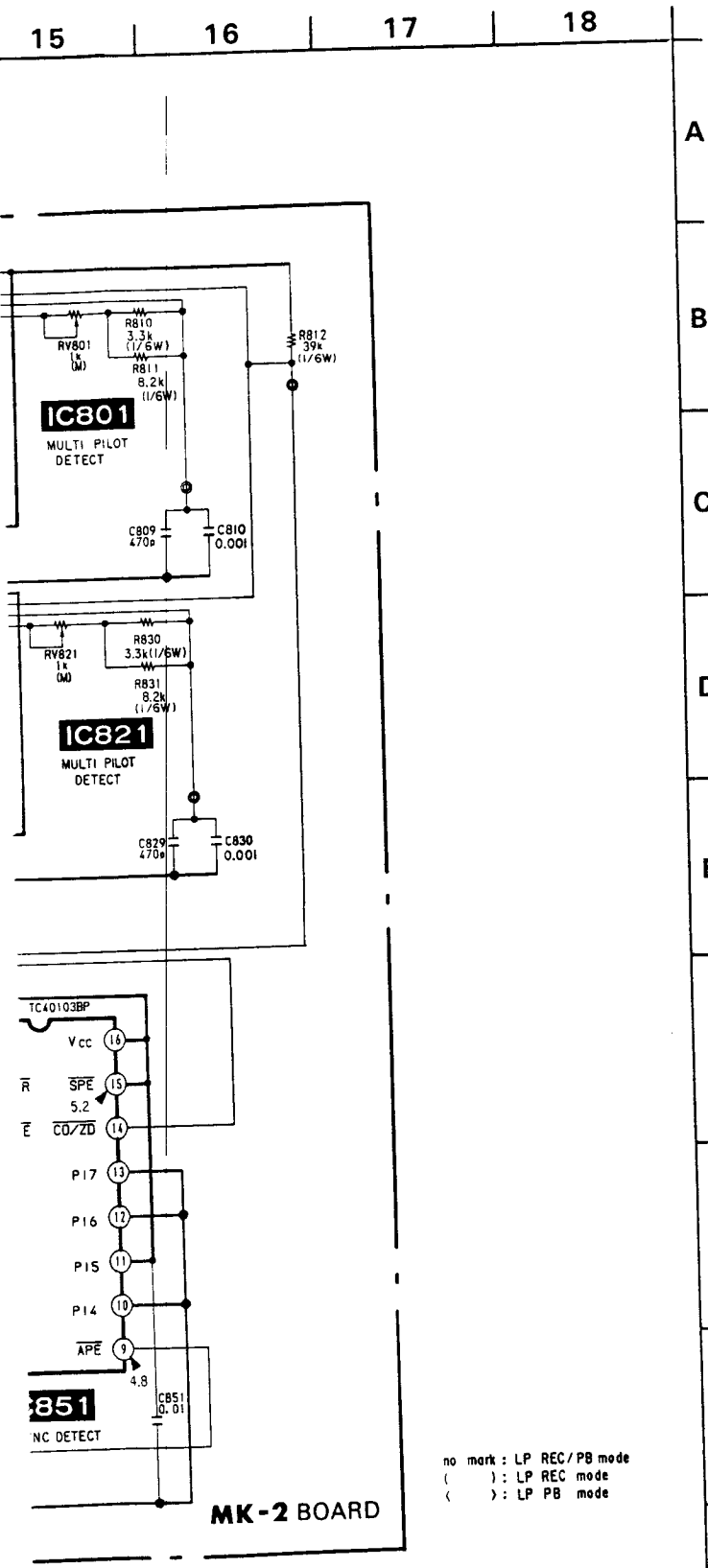


**Note:**

- Caution when replacing chip parts.
  New parts must be attached after removal of chip.
  Be careful not to heat the minus side of tantalum capacitor, because it is damaged by the heat.
- All resistors are in ohms, 1/10W unless otherwise noted.
  kΩ: 1000Ω, MΩ: 1000kΩ.
- All capacitors are in μF unless otherwise noted. pF : μμF.
  50V or less are not indicated except for electrolytice. and tantalums.
- All variable and adjustable resistors have characteristic curve B, unless otherwise noted.
- ▭ : panel designation.
- ▭ : adjustment for repair.
- ——— : B + bus.
- – – – : B – bus.
- Voltages are dc with respect to ground unless otherwise noted.
- Readings are taken with a colour-bar signal input.
- Readings are taken with a digital multimeter (DC10MΩ).
- Voltage variations may be noted due to normal production tolerances.

When indicating parts by reference number, please include the board name.

- **Signal path**

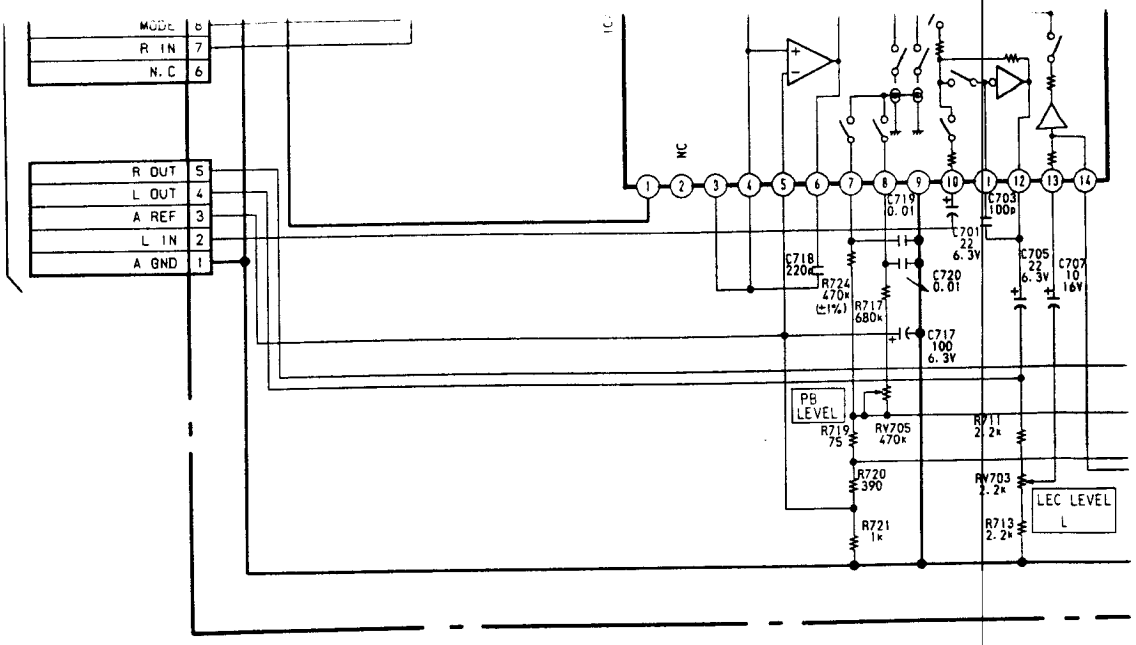


**IC601**

**NR-6** BOARD

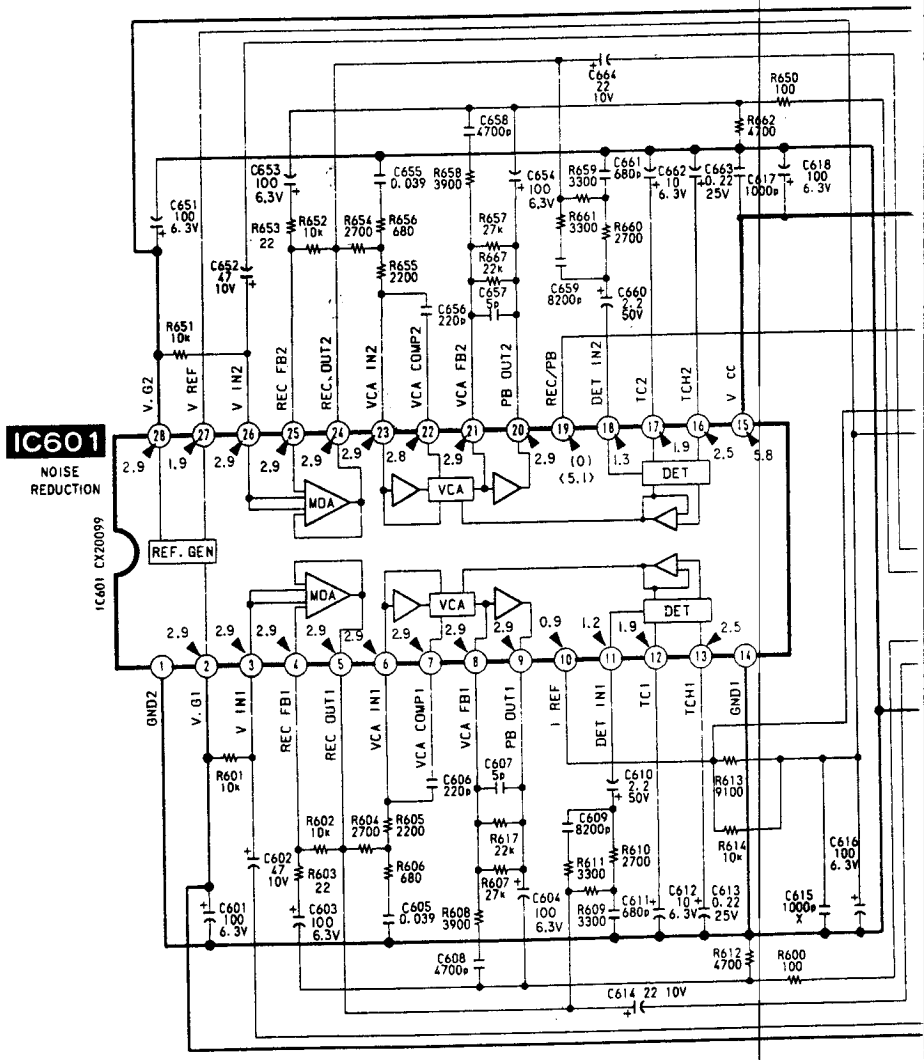

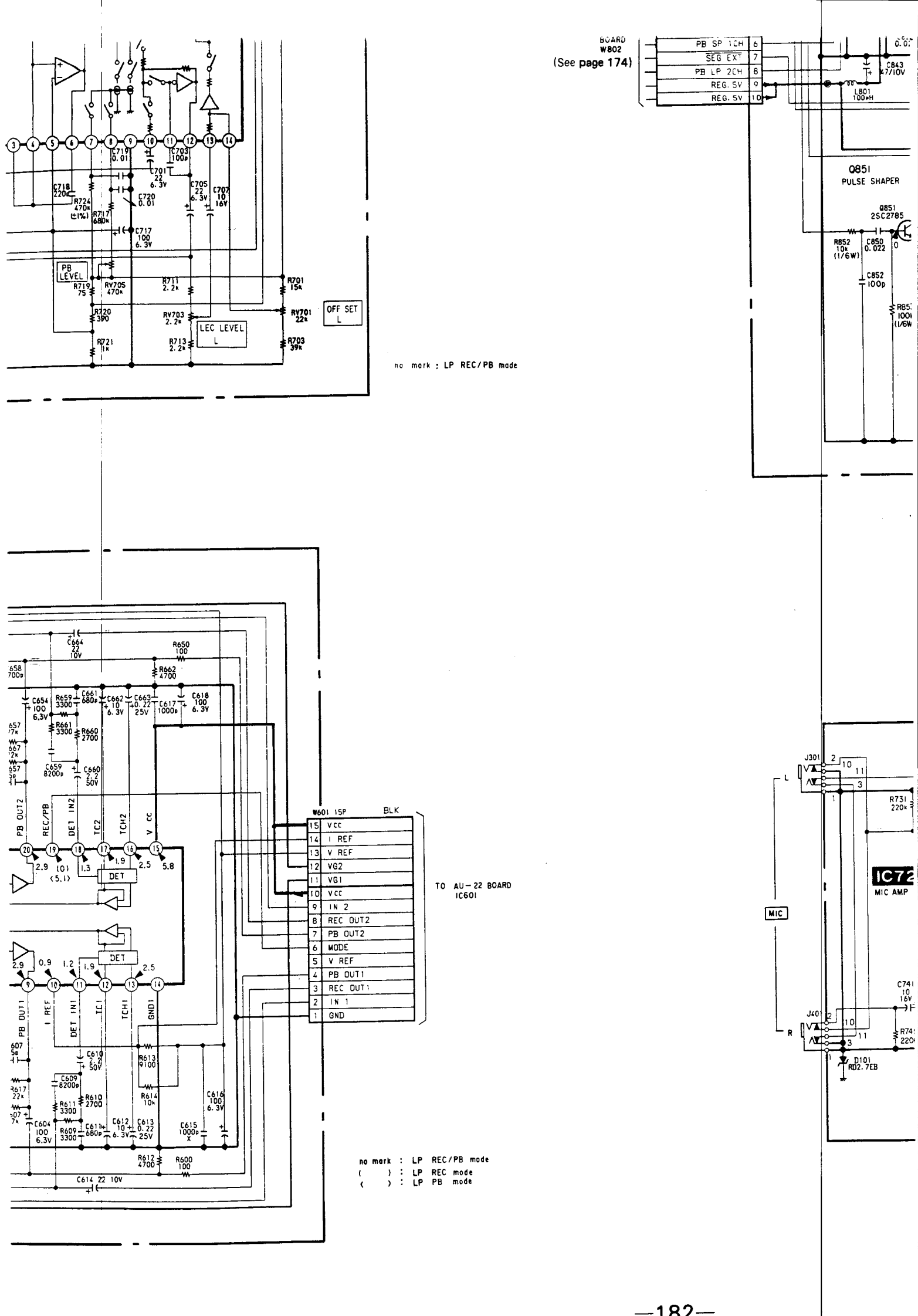
BOARD
W802
(See page 174)
PB SP 1CH 6
SEG EXT 7
PB LP 2CH 8
REG. 5V 9
REG. 5V 10
C843 47/10V
L801 100μH
Q851
PULSE SHAPER
Q851 2SC2785
R852 10k (1/6W)
C850 0.022
C852 100p
C719 0.01
C703 100p
C701 22 6.3V
C718 220
C705 22 6.3V
C707 10 16V
R724 470k (±1%)
R717 680k
C720 0.01
C717 100 6.3V
PB LEVEL
R719 75
RV705 470k
R711 2.2k
R701 15k
R720 390
RV703 2.2k
RV701 22k
OFF SET L
R721 1k
R713 2.2k
LEC LEVEL L
R703 39k
no mark : LP REC/PB mode
C664 22 10V
R650 100
R662 4700
C654 100 6.3V
R659 3300
C661 680p
C662 10 6.3V
C663 0.22 25V
C617 1000p
C618 100 6.3V
R661 3300
R660 2700
C659 8200p
C660 2.2 50V
PB OUT2
REC/PB
DET IN2
TC2
TCH2
V CC
2.9 (0) (5.1) 1.3 1.9 2.5 5.8
DET
W601 15P BLK
15 VCC
14 I REF
13 V REF
12 VG2
11 VG1
10 VCC
9 IN 2
8 REC OUT2
7 PB OUT2
6 MODE
5 V REF
4 PB OUT1
3 REC OUT1
2 IN 1
1 GND
TO AU-22 BOARD IC601
2.9 0.9 1.2 1.9 2.5
PB OUT1
I REF
DET IN1
TC1
TCH1
GND1
C610 2.2 50V
R613 9100
C609 8200p
R610 2700
R614 10k
C616 100 6.3V
R611 3300
C604 100 6.3V
R609 3300
C611 680p
C612 10 6.3V
C613 0.22 25V
C615 1000p X
R612 4700
R600 100
C614 22 10V
no mark : LP REC/PB mode
( ) : LP REC mode
( ) : LP PB mode
J301
L
R731 220k
IC72
MIC AMP
MIC
C741 10 16V
J401
R
R74 220
D101 RD2.7EB

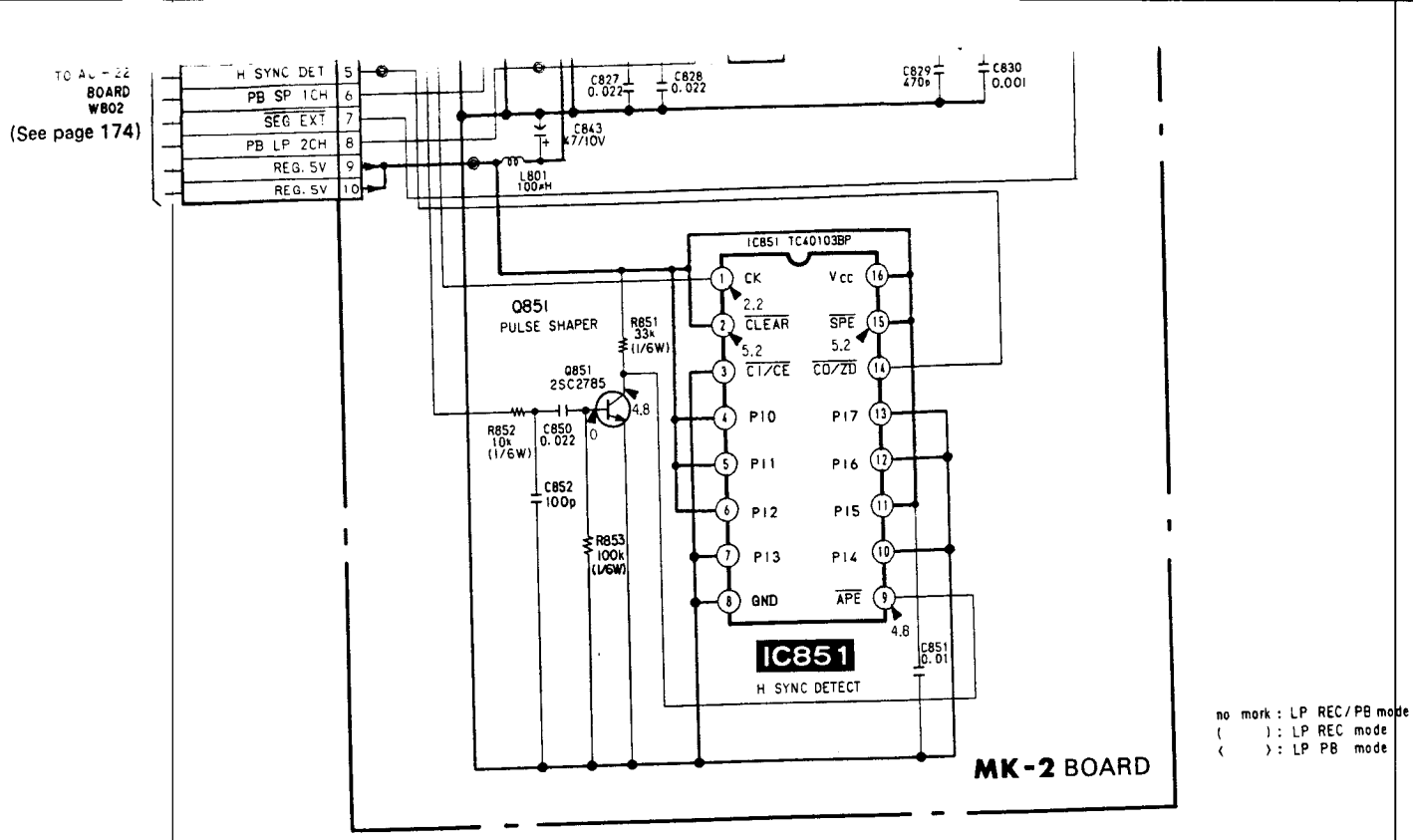
TO AU-22 BOARD W802
(See page 174)
H SYNC DET 5
PB SP 1CH 6
SEG EXT 7
PB LP 2CH 8
REG. 5V 9
REG. 5V 10
C827 0.022
C828 0.022
C829 470p
C830 0.001
C843 47/10V
L801 100μH
IC851 TC40103BP
CK
CLEAR
CI/CE
P10
P11
P12
P13
GND
Vcc
SPE
CO/ZD
P17
P16
P15
P14
APE
Q851 PULSE SHAPER
Q851 2SC2785
R851 3.3k (1/6W)
R852 10k (1/6W)
C850 0.022
C852 100p
R853 100k (1/6W)
C851 0.01
IC851
H SYNC DETECT
MK-2 BOARD
no mark : LP REC/PB mode
( ) : LP REC mode
( ) : LP PB mode

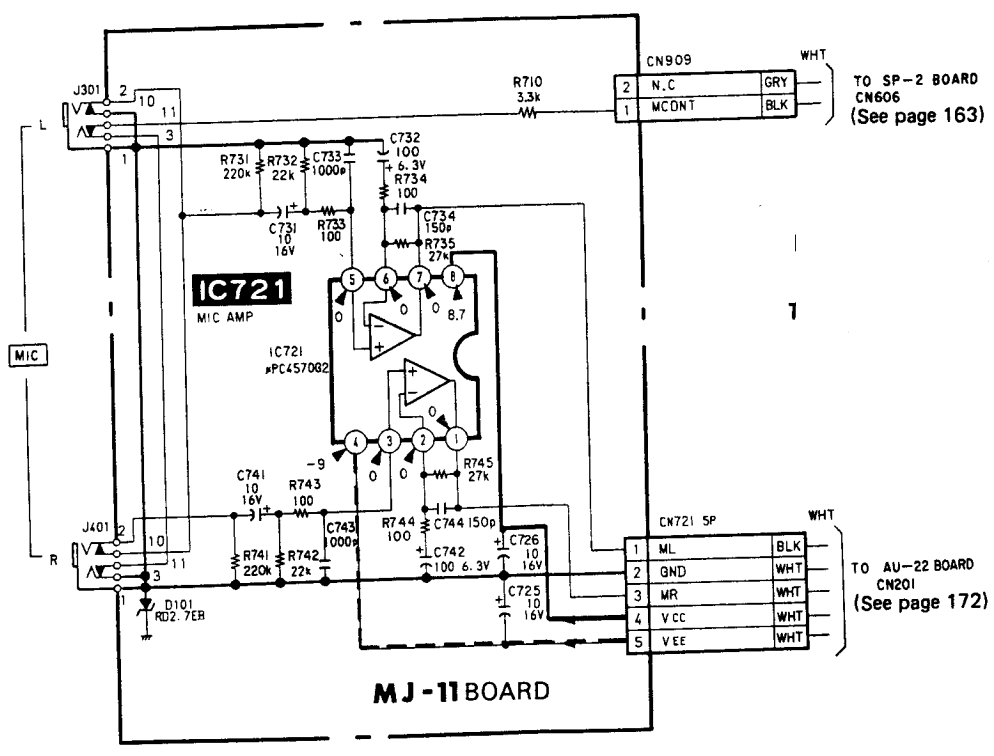
J301
J401
MIC
L
R
R710 3.3k
CN909
2 N.C GRY
1 MCONT BLK
WHT
TO SP-2 BOARD CN606
(See page 163)
C732 100 6.3V
R734 100
R731 220k
R732 22k
C733 1000p
C731 10 16V
R733 100
C734 150p
R735 27k
IC721
MIC AMP
IC721 μPC4570G2
R745 27k
C741 10 16V
R743 100
R744 100
C744 150p
C742 100 6.3V
C743 1000p
R741 220k
R742 22k
C726 10 16V
C725 10 16V
D101 RD2.7EB
CN721 5P
1 ML BLK
2 GND WHT
3 MR WHT
4 VCC WHT
5 VEE WHT
TO AU-22 BOARD CN201
(See page 172)
MJ-11 BOARD
no mark : LP REC/PB mode

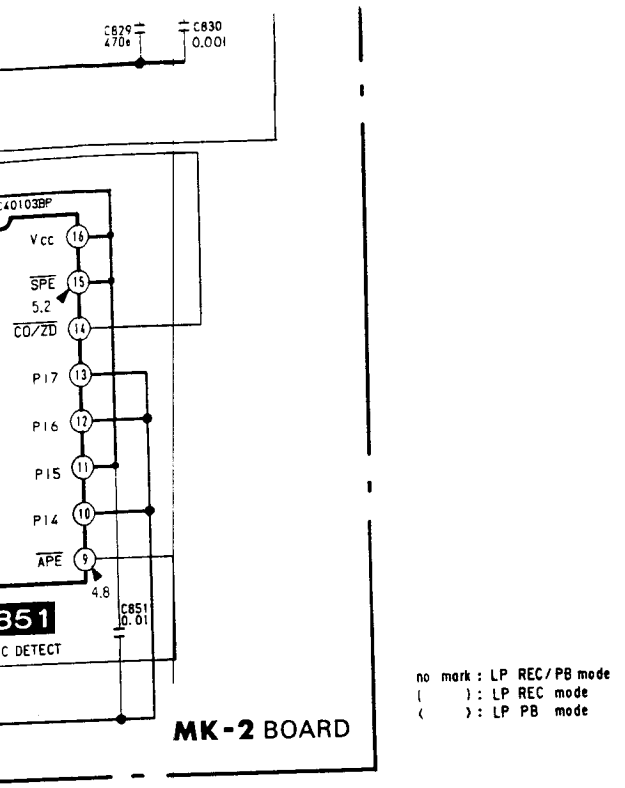


no mark : LP REC/PB mode
( ) : LP REC mode
( ) : LP PB mode

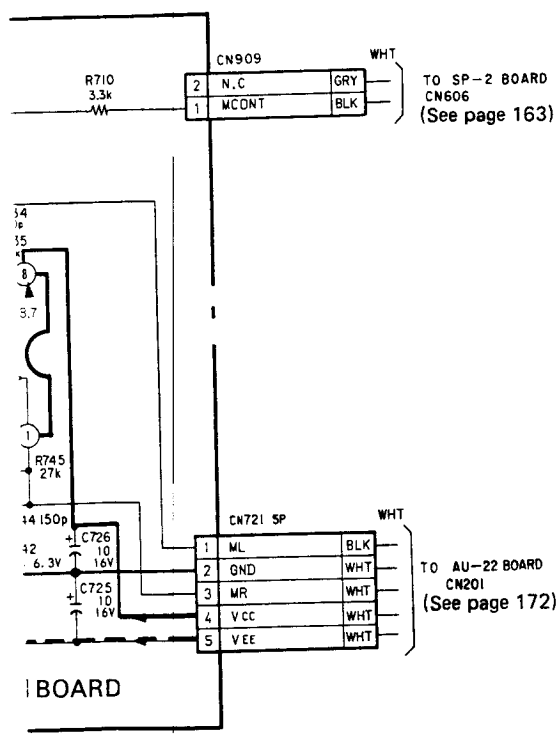


ork : LP REC/PB mode

**Note:**

- ○— : indicates a lead wire mounted on the component side.
- ●— : indicates a lead wire mounted on the printed side.
- ▒ : soldering side.
- : Pattern of conductor and silver ilectrode of soldering side.
- : B+ Pattern.
- Digital transistor (AF-20 : Q501, Q503) transistor with resistor refer to the AF-20 board schematic diagram for digital transistor.

When indicating parts by reference number, please include the board name.

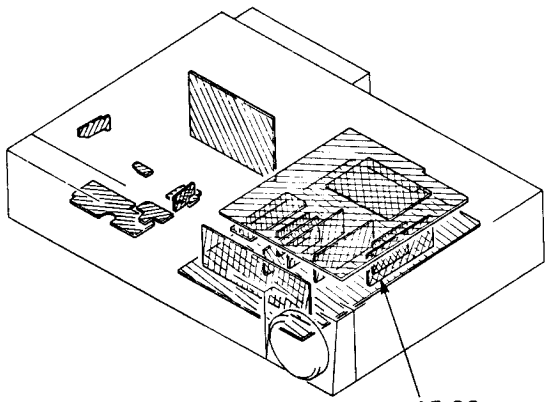

AF-20
(AFM MOD/DEMOD
NOISE REDUCTION)

1

**AF-20(AFM MOD/DEMOD NOISE REDUCTION) PRINTED WIRING BOARD**
–Ref. No. AF-20 BOARD : 8,000 series–

## IC501

## AF-20 BOARD

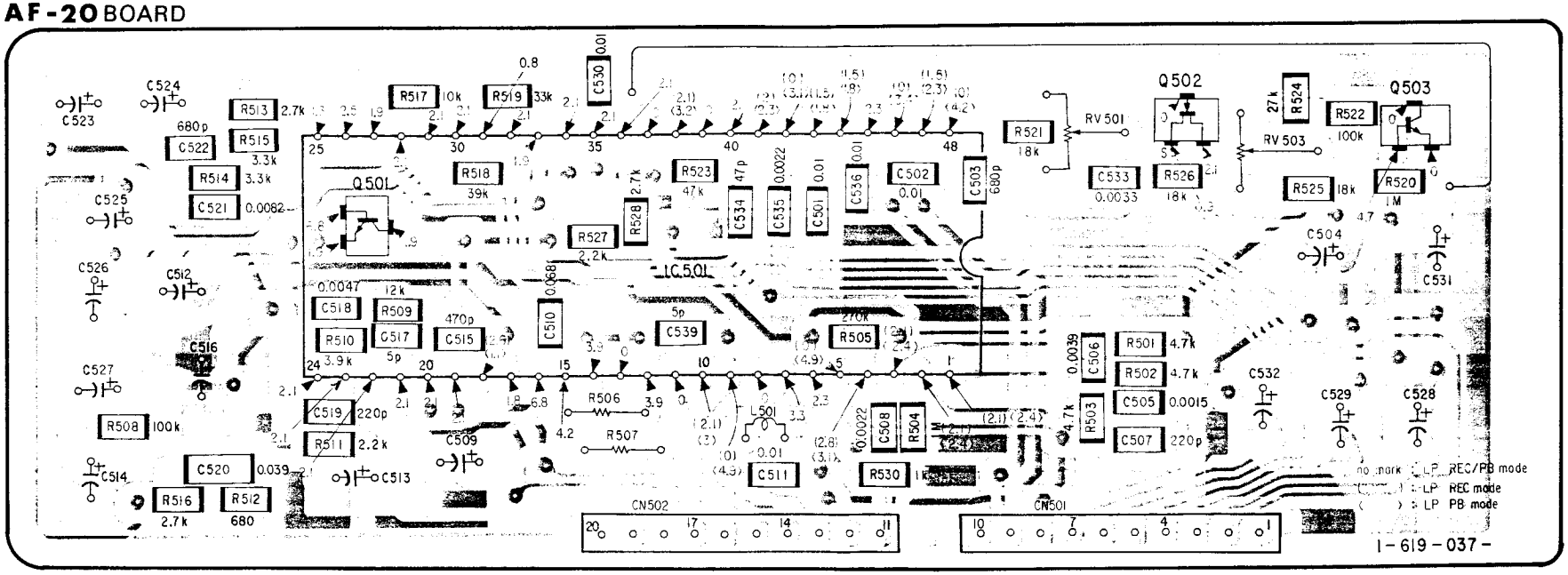

## AF-20(AFM MOD/DEMOD NOISE REDUCTION) SCHEMATIC DIAGRAM

—Ref. No. AF-20 BOARD : 8,000 series—

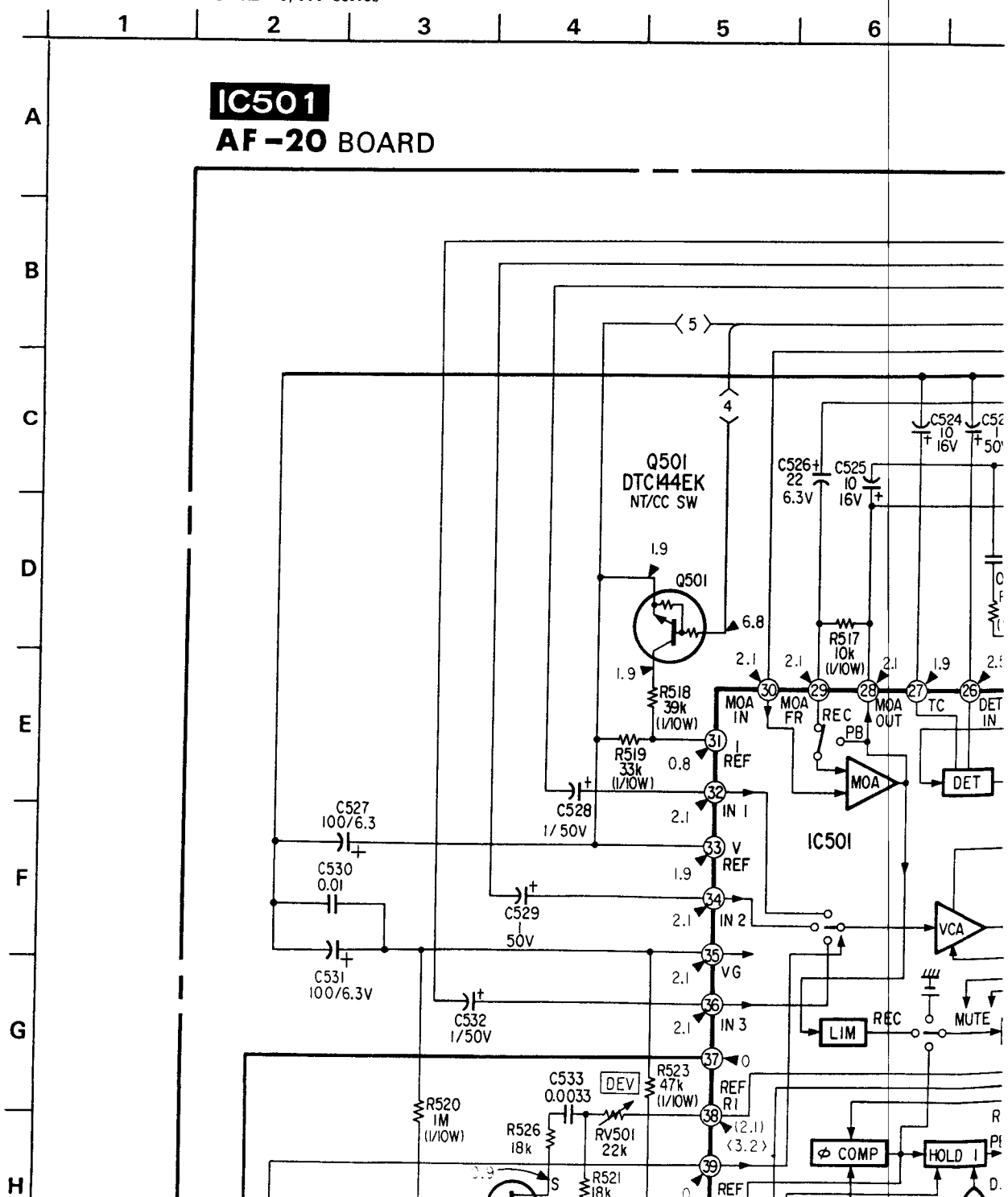

NOISE REDUCTION) SCHEMATIC DIAGRAM

) series—

3 4 5 6 7 8 9 10

D BOARD

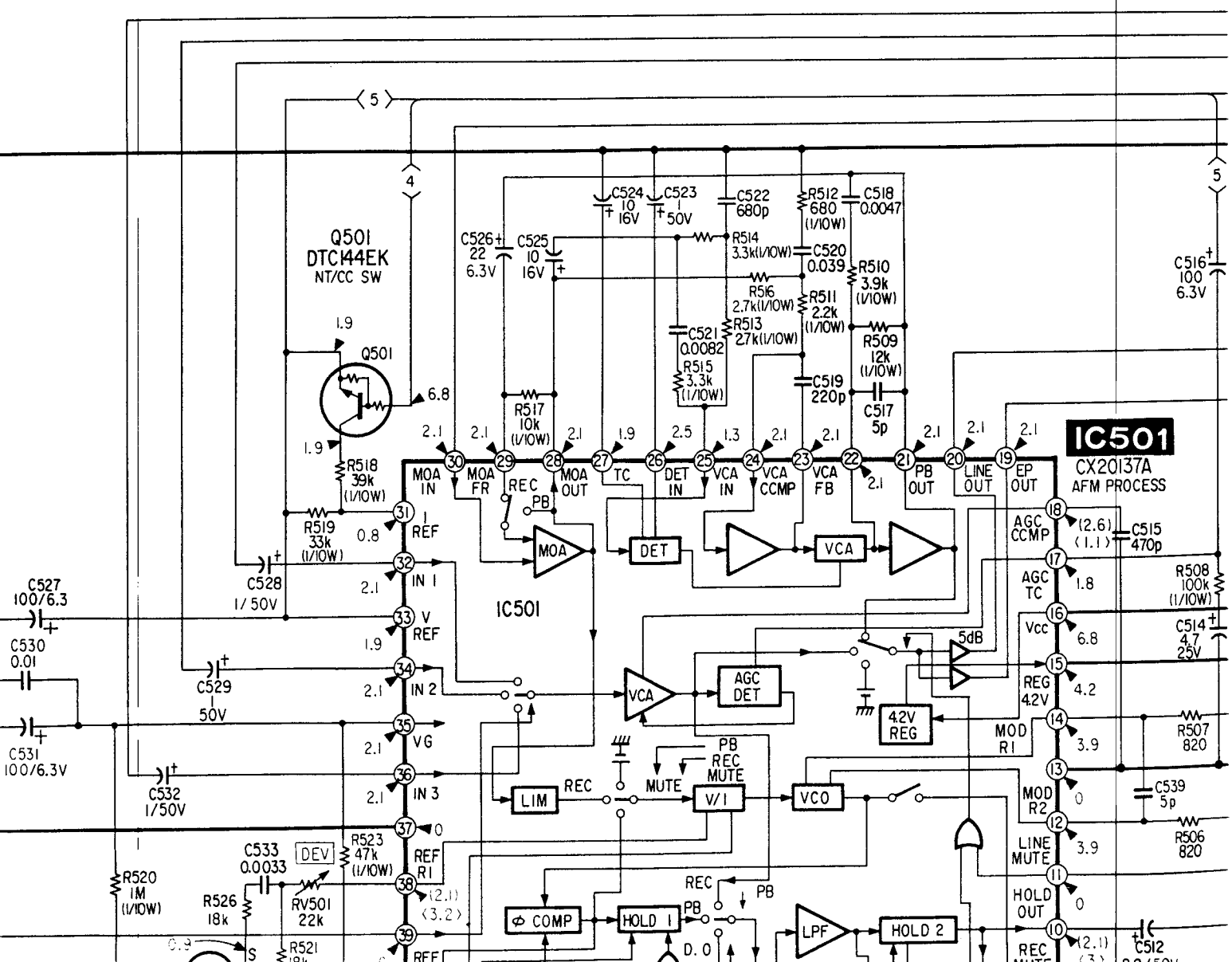

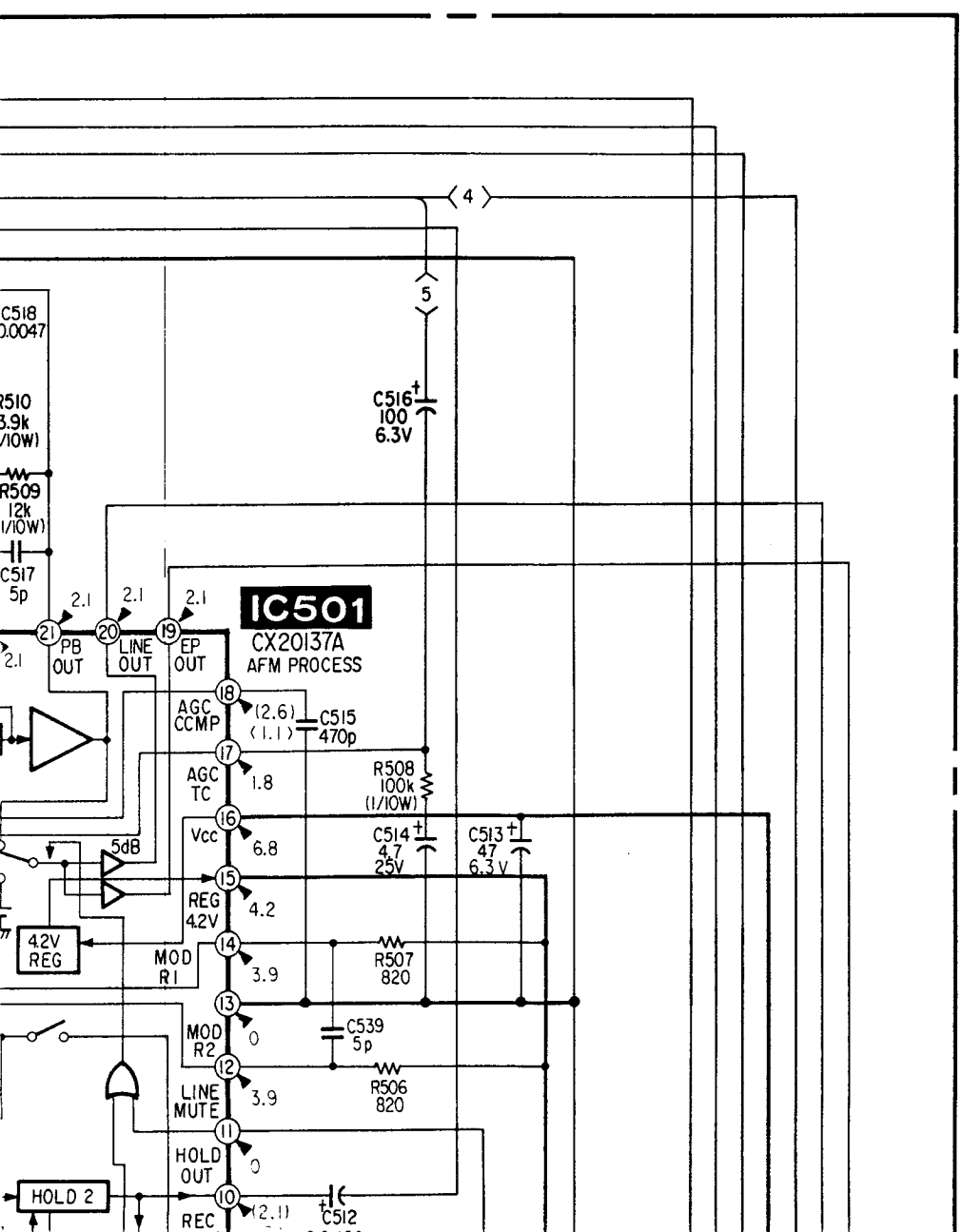
9
10
11
12
13
14
15
16
4
5
C516
100
6.3V
C518
0.0047
R510
3.9k
(1/10W)
R509
12k
(1/10W)
C517
5p
IC501
CX20137A
AFM PROCESS
21 PB OUT 2.1
20 LINE OUT 2.1
19 EP OUT 2.1
18 AGC CCMP (2.6) (1.1) C515 470p
17 AGC TC 1.8
R508
100k
(1/10W)
16 Vcc 6.8
C514
4.7
25V
C513
47
6.3V
5dB
15 REG 4.2V 4.2
4.2V REG
14 MOD R1 3.9
R507
820
13 MOD R2 0
C539
5p
12 LINE MUTE 3.9
R506
820
11 HOLD OUT 0
HOLD 2
10 REC (2.1)
C512

4 | 15 | 16

A

B

C

D

E

F

G

H

**Note:**

- Caution when replacing chip parts.
  New parts must be attached after removal of chip.
  Be careful not to heat the minus side of tantalum capacitor, because it is damaged by the heat.
- All resistors are in ohms, 1/10W unless otherwise noted.
  kΩ: 1000Ω, MΩ: 1000kΩ.
- All capacitors are in μF unless otherwise noted. pF : μμF.
  50V or less are not indicated except for electrolytice. and tantalums.
- All variable and adjustable resistors have characteristic curve B, unless otherwise noted.
- ▭ : adjustment for repair.
- ▬ : B + bus.
- Voltages are dc with respect to ground unless otherwise noted.
- Readings are taken with a colour-bar signal input.
- Readings are taken with a digital multimeter (DC10MΩ).
- Voltage variations may be noted due to normal production tolerances.

When indicating parts by reference number, please include the board name.

- **Signal path**

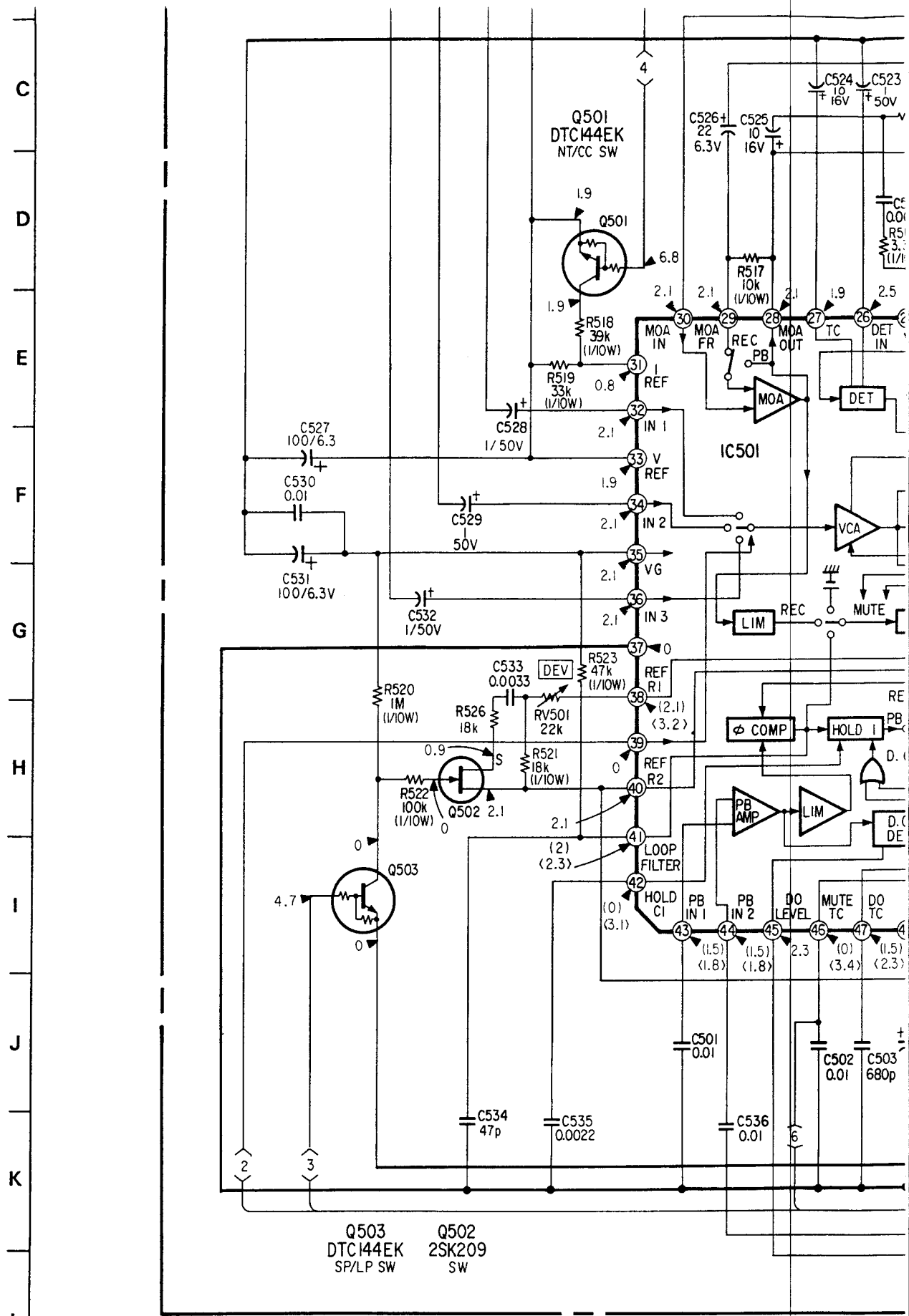
Q501
DTC144EK
NT/CC SW
Q501
R517
10k
(1/10W)
R518
39k
(1/10W)
R519
33k
(1/10W)
C524
10
16V
C523
1
50V
C526
22
6.3V
C525
10
16V
MOA
IN
MOA
FR
REC
PB
MOA
OUT
TC
DET
IN
REF
IN 1
V
REF
IN 2
VG
IN 3
MOA
DET
IC501
C527
100/6.3
C528
1/50V
C529
50V
C530
0.01
C531
100/6.3V
C532
1/50V
VCA
LIM
REC
MUTE
C533
0.0033
DEV
R523
47k
(1/10W)
RV501
22k
R526
18k
R520
1M
(1/10W)
R521
18k
(1/10W)
R522
100k
(1/10W)
Q502
2SK209
SW
REF
R1
REF
R2
Φ COMP
HOLD 1
PB
AMP
LIM
LOOP
FILTER
Q503
DTC144EK
SP/LP SW
HOLD
CI
PB
IN 1
PB
IN 2
DO
LEVEL
MUTE
TC
DO
TC
C501
0.01
C502
0.01
C503
680p
C534
47p
C535
0.0022
C536
0.01

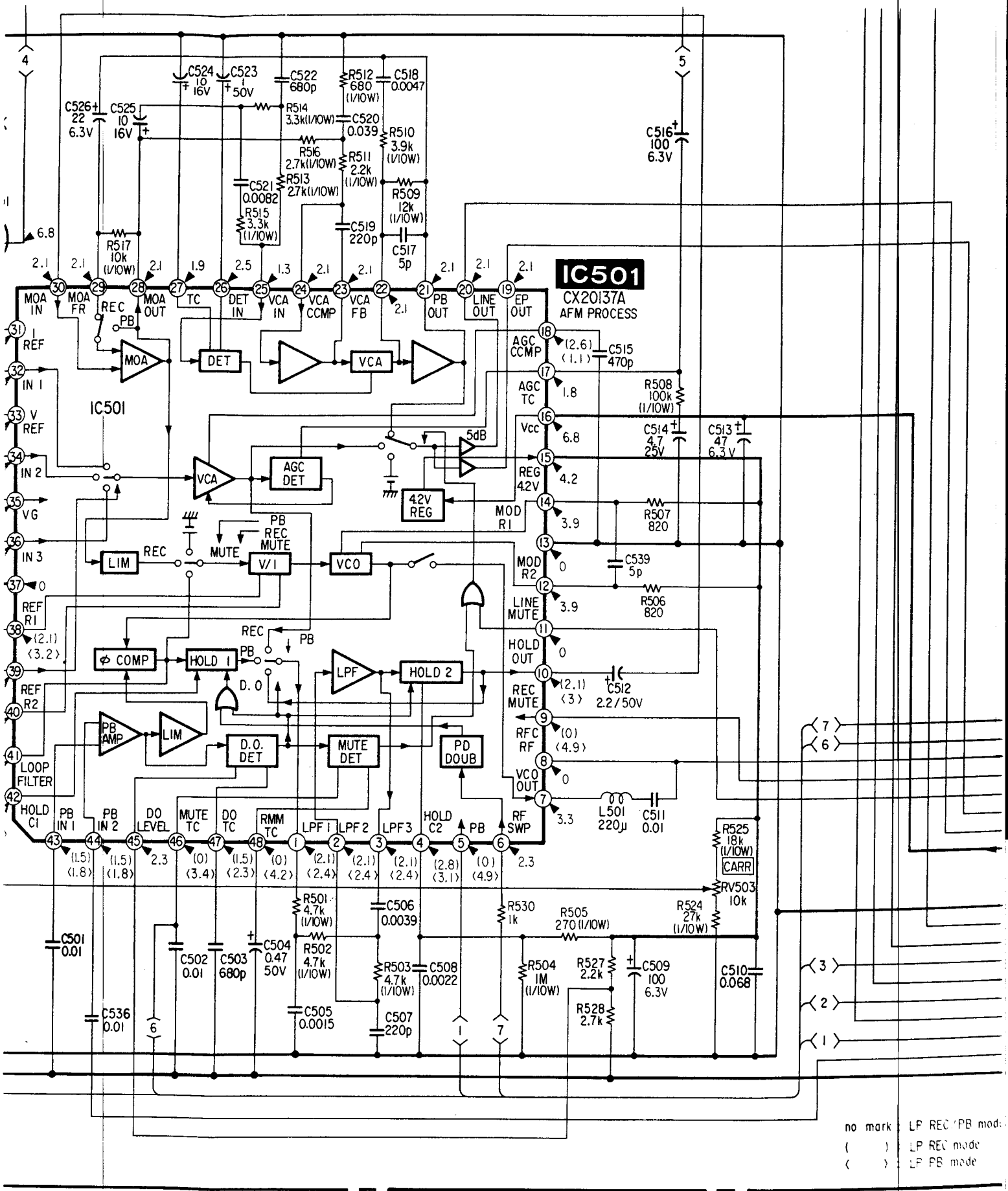
IC501
CX20137A
AFM PROCESS
MOA IN
MOA FR
REC
PB
MOA OUT
TC
DET IN
VCA IN
VCA CCMP
VCA FB
PB OUT
LINE OUT
EP OUT
I REF
IN 1
V REF
IN 2
VG
IN 3
REF R1
REF R2
LOOP FILTER
HOLD CI
PB IN 1
PB IN 2
DO LEVEL
MUTE TC
DO TC
RMM TC
LPF 1
LPF 2
LPF 3
HOLD C2
PB
RF SWP
AGC CCMP
AGC TC
Vcc
REG 4.2V
MOD R1
MOD R2
LINE MUTE
HOLD OUT
REC MUTE
RFC RF
VCO OUT
MOA
DET
VCA
AGC DET
4.2V REG
5dB
LIM
V/I
VCO
MUTE
PB REC MUTE
φ COMP
HOLD 1
HOLD 2
LPF
D. O
PB AMP
D.O. DET
MUTE DET
PD DOUB
C524 10 16V
C523 1 50V
C522 680p
R512 680 (1/10W)
C518 0.0047
C526 22 6.3V
C525 10 16V
R514 3.3k(1/10W)
C520 0.039
R510 3.9k (1/10W)
R516 2.7k(1/10W)
R511 2.2k (1/10W)
C521 0.0082
R513 2.7k(1/10W)
R509 12k (1/10W)
R515 3.3k (1/10W)
C519 220p
C517 5p
R517 10k (1/10W)
C516 100 6.3V
C515 470p
R508 100k (1/10W)
C514 4.7 25V
C513 47 6.3V
R507 820
C539 5p
R506 820
C512 2.2/50V
R525 18k (1/10W) CARR
RV503 10k
R524 27k (1/10W)
R505 270 (1/10W)
R530 1k
R504 1M (1/10W)
R527 2.2k
R528 2.7k
C509 100 6.3V
C510 0.068
L501 220μ
C511 0.01
R501 4.7k (1/10W)
R502 4.7k (1/10W)
R503 4.7k (1/10W)
C506 0.0039
C508 0.0022
C507 220p
C505 0.0015
C504 0.47 50V
C501 0.01
C502 0.01
C503 680p
C536 0.01
no mark : LP REC/PB mode
( ) : LP REC mode
( ) : LP PB mode

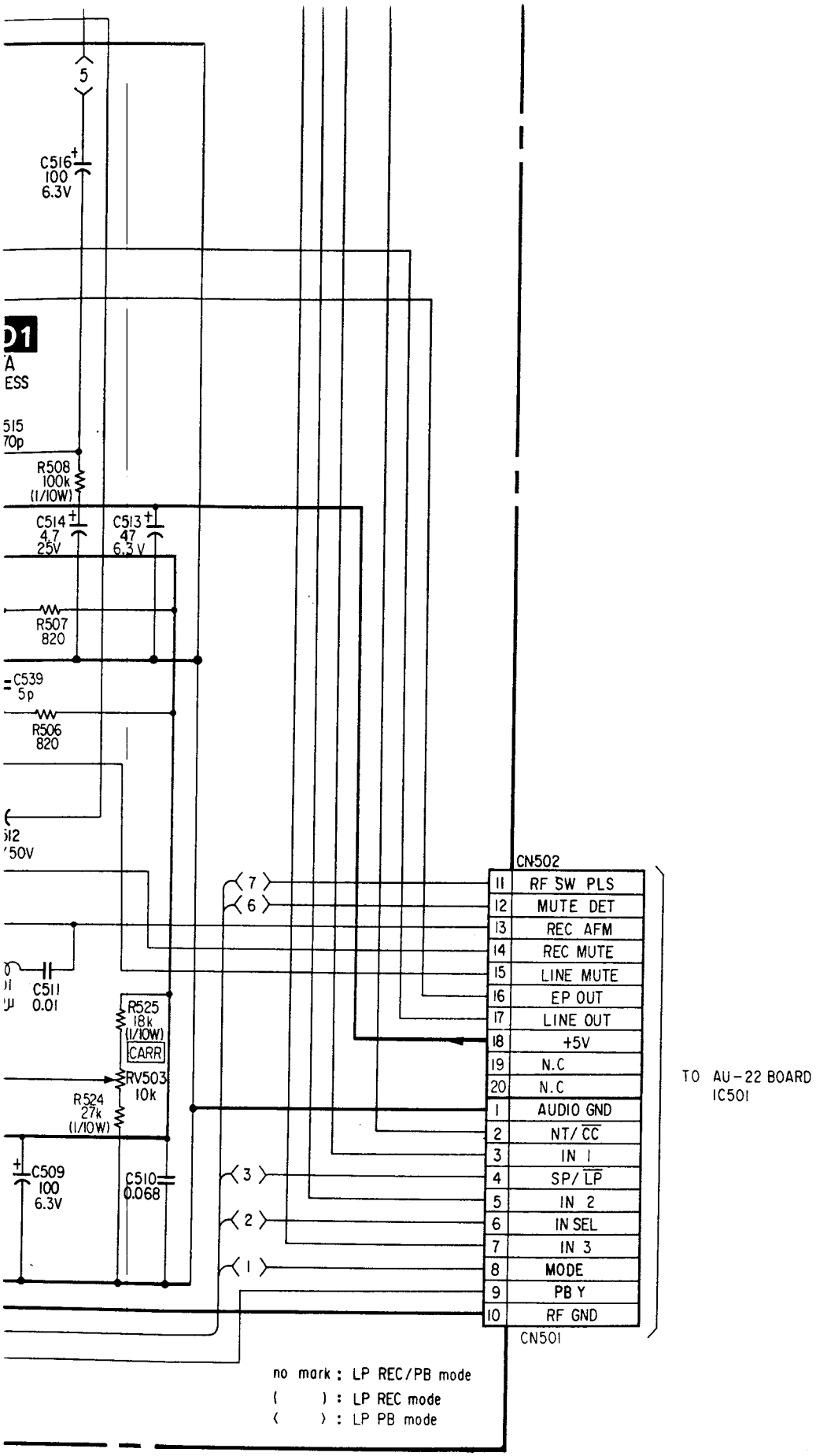


C D E F G H I J K L M

- adjustm
- : B + bus.
- Voltages are dc
- Readings are ta
- Readings are ta
- Voltage variati tolerances.

When indicating ence number, the board name.

- **Signal path**

- ——— : B + bus.
- Voltages are dc with respect to ground unless otherwise noted.
- Readings are taken with a colour-bar signal input.
- Readings are taken with a digital multimeter (DC10MΩ).
- Voltage variations may be noted due to normal production tolerances.

When indicating parts by reference number, please include the board name.

- **Signal path**

C

D

E

F

G

H

I

J

K

L

M

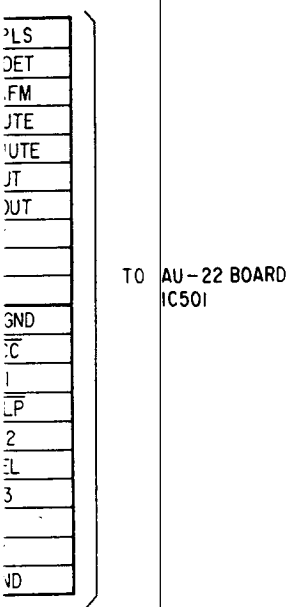


TO AU-22 BOARD
IC501

Note:

- ○— : indicates a lead wire mounted on the component side.
- ● : indicates a lead wire mounted on the printed side.
- ⊗ : Through hole.
- ▨ : soldering side.
- ▭ : component side.
- ▭ : B+ Pattern.

When indicating parts by reference number, please include the board name.

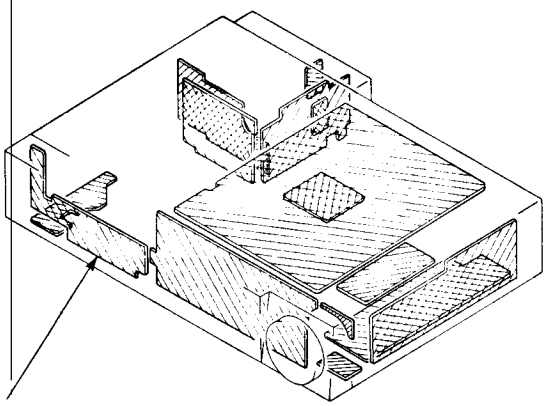

PW-30
(LEVEL METER/VOLUME/JACK/
REMOTE CONTROL RECEIVER)

| | |
|---|---|
| D101 | A-9 |
| D102 | D-7 |
| D103 | C-10 |
| D104 | D-9 |
| D105 | D-10 |
| IC101 | D-8 |
| IC201 | D-9 |
| IC202 | C-4 |
| Q211 | C-3 |
| Q212 | D-1 |
| Q213 | D-8 |
| RV201 | B-10 |
| RV301 | D-3 |

**PW-30** BOARD (SOLI

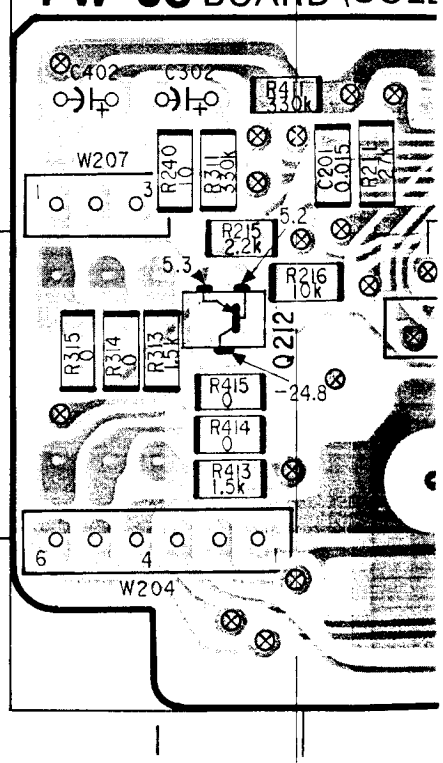

| | |
|---|---|
| D101 | A-9 |
| D102 | D-7 |
| D103 | C-10 |
| D104 | D-9 |
| D105 | D-10 |
| IC101 | D-8 |
| IC201 | D-9 |
| IC202 | C-4 |
| Q211 | C-3 |
| Q212 | D-1 |
| Q213 | D-8 |
| RV201 | B-10 |
| RV301 | D-3 |

ND201

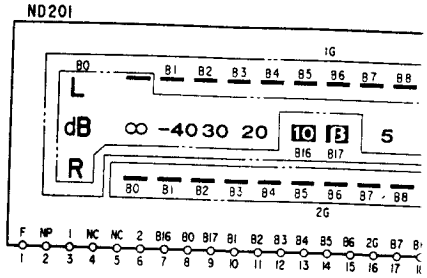


## PW-30 BOARD (SOLDER SIDE)

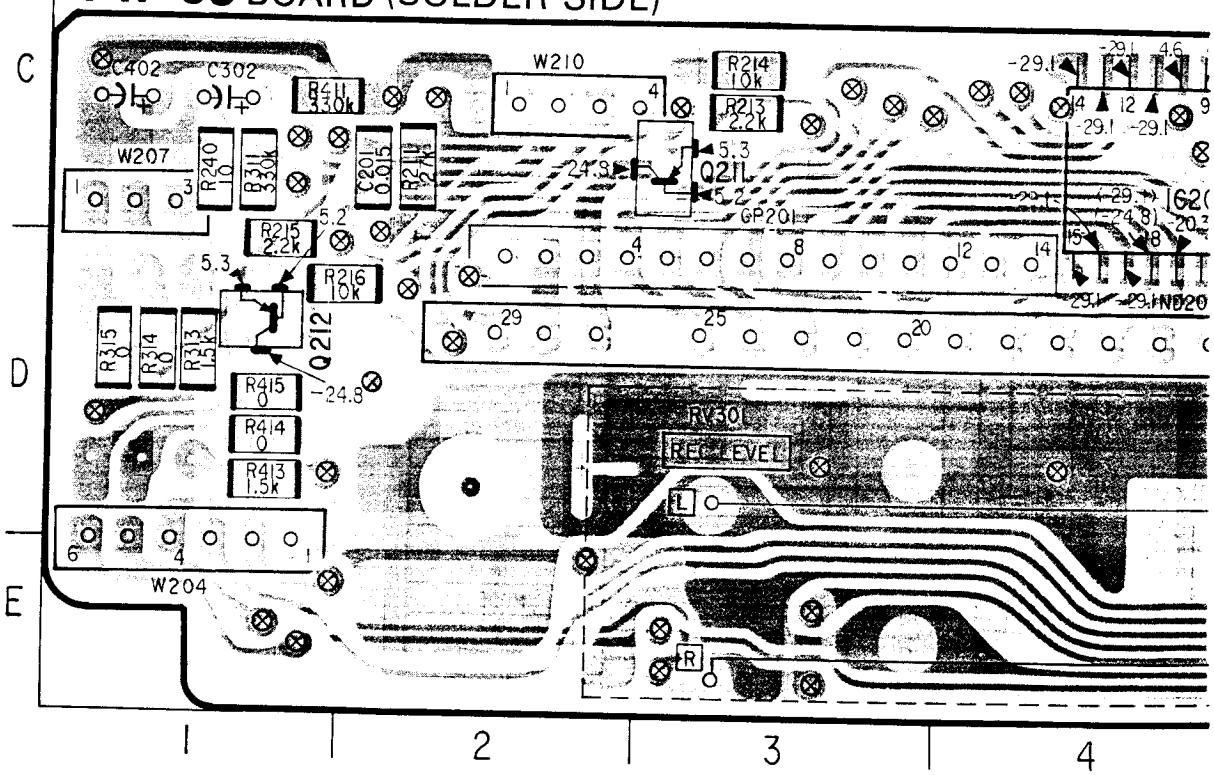

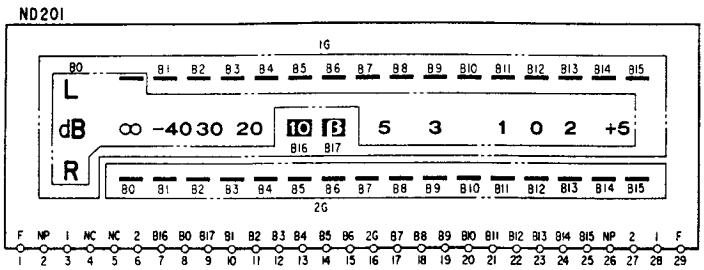
ND201
1G
B0 B1 B2 B3 B4 B5 B6 B7 B8 B9 B10 B11 B12 B13 B14 B15
L
dB ∞ -40 30 20 10 3 5 3 1 0 2 +5
B16 B17
R
2G
F NP 1 NC NC 2 B16 B0 B17 B1 B2 B3 B4 B5 B6 2G B7 B8 B9 B10 B11 B12 B13 B14 B15 NP 2 1 F
1 2 3 4 5 6 7 8 9 10 11 12 13 14 15 16 17 18 19 20 21 22 23 24 25 26 27 28 29

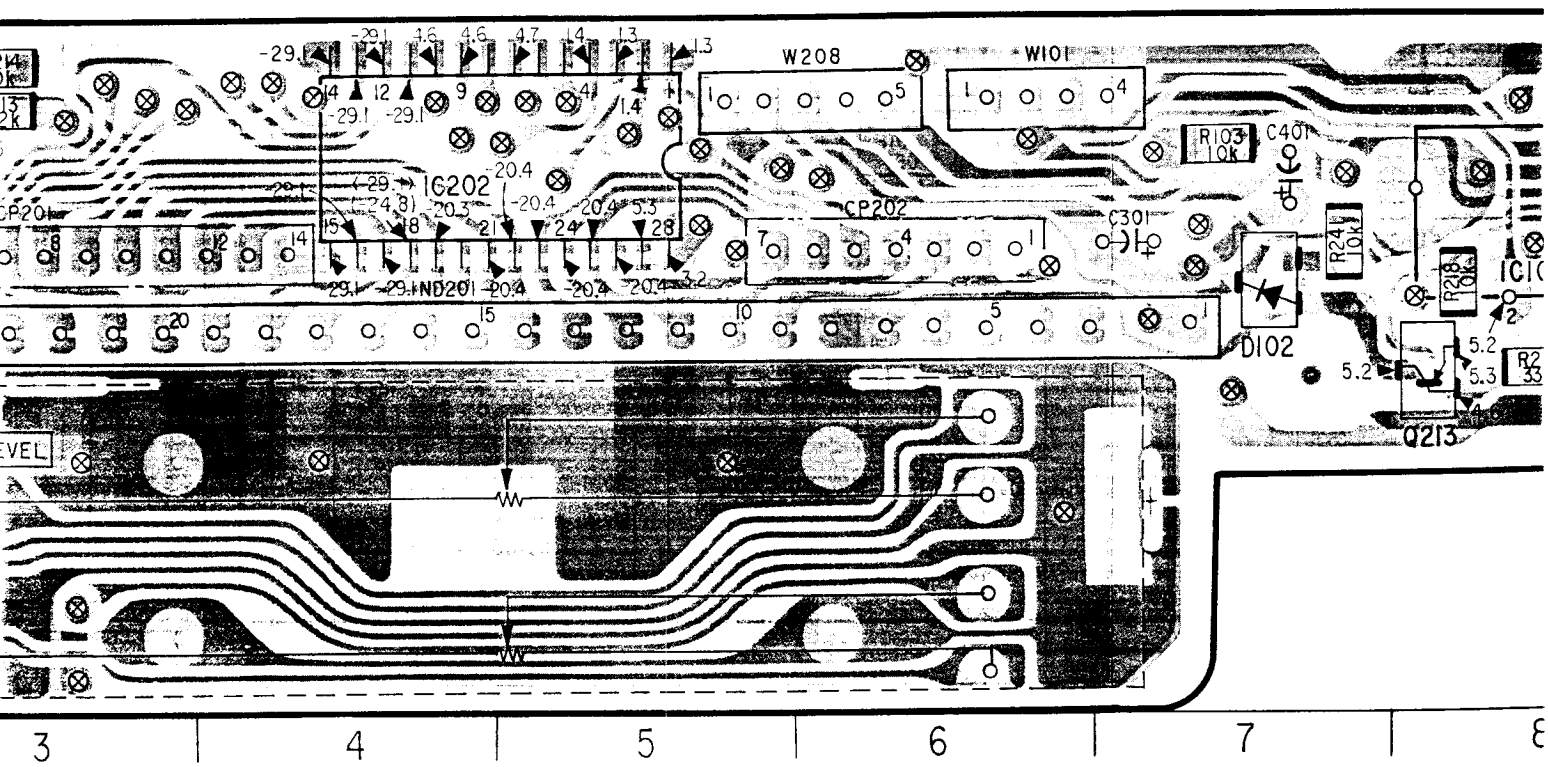
W208
W101
R103 10k
C401
IC202
CP202
C301
R241 10k
R218 10k
D102
Q213
ND201
3
4
5
6
7

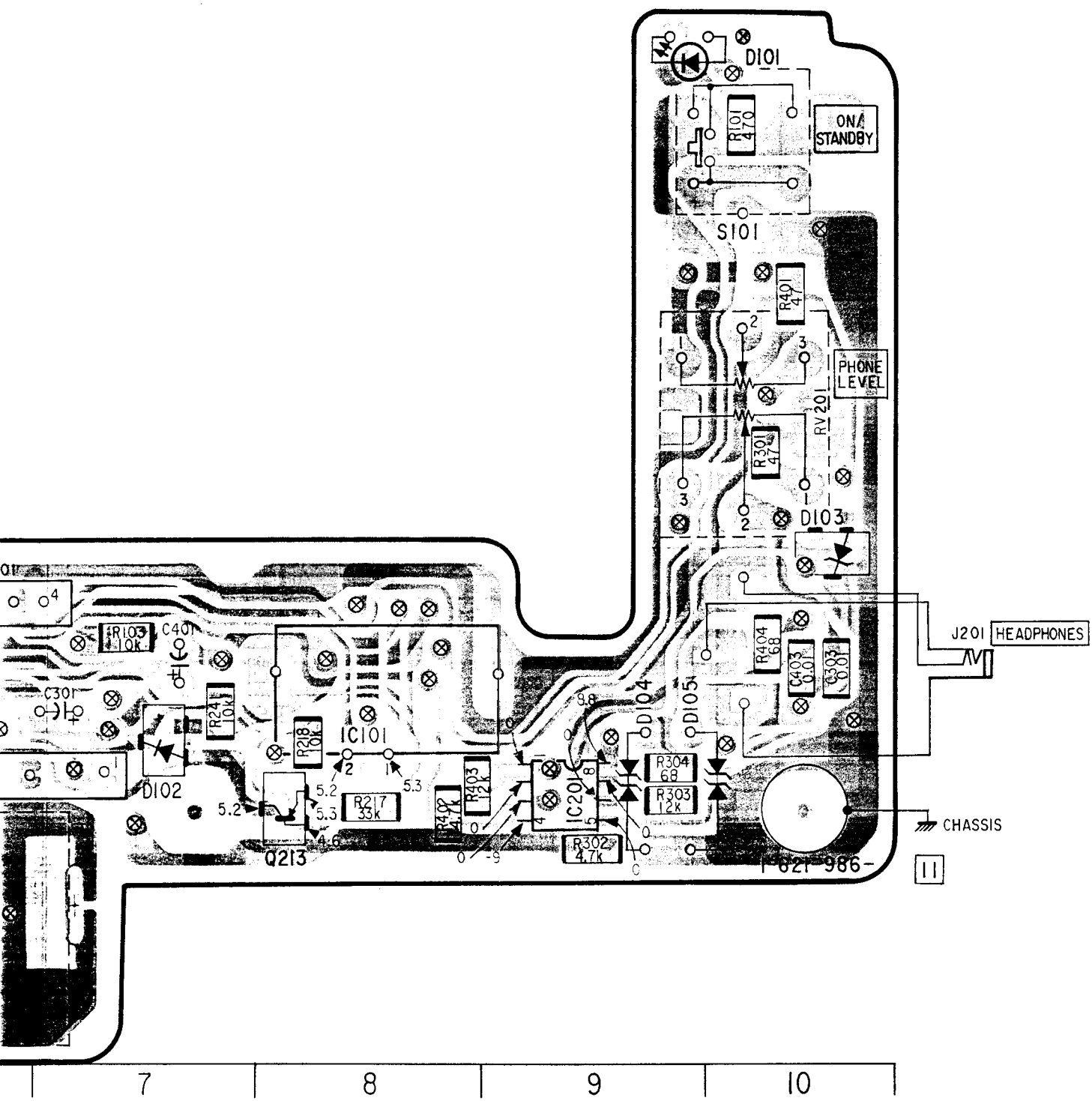
D101
R101 470
ON/STANDBY
S101
R401 47
PHONE LEVEL
RV201
R301 47
D103
J201 HEADPHONES
R404 68
C403 0.01
C303 0.01
D104
D105
R304 68
R303 12k
CHASSIS
R103 10k
C401
C301
R241 10k
R218 10k
IC101
D102
R217 33k
R403 12k
R402 4.7k
IC201
R302 4.7k
Q213
T-62T-986-
11
7
8
9
10

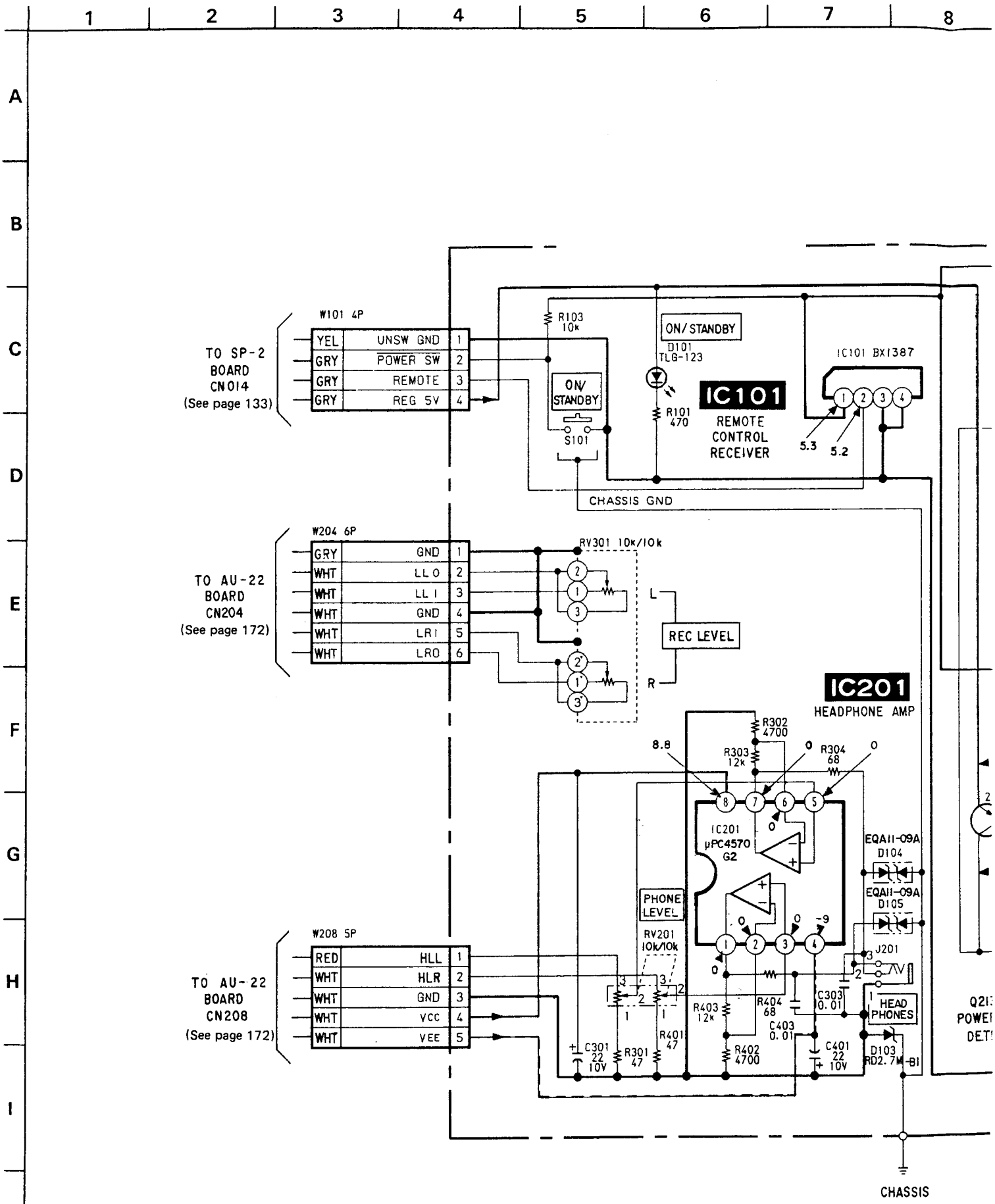
W101 4P
YEL UNSW GND 1
GRY POWER SW 2
GRY REMOTE 3
GRY REG 5V 4
TO SP-2 BOARD CN014 (See page 133)
R103 10k
ON/STANDBY
D101 TLG-123
IC101 BX1387
ON/ STANDBY
S101
R101 470
IC101
REMOTE CONTROL RECEIVER
5.3
5.2
CHASSIS GND
W204 6P
GRY GND 1
WHT LL O 2
WHT LL I 3
WHT GND 4
WHT LR I 5
WHT LR O 6
TO AU-22 BOARD CN204 (See page 172)
RV301 10k/10k
L
REC LEVEL
R
IC201
HEADPHONE AMP
R302 4700
R303 12k
R304 68
8.8
IC201 μPC4570 G2
EQA11-09A D104
EQA11-09A D105
PHONE LEVEL
RV201 10k/10k
J201
W208 5P
RED HLL 1
WHT HLR 2
WHT GND 3
WHT VCC 4
WHT VEE 5
TO AU-22 BOARD CN208 (See page 172)
R403 12k
R404 68
C303 0.01
C403 0.01
HEAD PHONES
C301 22 10V
R301 47
R401 47
R402 4700
C401 22 10V
D103 RD2.7M-B1
CHASSIS

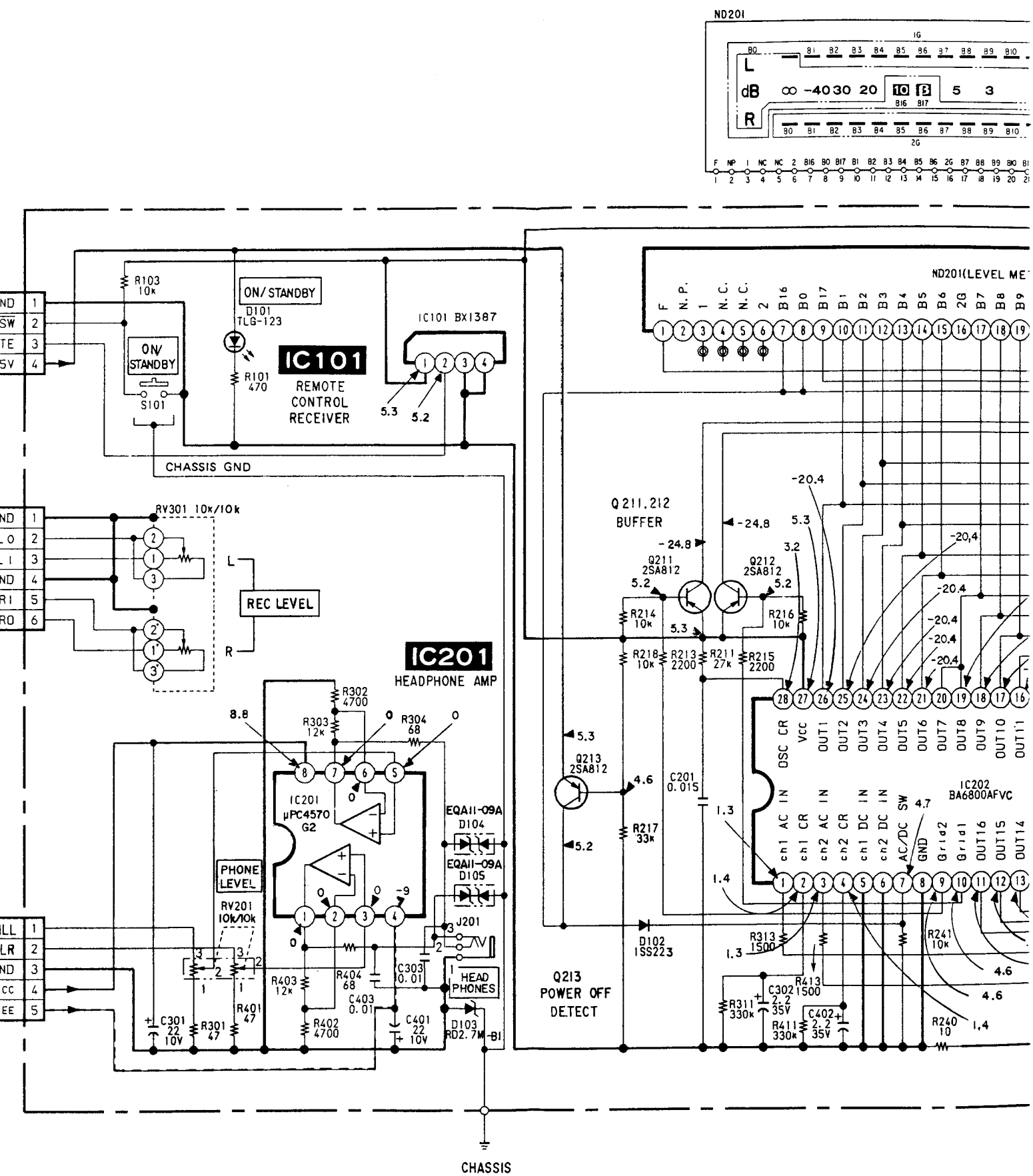
4
5
6
9
10
11
ND201
IC101
REMOTE CONTROL RECEIVER
ON/STANDBY
D101 TLG-123
R101 470
R103 10k
S101
IC101 BX1387
CHASSIS GND
RV301 10k/10k
REC LEVEL
IC201
HEADPHONE AMP
IC201 μPC4570 G2
PHONE LEVEL
RV201 10k/10k
EQA11-09A D104
EQA11-09A D105
J201
HEAD PHONES
D103 RD2.7M-B1
Q211,212 BUFFER
Q211 2SA812
Q212 2SA812
Q213 2SA812
Q213 POWER OFF DETECT
D102 1SS223
IC202 BA6800AFVC
ND201(LEVEL ME
CHASSIS

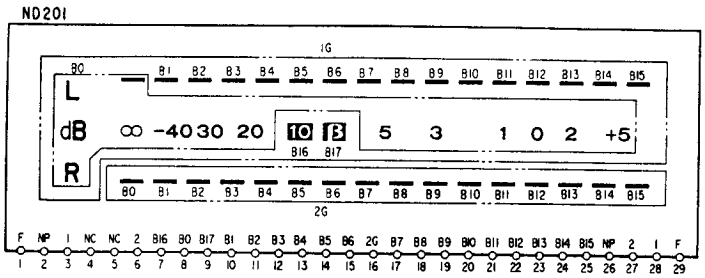


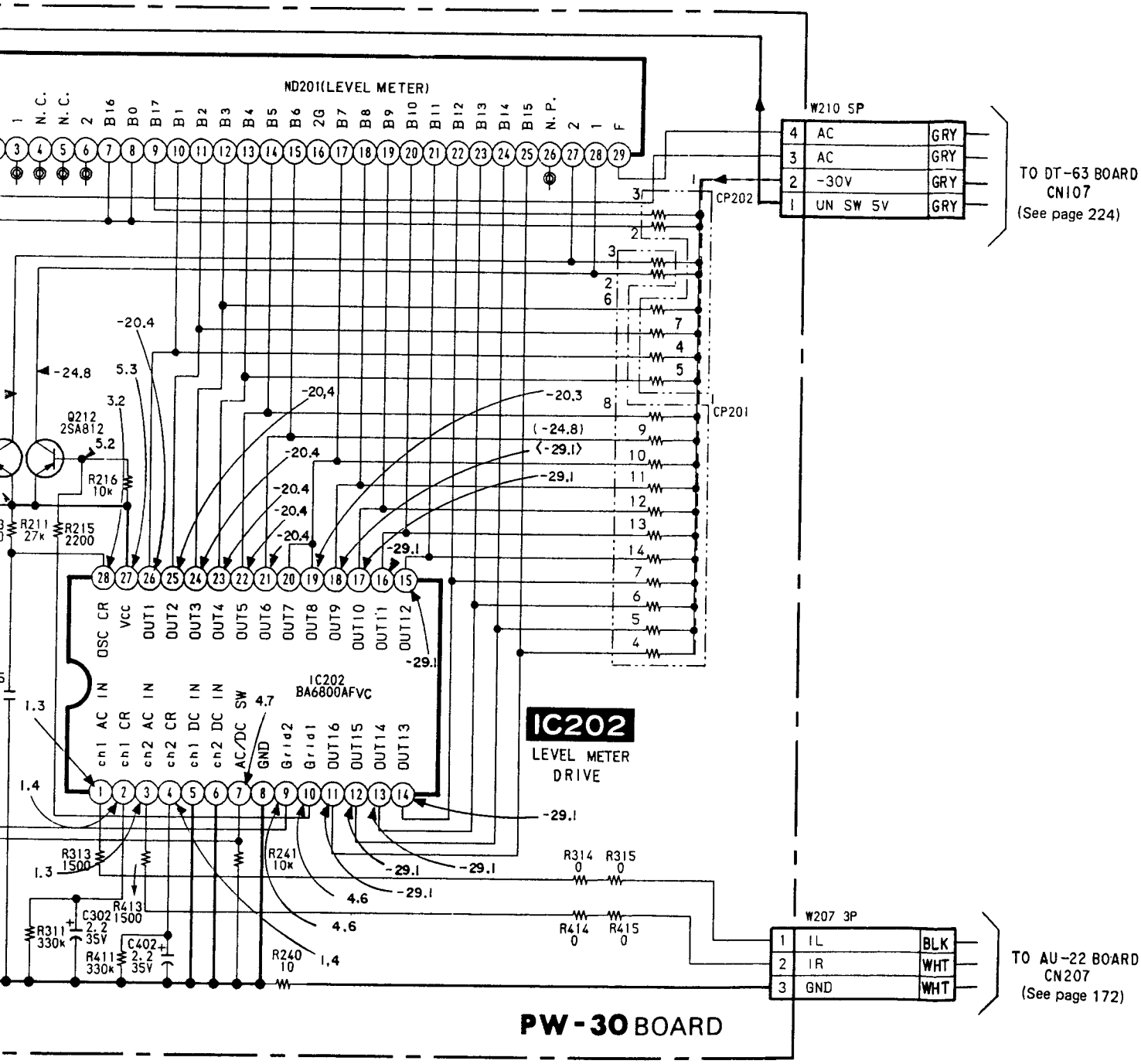


no mark : LP REC/PB mode

( ) : LP REC mode

〈 〉 : LP PB mode

A B C D E F G H I J

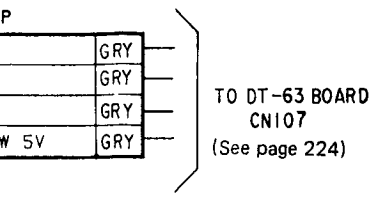


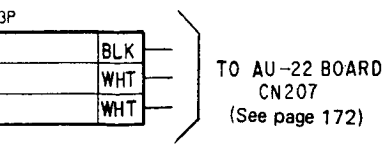


**Note:**

- Caution when replacing chip parts.
  New parts must be attached after removal of chip.
  Be careful not to heat the minus side of tantalum capacitor, because it is damaged by the heat.
- All resistors are in ohms, 1/10W unless otherwise noted.
  kΩ: 1000Ω, MΩ: 1000kΩ.
- All capacitors are in μF unless otherwise noted. pF : μμF.
  50V or less are not indicated except for electrolytice. and tantalums.
- All variable and adjustable resistors have characteristic curve B, unless otherwise noted.
- [ ] : panel designation.
- [ ] : adjustment for repair.
- ——— : B + bus.
- – – – : B – bus.
- Voltages are dc with respect to ground unless otherwise noted
- Readings are taken with a colour-bar signal input.
- Readings are taken with a digital multimeter (DC10MΩ).
- Voltage variations may be noted due to normal production tolerances.

When indicating parts by reference number, please include the board name.

- **Signal path**

**Note:**

- ○— : indicates a lead wire mounted on the component side.
- ●— : indicates a lead wire mounted on the printed side.
- : soldering side.
- : B+ Pattern.

- Digital transistor (TU-83:Q005,Q006,Q007,TS-50:Q018) transistor with resistors.
  Refer to the TU-83,TS-50 boards schematic diagram for digital transistor.

When indicating parts by reference number, please include the board name.

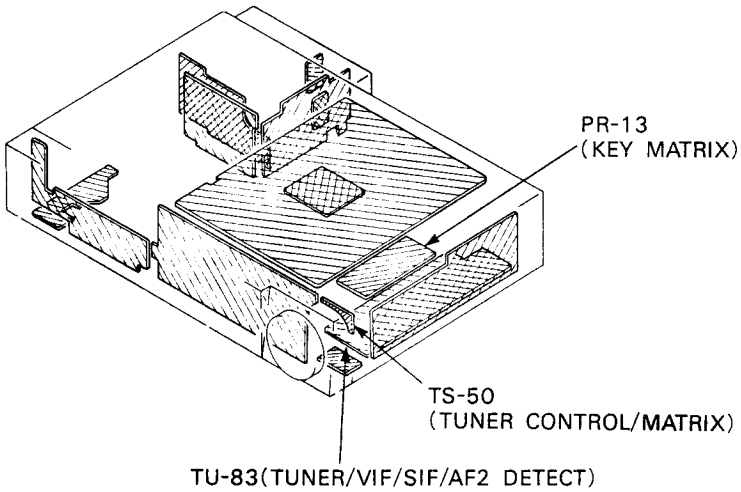


| | |
|---|---|
| D101 | B-6 |
| IC101 | B-4 |
| IC102 | B-2 |
| IC103 | A-11 |
| IC104 | C-5 |
| Q101 | B-5 |
| Q102 | B-10 |
| Q103 | B-11 |
| Q104 | B-11 |
| Q105 | B-7 |
| Q106 | C-4 |
| Q107 | A-2 |
| Q108 | B-5 |
| RV101 | C-9 |

| | |
|---|---|
| D001 | C-10 |
| D002 | B-10 |
| IC001 | C-7 |
| IC002 | B-8 |
| IC003 | C-11 |
| Q001 | B-1 |
| Q002 | B-4 |
| Q003 | C-10 |
| Q004 | B-8 |
| Q005 | C-10 |
| Q006 | B-10 |
| Q007 | B-10 |
| RV001 | A-11 |

cates a lead wire mounted on the component side.
cates a lead wire mounted on the printed side.
ering side.
attern.

nsistor (TU-83:Q005,Q006,Q007,TS-50:Q018) tran-
resistors.
he TU-83,TS-50 boards schematic diagram for digital

ating parts by refer-
ber, please include
ame.

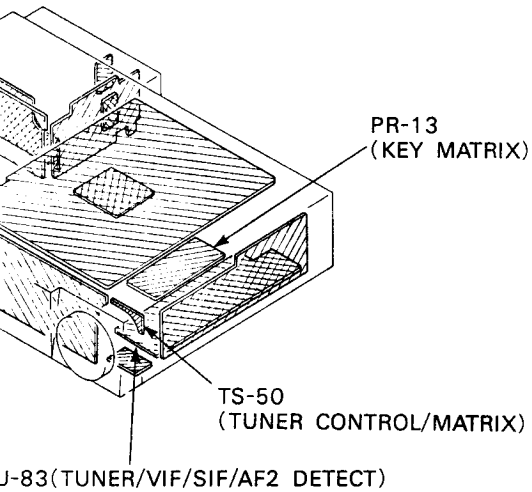


D101 B-6

IC101 B-4
IC102 B-2
IC103 A-11
IC104 C-5

Q101 B-5
Q102 B-10
Q103 B-11
Q104 B-11
Q105 B-7
Q106 C-4
Q107 A-2
Q108 B-5

RV101 C-9

**TS-50** BOARD

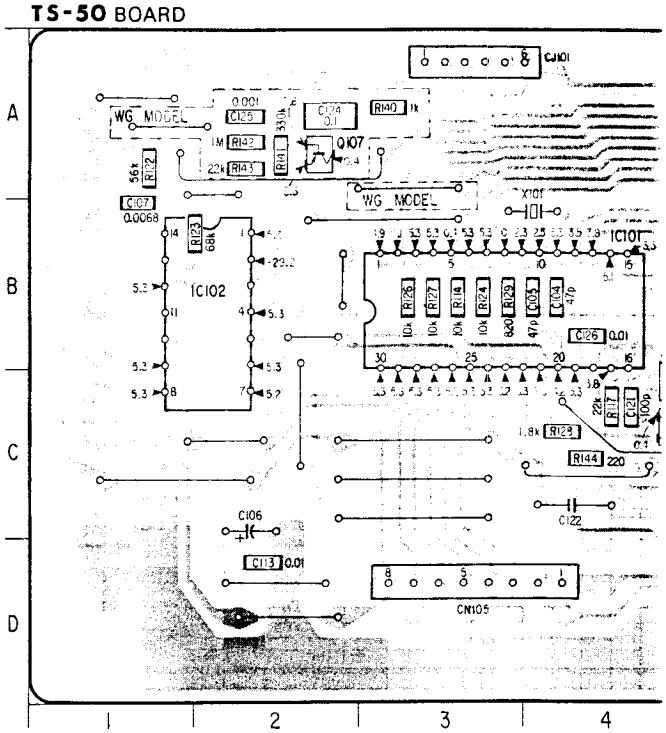


ntact
RVICES
inor
-352554
co.uk

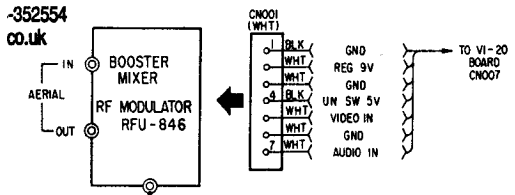


D001 C-10
D002 B-10

IC001 C-7
IC002 B-8
IC003 C-11

Q001 B-1
Q002 B-4
Q003 C-10
Q004 B-8
Q005 C-10
Q006 B-10
Q007 B-10

RV001 A-11

**TU-83** BOARD

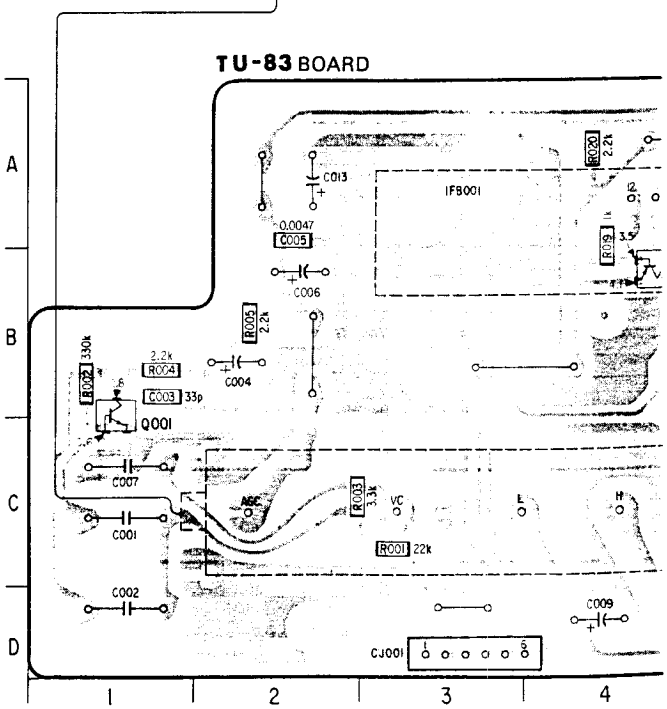

D

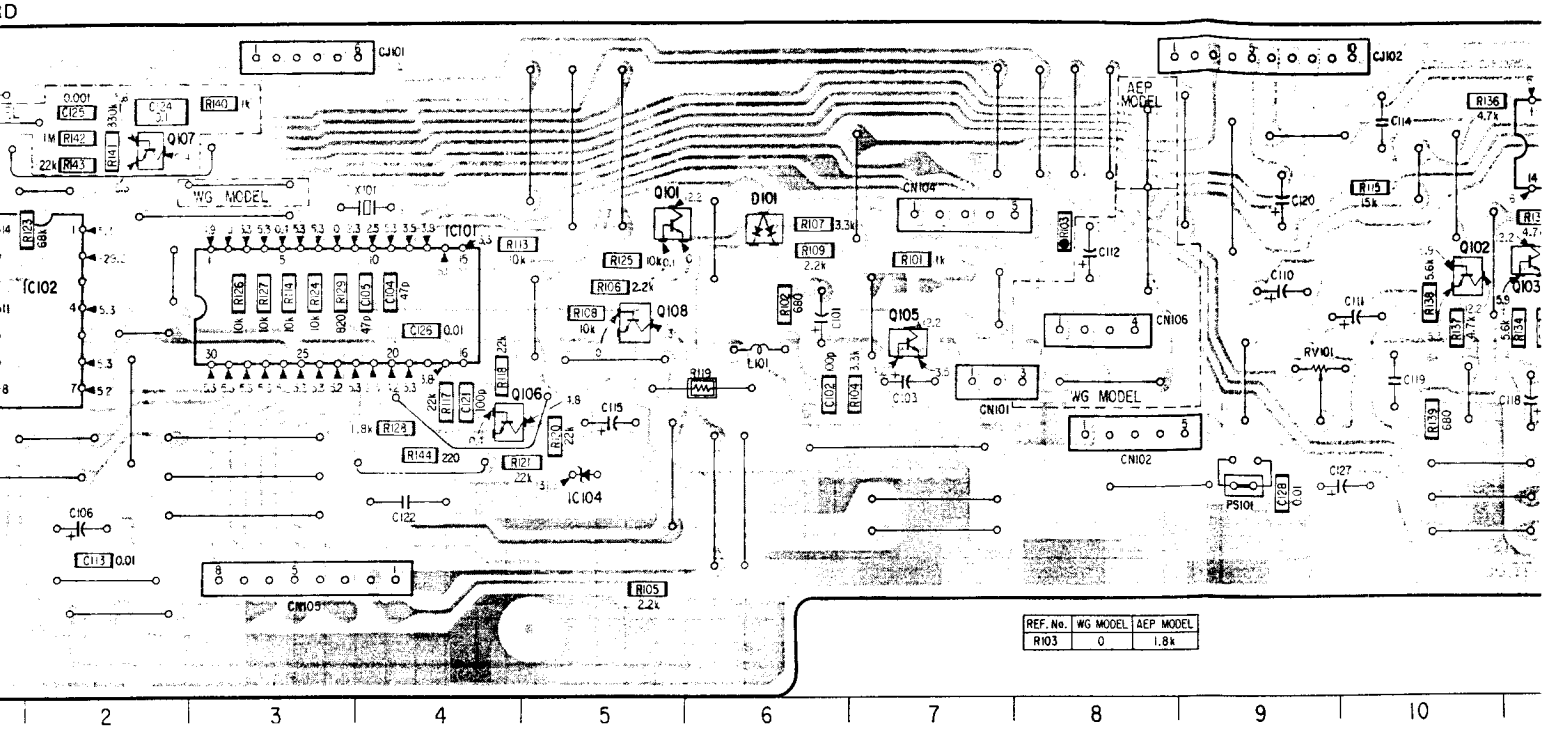
CJ101
CJ102
WG MODEL
AEP MODEL
IC101
IC102
IC104
Q101
Q102
Q103
Q105
Q106
Q107
Q108
D101
CN101
CN102
CN103
CN104
CN105
CN106
PS101
RV101
L101
X101
REF. No. | WG MODEL | AEP MODEL
R103 | 0 | 1.8k
2
3
4
5
6
7
8
9
10

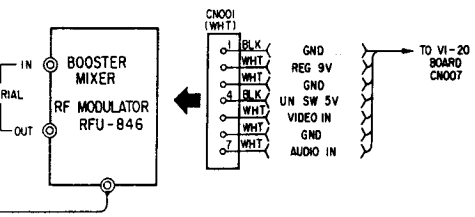
BOOSTER MIXER
RF MODULATOR RFU-846
IN
OUT
CN001 (WHT)
BLK
WHT
GND
REG 9V
GND
UN SW 5V
VIDEO IN
GND
AUDIO IN
TO VI-20 BOARD CN007

**TU-83** BOARD

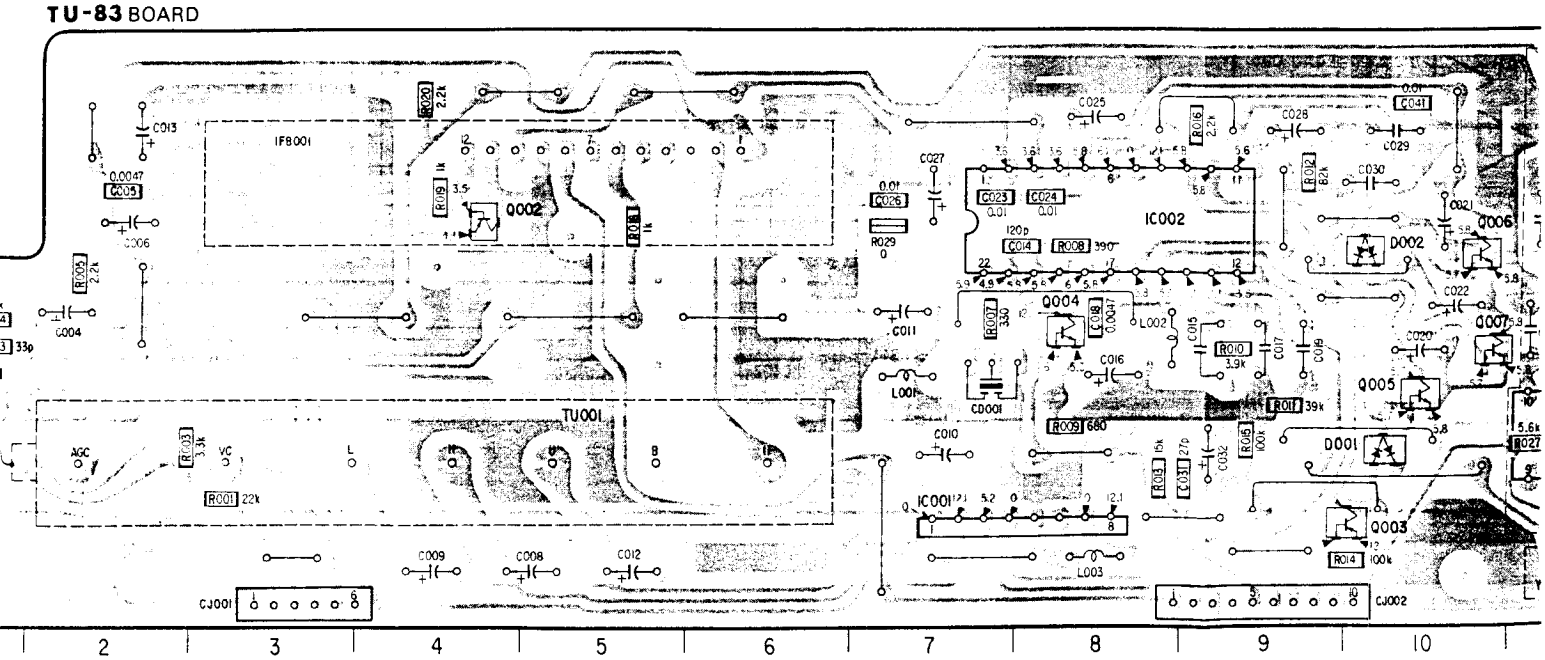
IF8001
TU001
IC001
IC002
Q001
Q002
Q003
Q004
Q005
Q006
Q007
D001
D002
L001
L002
L003
CD001
CJ001
CJ002
AGC
VC
2
3
4
5
6
7
8
9
10

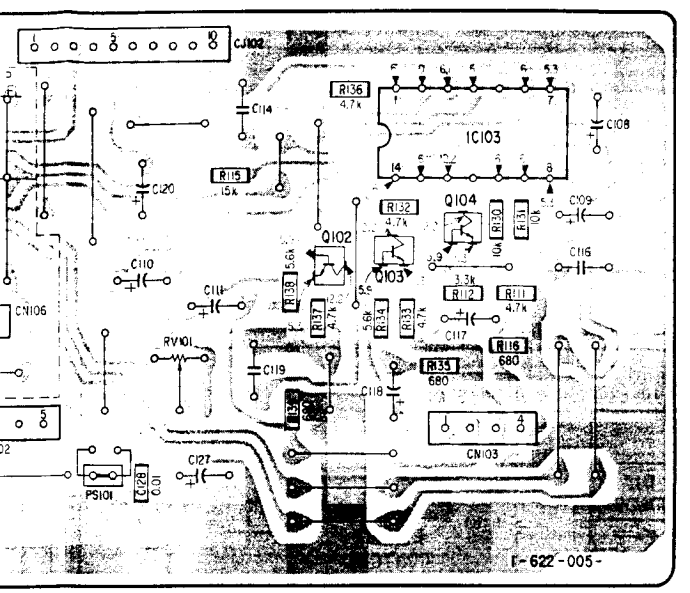


EP MODEL
1.8k

9 10 11 12

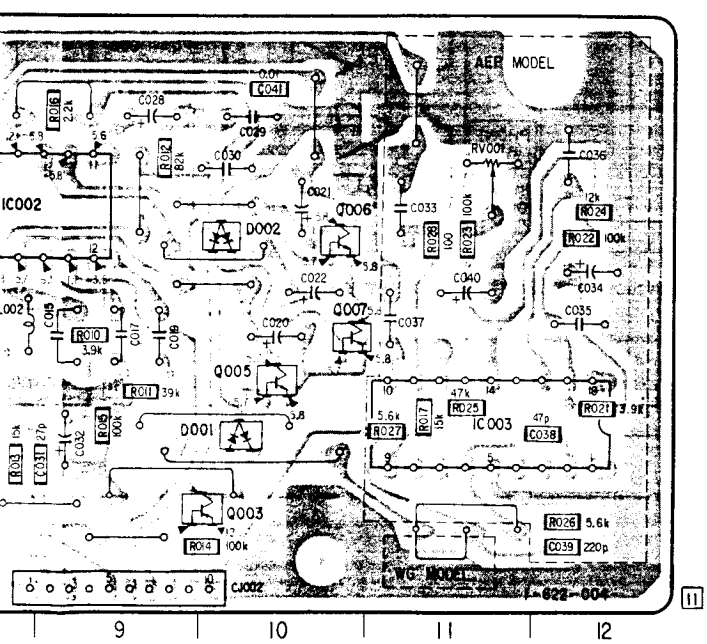


9 10 11 12

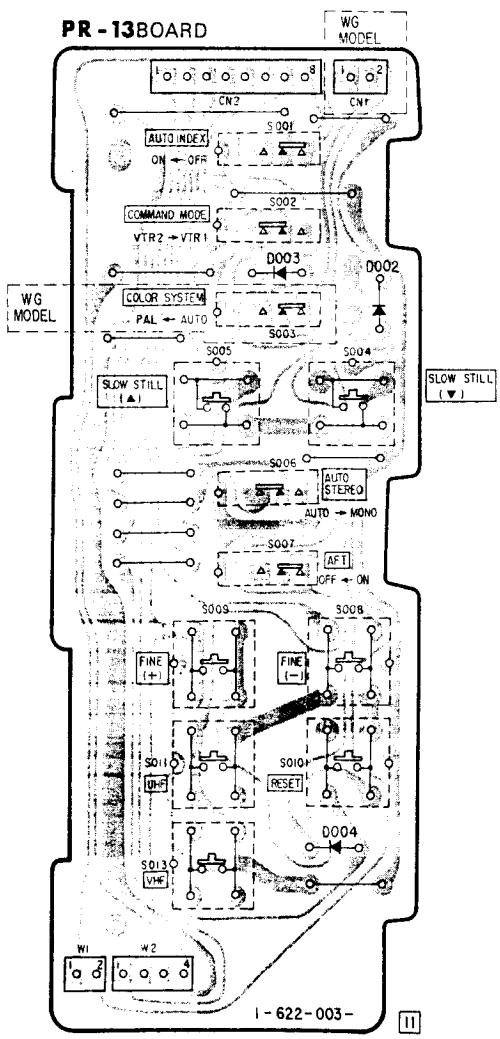




R TUNER

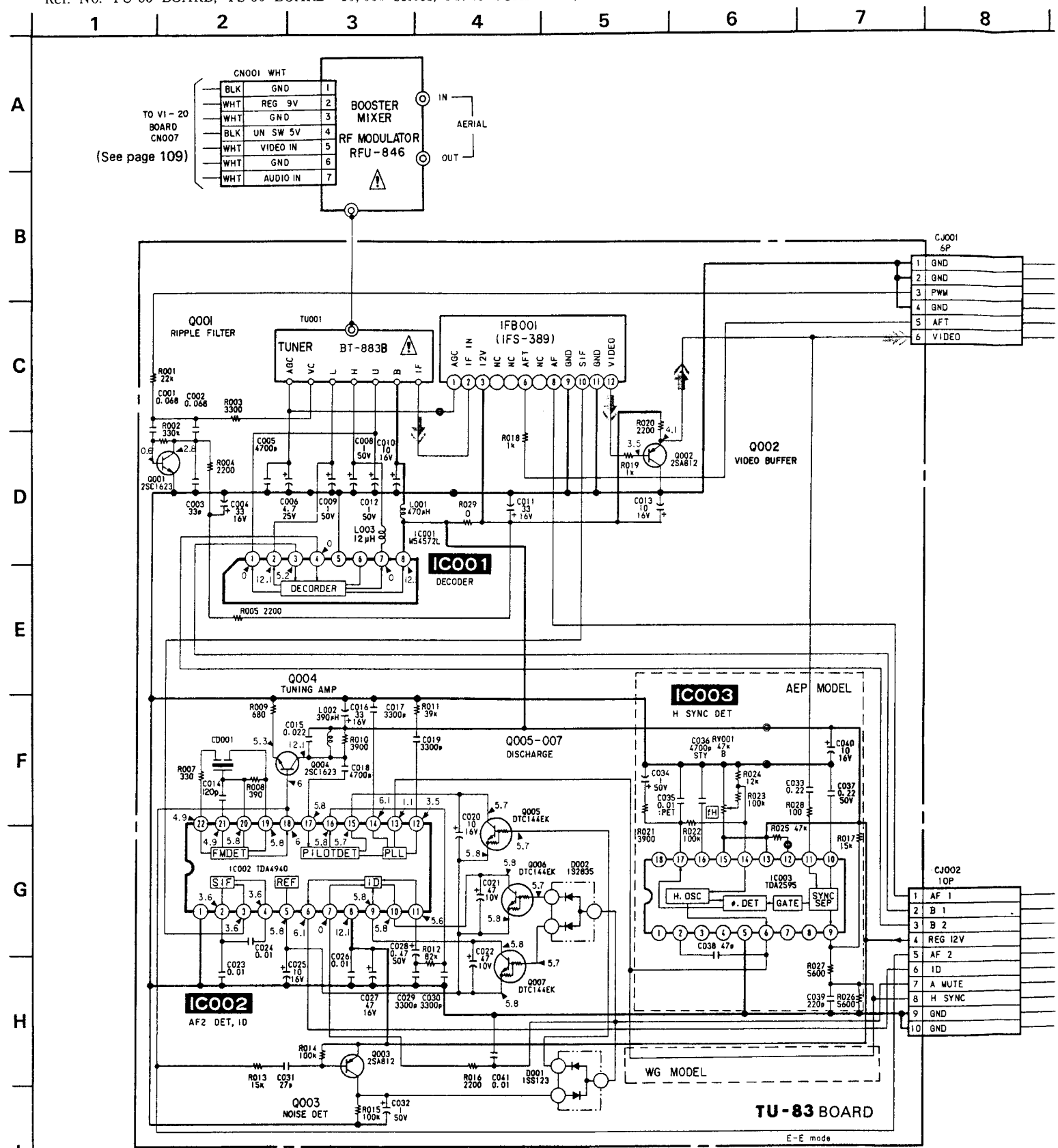
CN001 WHT
BLK GND 1
WHT REG 9V 2
WHT GND 3
BLK UN SW 5V 4
WHT VIDEO IN 5
WHT GND 6
WHT AUDIO IN 7
TO VI-20 BOARD CN007
(See page 109)
BOOSTER MIXER
RF MODULATOR RFU-846
IN
OUT
AERIAL
CJ001 6P
1 GND
2 GND
3 PWM
4 GND
5 AFT
6 VIDEO
Q001 RIPPLE FILTER
TU001
TUNER BT-883B
IFB001 (IFS-389)
AGC IF IN 12V NC NC AFT NC AF GND S/F GND VIDEO
Q002 VIDEO BUFFER
Q001 2SC1623
Q002 2SA812
IC001 DECODER
DECORDER
IC001 MS4572L
Q004 TUNING AMP
Q004 2SC1623
Q005-007 DISCHARGE
Q005 DTC144EK
Q006 DTC144EK
Q007 DTC144EK
D002 1S2835
D001 1SS123
IC002 TDA4940
FMDET PILOTDET PLL
SIF REF ID
IC002 AF2 DET, ID
IC003 H SYNC DET
AEP MODEL
IC003 TDA2595
H. OSC ø. DET GATE SYNC SEP
WG MODEL
Q003 NOISE DET
Q003 2SA812
CJ002 10P
1 AF 1
2 B 1
3 B 2
4 REG 12V
5 AF 2
6 ID
7 A MUTE
8 H SYNC
9 GND
10 GND
TU-83 BOARD
E-E mode

6 | 7 | 8 | 9 | 10 | 11 | 12 | 13

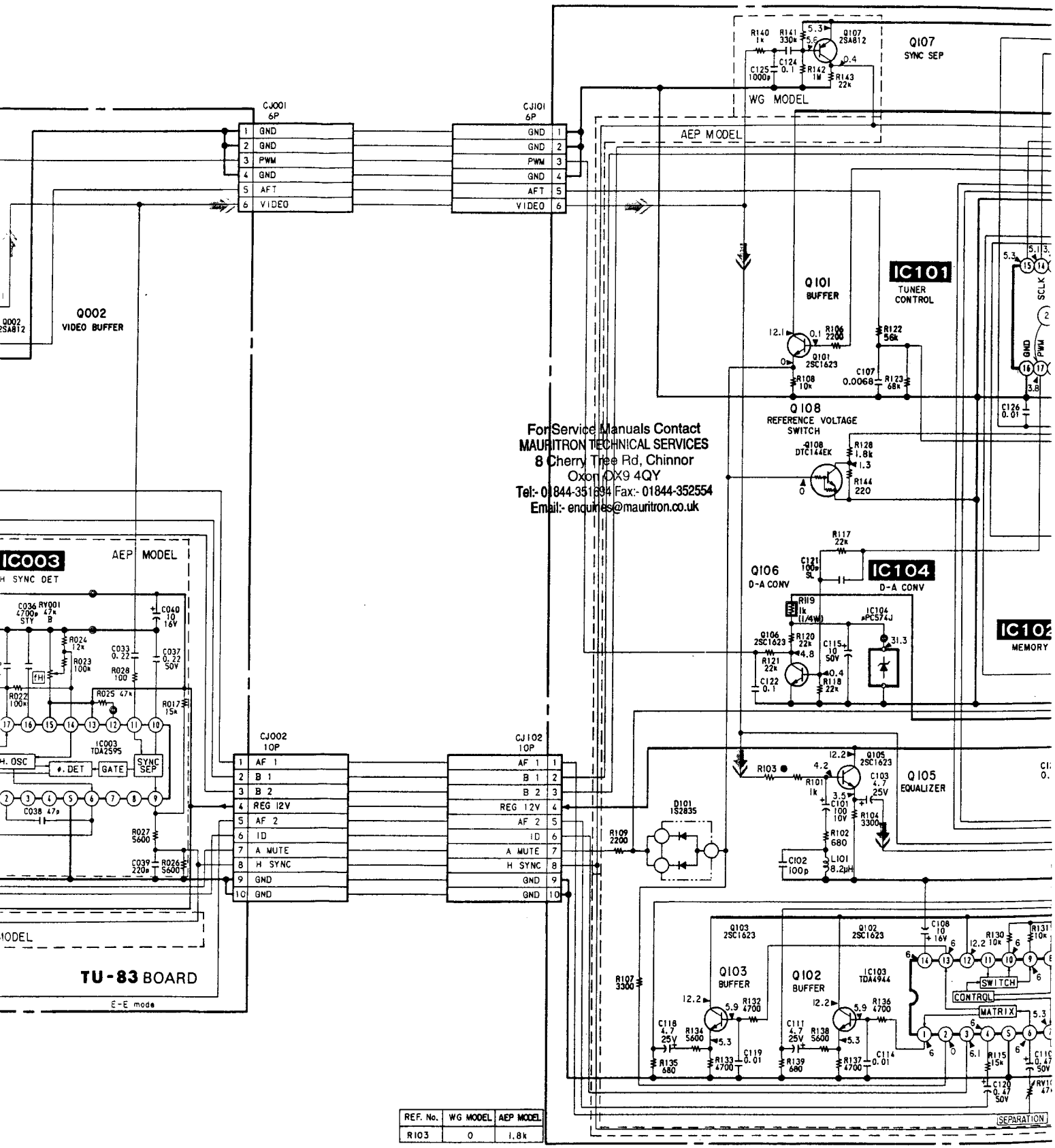


For Service Manuals Contact
MAURITRON TECHNICAL SERVICES
8 Cherry Tree Rd, Chinnor
Oxon OX9 4QY
Tel:- 01844-351694 Fax:- 01844-352554
Email:- enquiries@mauritron.co.uk

| REF. No. | WG MODEL | AEP MODEL |
|---|---|---|
| R103 | 0 | 1.8k |



**TUNER TUNER**

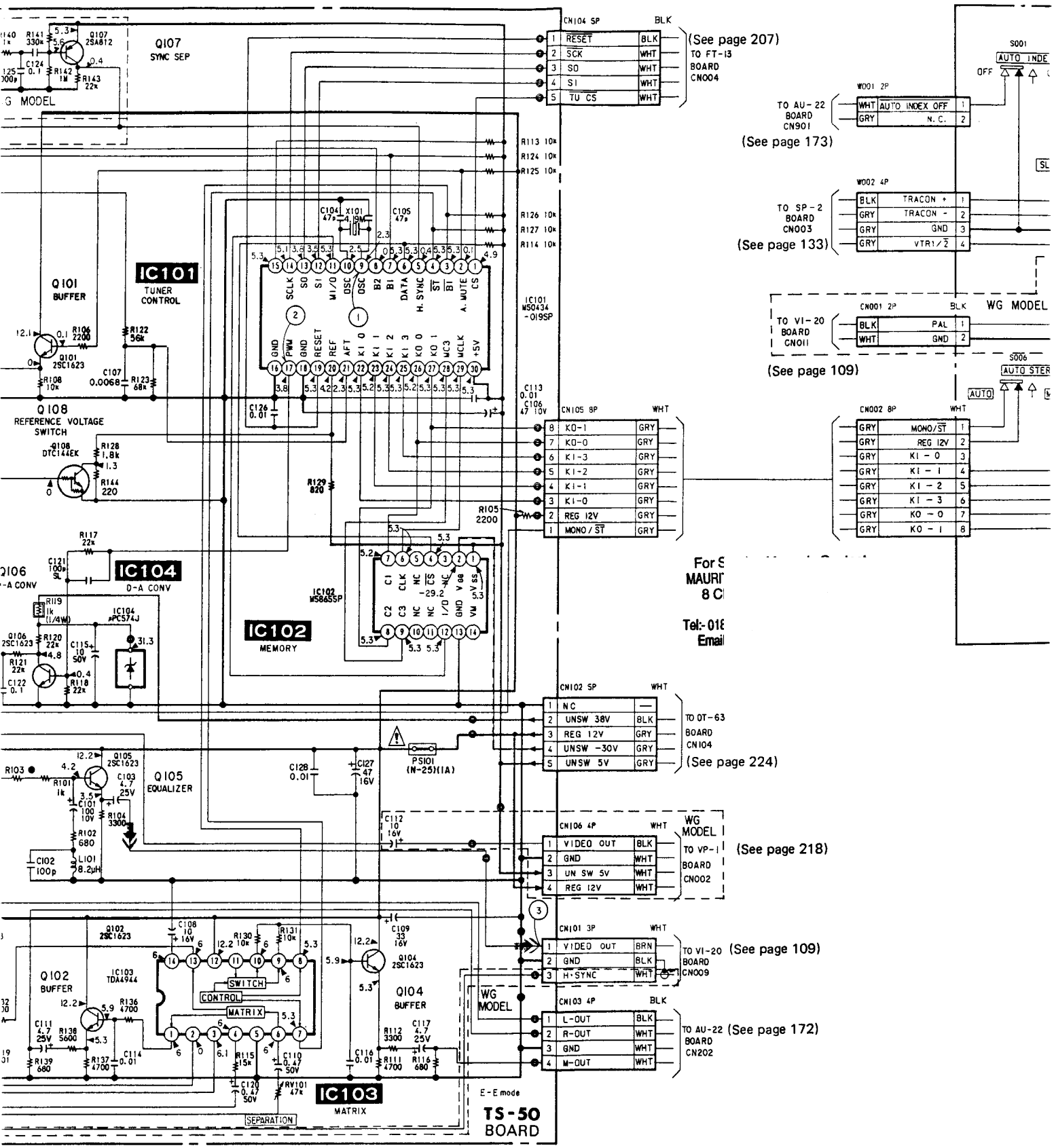
IC101
TUNER CONTROL
IC102
MEMORY
IC103
MATRIX
IC104
D-A CONV
Q101 BUFFER
Q102 BUFFER
Q104 BUFFER
Q105 EQUALIZER
Q107 SYNC SEP
Q108 REFERENCE VOLTAGE SWITCH
CN104 5P
CN105 8P
CN102 5P
CN106 4P
CN101 3P
CN103 4P
CN001 2P
CN002 8P
W001 2P
W002 4P
(See page 207)
TO FT-13 BOARD CN004
TO AU-22 BOARD CN901
(See page 173)
TO SP-2 BOARD CN003
(See page 133)
TO VI-20 BOARD CN011
(See page 109)
WG MODEL
TO OT-63 BOARD CN104
(See page 224)
TO VP-1 BOARD CN002
(See page 218)
TO VI-20 BOARD CN009
(See page 109)
TO AU-22 BOARD CN202
(See page 172)
E-E mode
TS-50 BOARD

page 207)
T-13
D
4

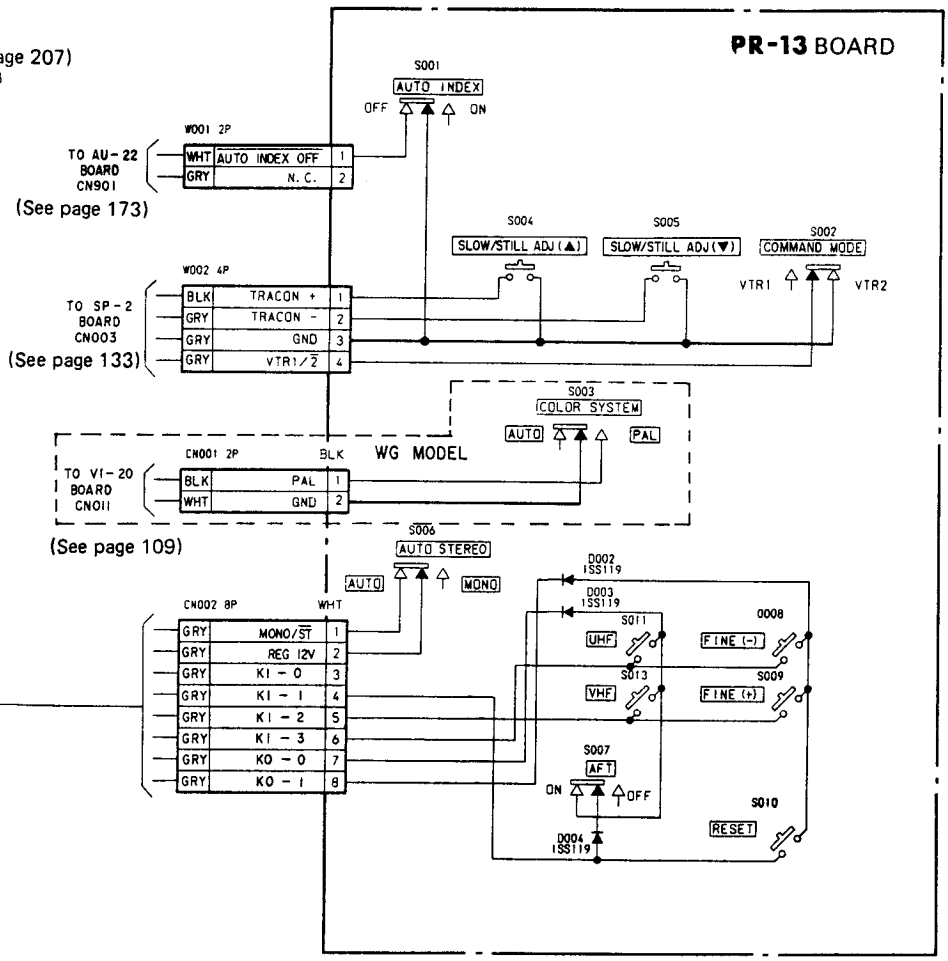


(See page 173)
(See page 133)
(See page 109)

3

page 224)

(See page 218)
(See page 109)
(See page 172)

**Note:**

- Caution when replacing c
  New parts must be attacl
  Be careful not to heat
  because it is damaged by
- All resistors are in ohms
  kΩ: 1000Ω, MΩ: 1000k
- All capacitors are in μF
  50V or less are not indic
  tantalums.
- All variable and adjustat
  unless otherwise noted.
- Marked ● parts have th
  the AEP model.
- ▭ : panel designation.
- ▭ : adjustment for rep
- ——— : B + bus.
- - - - : B − bus.
- Voltages are dc with res
- Readings are taken with a
- Readings are taken with
- Voltage variations may
  tolerances.

When indicating parts by
ence number, please
the board name.

**Note: The components**
**⚠ are critical f**
**part number spe**

- **Signal path**

➠ : REC Y/CHROM

**TS-50 BOARD**

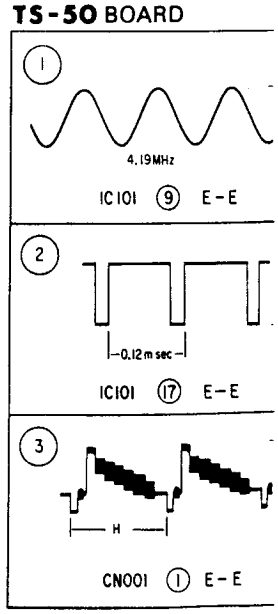


A B C D E F G H I J

Note:

- Caution when replacing chip parts.
  New parts must be attached after removal of chip.
  Be careful not to heat the minus side of tantalum capacitor, because it is damaged by the heat.
- All resistors are in ohms, 1/10W unless otherwise noted.
  kΩ: 1000Ω, MΩ: 1000kΩ.
- All capacitors are in μF unless otherwise noted. pF : μμF.
  50V or less are not indicated except for electrolytice. and tantalums.
- All variable and adjustable resistors have characteristic curve B, unless otherwise noted.
- Marked ● parts have the difference between the WG model and the AEP model.
- ▭ : panel designation.
- ▭ : adjustment for repair.
- ——— : B + bus.
- – – – : B – bus.
- Voltages are dc with respect to ground unless otherwise noted.
- Readings are taken with a colour-bar signal input.
- Readings are taken with a digital multimeter (DC10MΩ).
- Voltage variations may be noted due to normal production tolerances.

When indicating parts by reference number, please include the board name.

**Note: The components identified by shading and mark ⚠ are critical for safety. Replace only with part number specified.**

- **Signal path**

  ➡ : REC Y/CHROMA Signal

**TS-50** BOARD

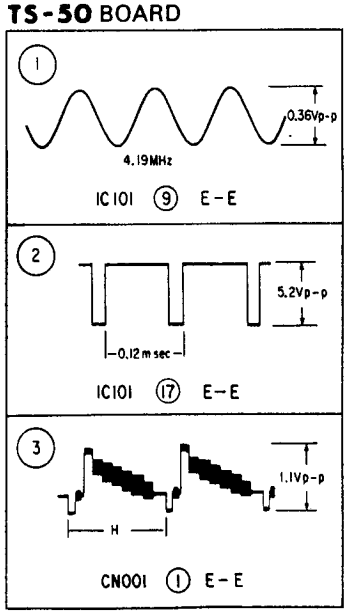

**Note:**

- ○— : indicates a lead wire mounted on the component side.
- ●— : indicates a lead wire mounted on the printed side.
- ⊗ : Through hole.
- : soldering side.
- : component side.
- : B+ Pattern.

When indicating parts by reference number, please include the board name.

## FT-13(TIMER/MODE CONTROL

—Ref. No. FT-13 BOARD : 11,000 ser

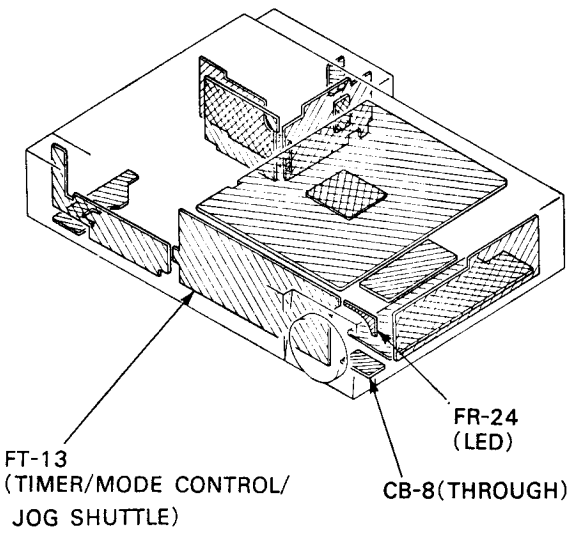


### FT-13 BOARD

| | |
|---|---|
| CV001 | A-2 |
| D001 | D-10 |
| D002 | D-10 |
| D003 | D-11 |
| D004 | D-11 |
| D005 | D-11 |
| D006 | C-11 |
| D007 | C-12 |
| D008 | A-15 |
| D009 | E-12 |
| D010 | B-10 |
| D011 | A-6 |
| D012 | A-6 |
| D013 | A-6 |
| D024 | C-14 |
| D025 | E-5 |
| D026 | D-12 |
| D028 | D-15 |
| D029 | D-15 |
| D030 | D-15 |
| D031 | D-9 |
| D032 | C-8 |
| D033 | C-14 |
| D034 | C-11 |
| D035 | C-12 |
| D036 | C-6 |
| D037 | C-5 |
| D038 | D-7 |
| D039 | A-15 |
| D040 | C-15 |
| D041 | D-13 |
| D042 | A-1 |
| D043 | A-1 |
| D044 | A-1 |
| D045 | B-2 |
| IC001 | B-11 |
| IC002 | B-4 |
| IC003 | B-7 |
| IC004 | B-6 |
| IC005 | B-13 |
| IC006 | B-9 |
| Q001 | C-3 |
| RV001 | D-8 |
| TP001 | A-2 |

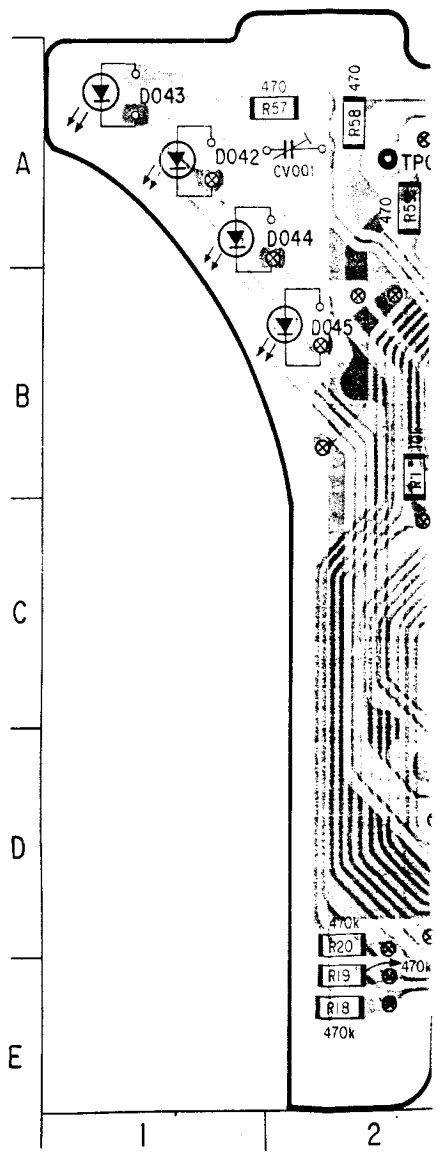




## TIMER/MODE CONTROL(1) TI

## FT-13(TIMER/MODE CONTROL/JOG SHUTTLE), FR-24(LED), CB-8(THROUGH) PRINTED V

—Ref. No. FT-13 BOARD : 11,000 series, FR-24 BOARD : 11,200 series, CB-8 BOARD : 11,400 series—

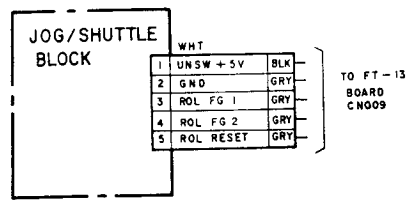


### FT-13 BOARD

| | |
|---|---|
| CV001 | A-2 |
| D001 | D-10 |
| D002 | D-10 |
| D003 | D-11 |
| D004 | D-11 |
| D005 | D-11 |
| D006 | C-11 |
| D007 | C-12 |
| D008 | A-15 |
| D009 | E-12 |
| D010 | B-10 |
| D011 | A-6 |
| D012 | A-6 |
| D013 | A-6 |
| D024 | C-14 |
| D025 | E-5 |
| D026 | D-12 |
| D028 | D-15 |
| D029 | D-15 |
| D030 | D-15 |
| D031 | D-9 |
| D032 | C-8 |
| D033 | C-14 |
| D034 | C-11 |
| D035 | C-12 |
| D036 | C-6 |
| D037 | C-5 |
| D038 | D-7 |
| D039 | A-15 |
| D040 | C-15 |
| D041 | D-13 |
| D042 | A-1 |
| D043 | A-1 |
| D044 | A-1 |
| D045 | B-2 |
| IC001 | B-11 |
| IC002 | B-4 |
| IC003 | B-7 |
| IC004 | B-6 |
| IC005 | B-13 |
| IC006 | B-9 |
| Q001 | C-3 |
| RV001 | D-8 |
| TP001 | A-2 |

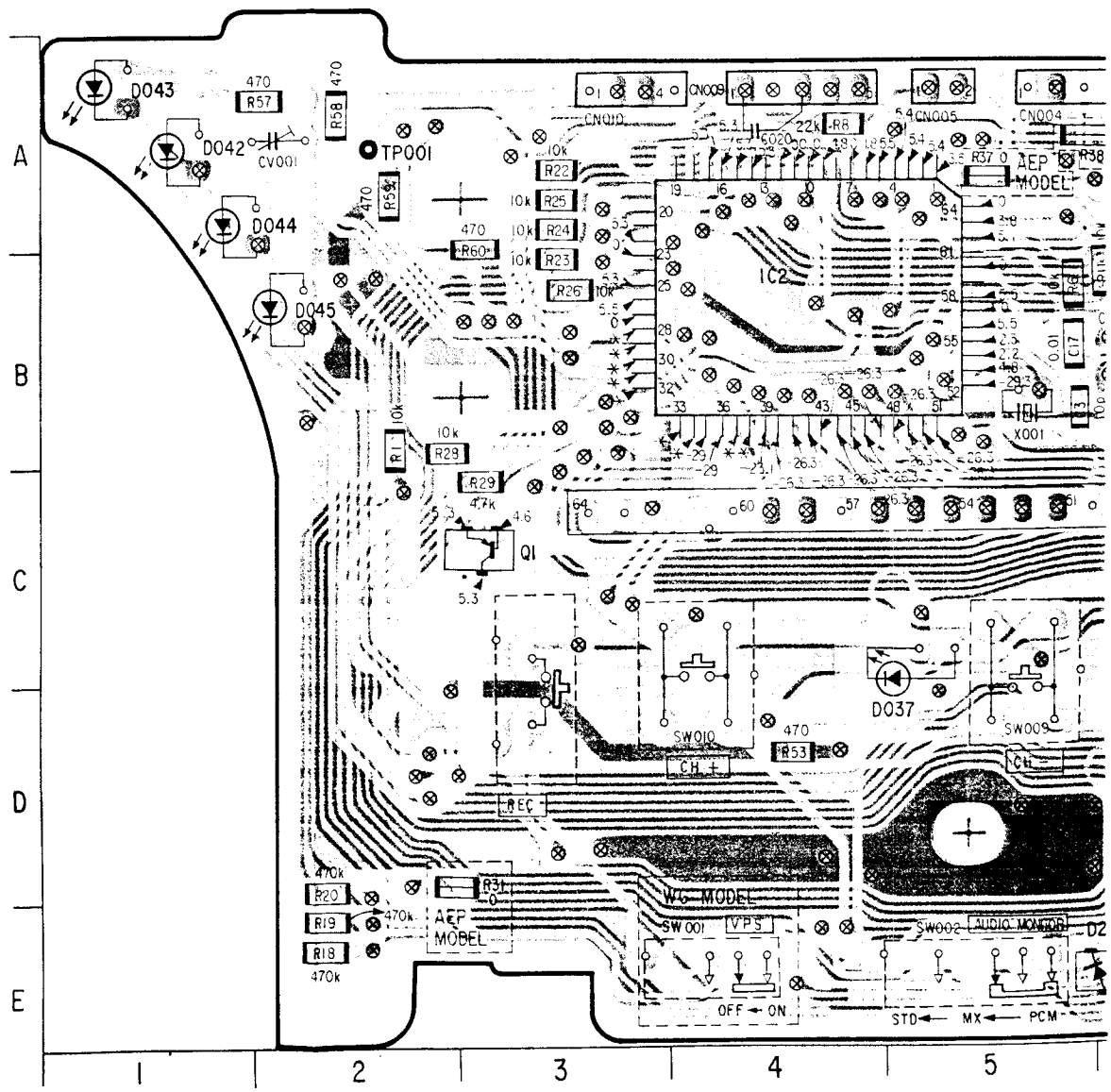




# TIMER/MODE CONTROL(1)

TIMER/MODE CONTROL(1)

## ), CB-8(THROUGH) PRINTED WIRING BOARDS

CB-8 BOARD : 11, 400 series—

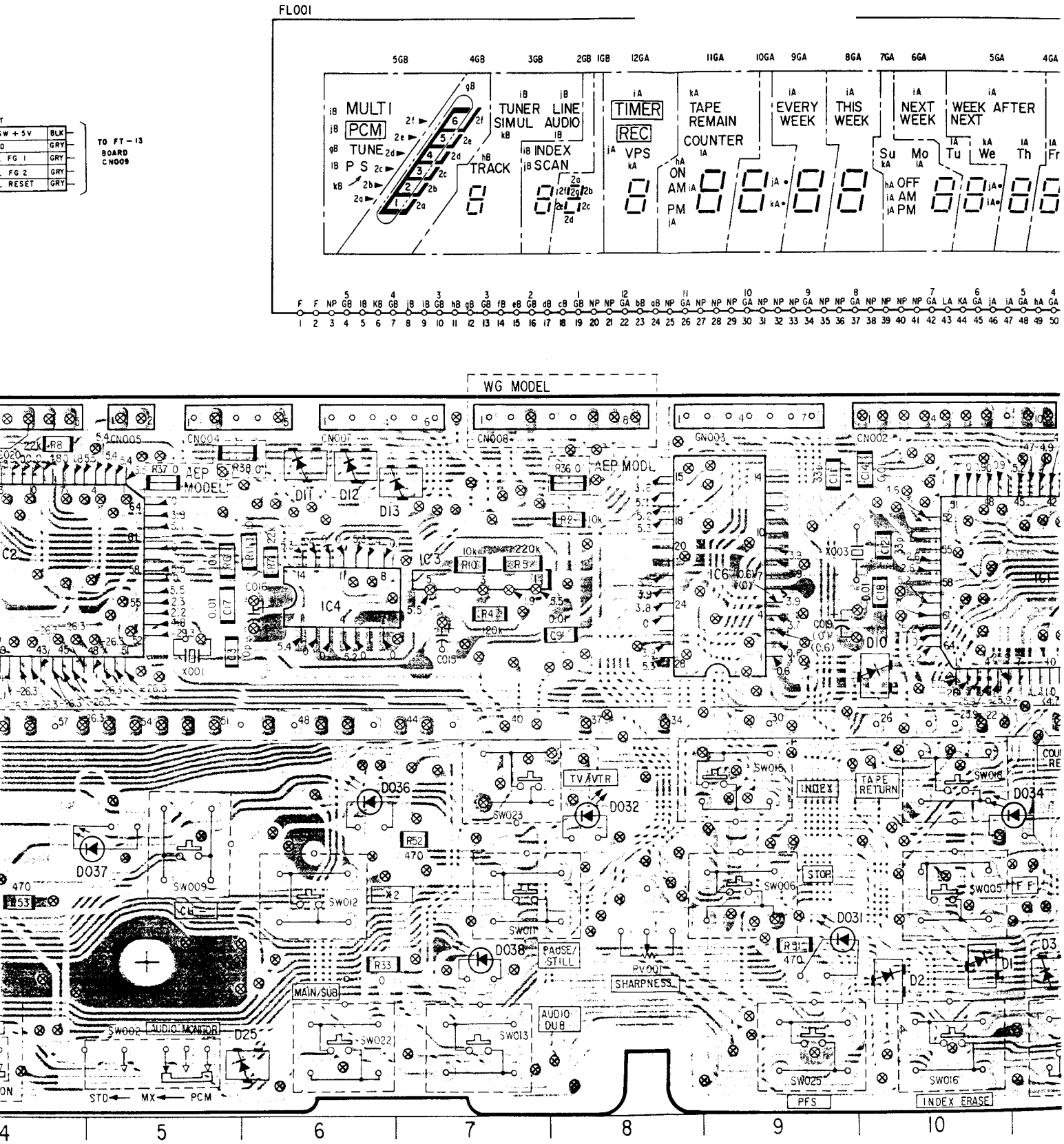


NTROL(1)

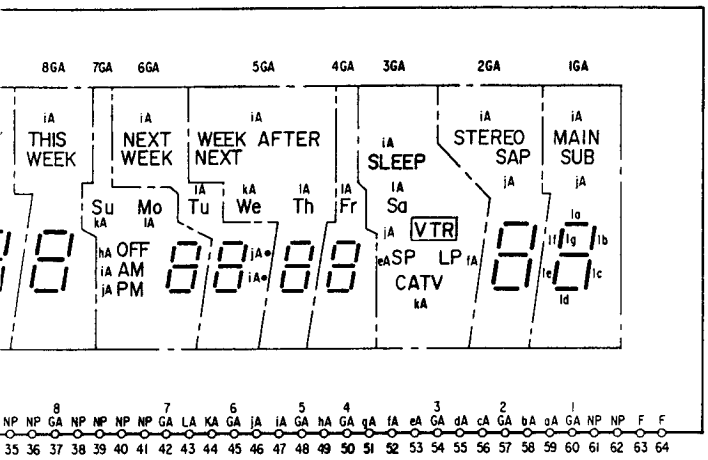


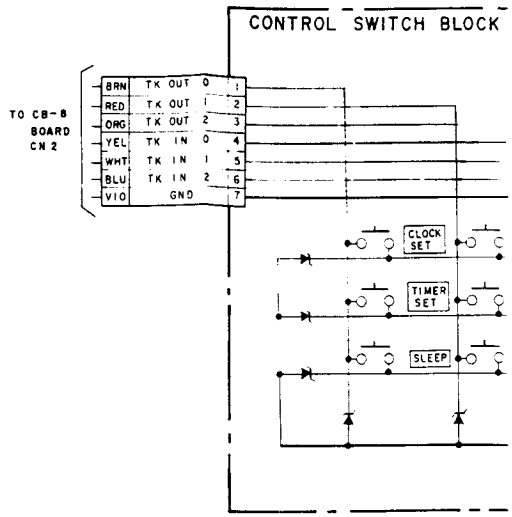


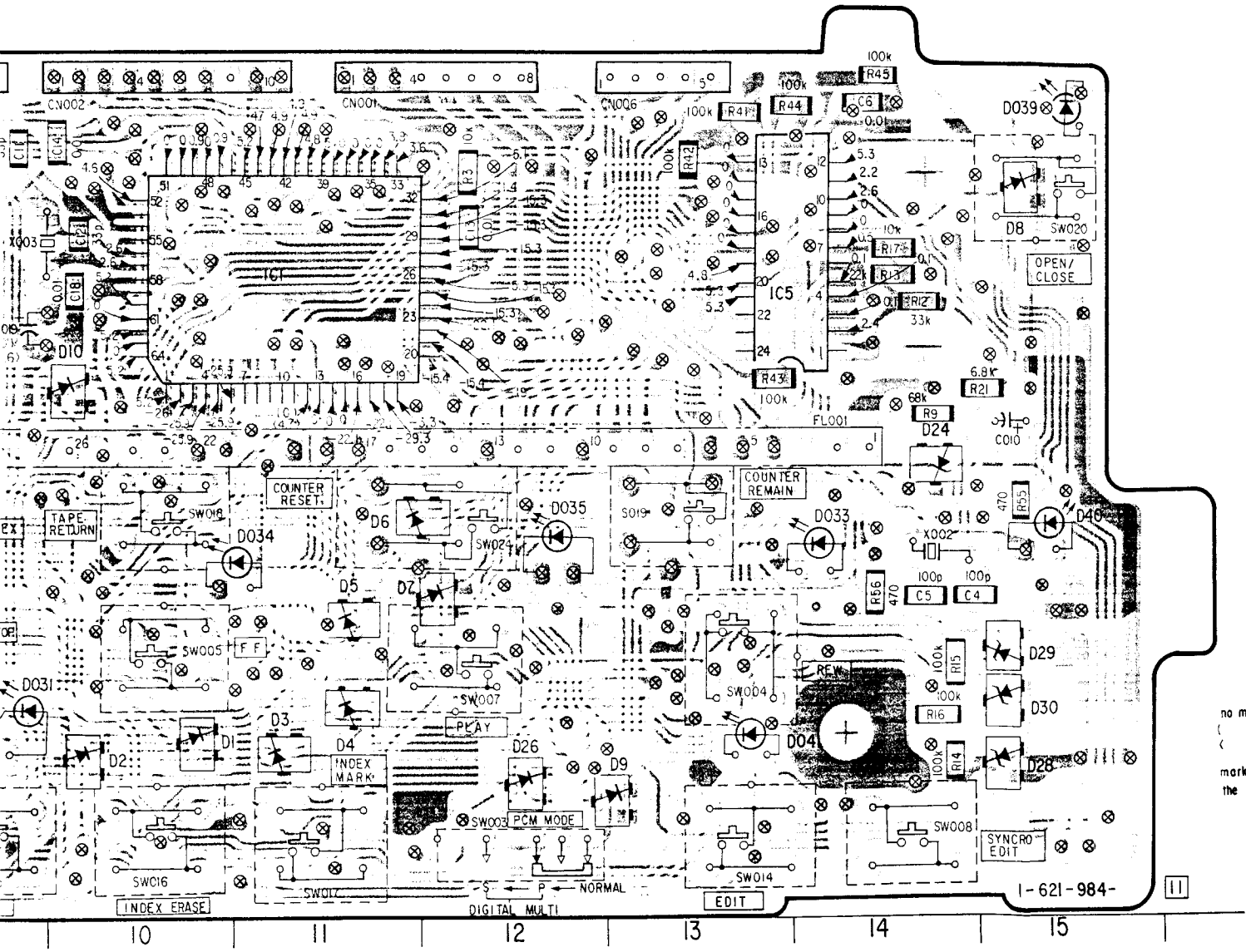




## TIMER/MODE CONTROL(1) TIMER/MO

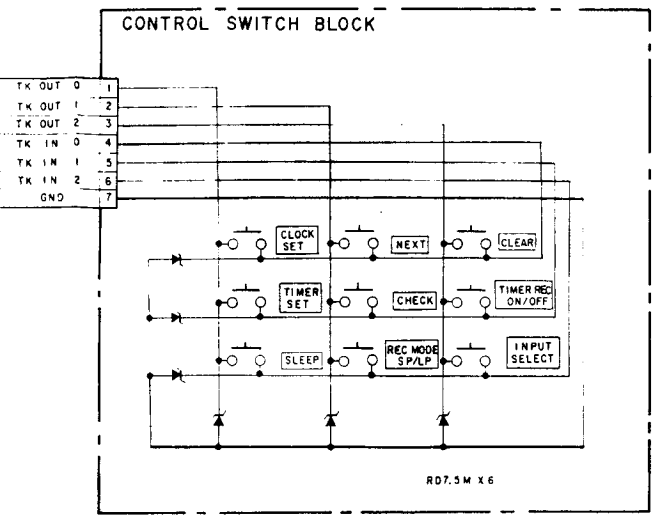


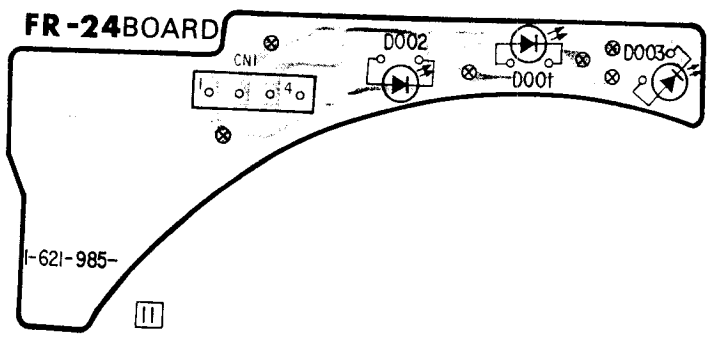


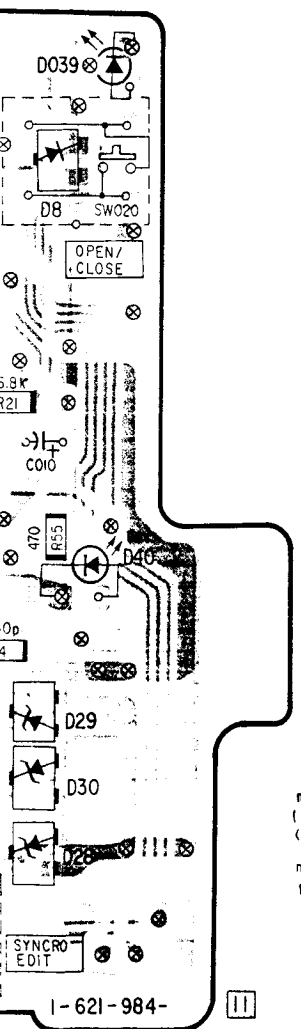


no mark : LP REC/PB mode
( ) : LP REC mode
( ) : LP PB mode

marked * is not be able to measure the voltage of its position

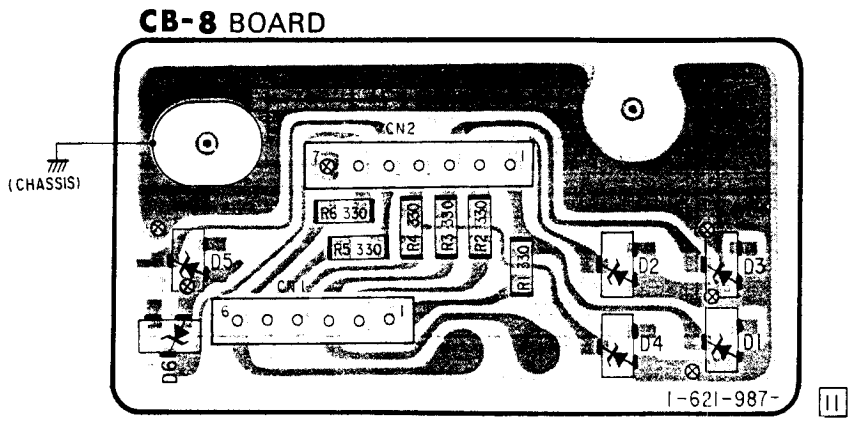


15

## FT-13(TIMER/MODE CONTROL/JOG SHUTTLE), FR-24(LED), CB-8(THROUGH) SCHEMATIC DIAGRAM

—Ref. No. FT-13 BOARD : 11,000 series, FR-24 BOARD : 11,200 series, CB-8 BOARD : 11,400 series—

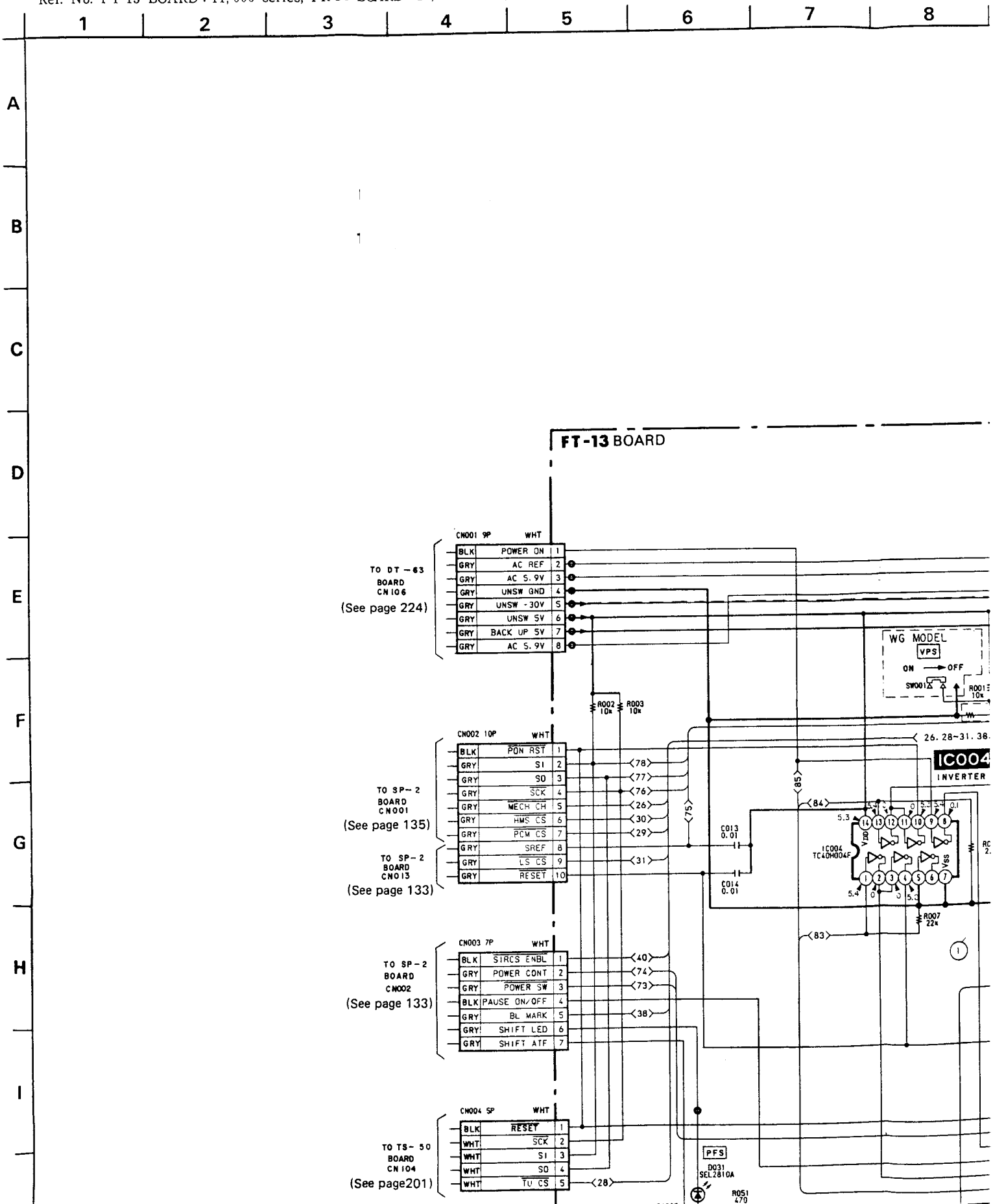

## B-8(THROUGH) SCHEMATIC DIAGRAM

BOARD : 11, 400 series—

5 | 6 | 7 | 8 | 9 | 10 | 11 | 12 | 13

FL001

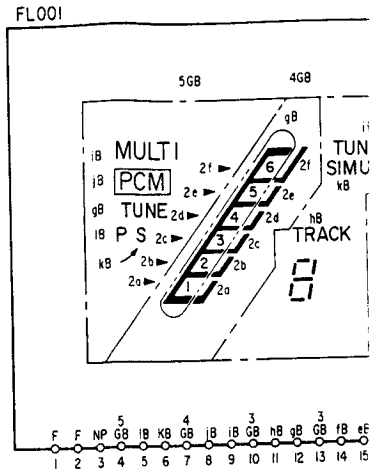


**FT-13** BOARD

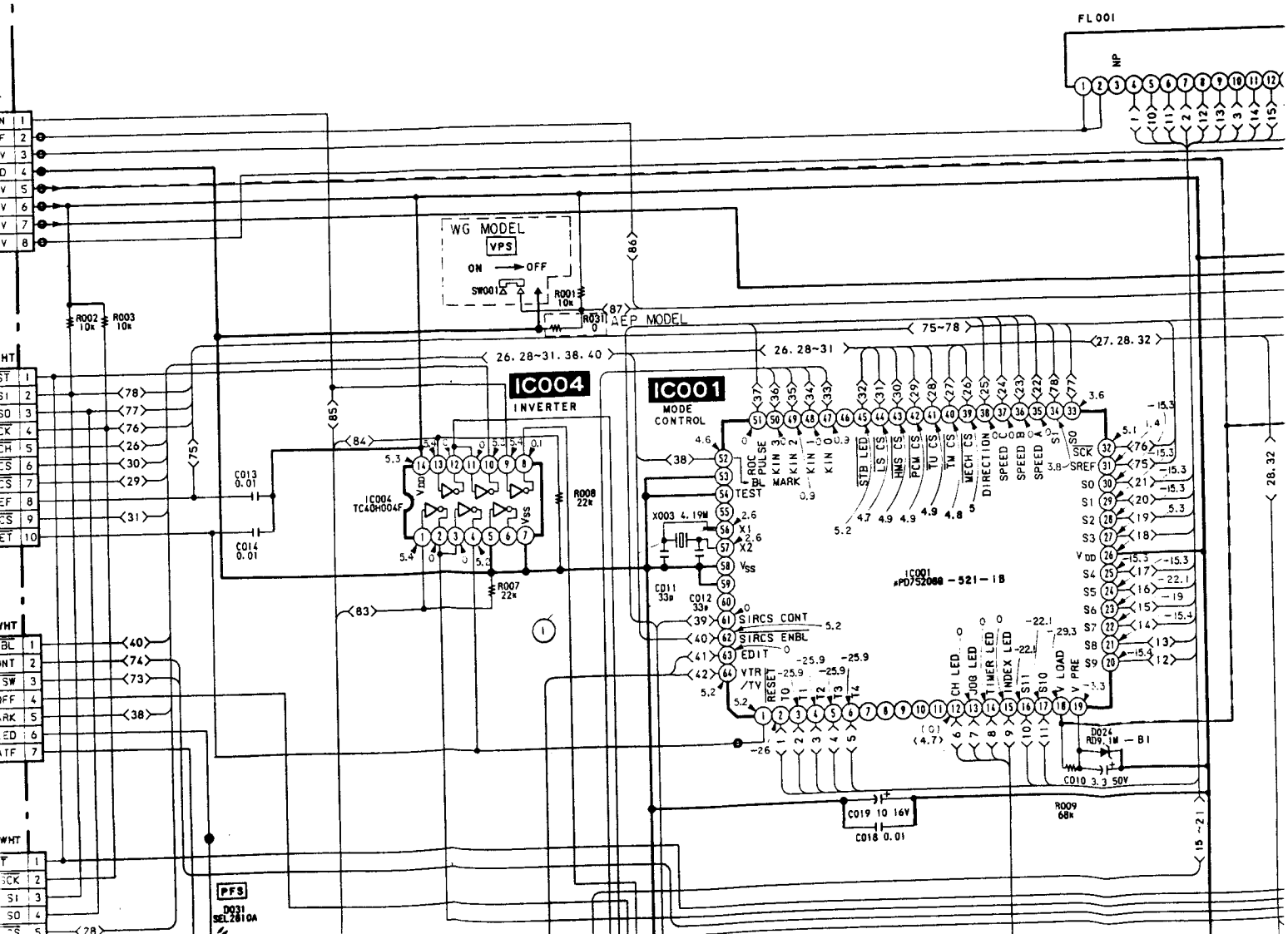

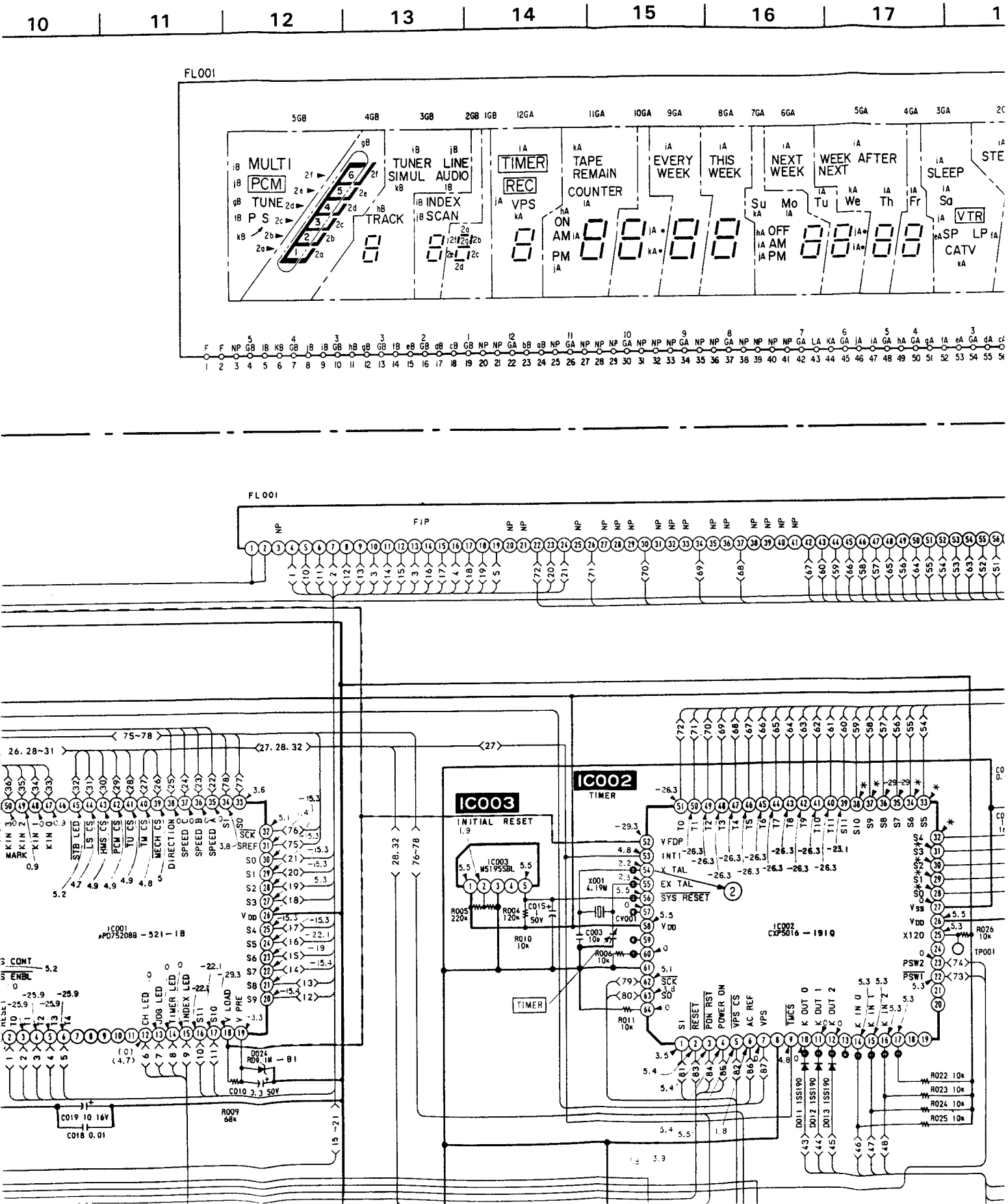

10
11
12
13
14
15
16
17
FL001
MULTI
PCM
TUNE
P S
TRACK
TUNER
SIMUL
LINE
AUDIO
INDEX
SCAN
TIMER
REC
VPS
TAPE
REMAIN
COUNTER
ON
AM
PM
EVERY
WEEK
THIS
WEEK
NEXT
WEEK
AFTER
NEXT
Su
Mo
Tu
We
Th
Fr
OFF
AM
PM
SLEEP
Sa
VTR
SP
LP
CATV
FL001
FIP
IC001
μPD752088 - 521 - 1B
IC002
TIMER
IC003
INITIAL RESET
IC003
MS1955BL
IC002
CXP5016 - 191Q
TIMER
X001
4.19M
CV001
X120
TP001

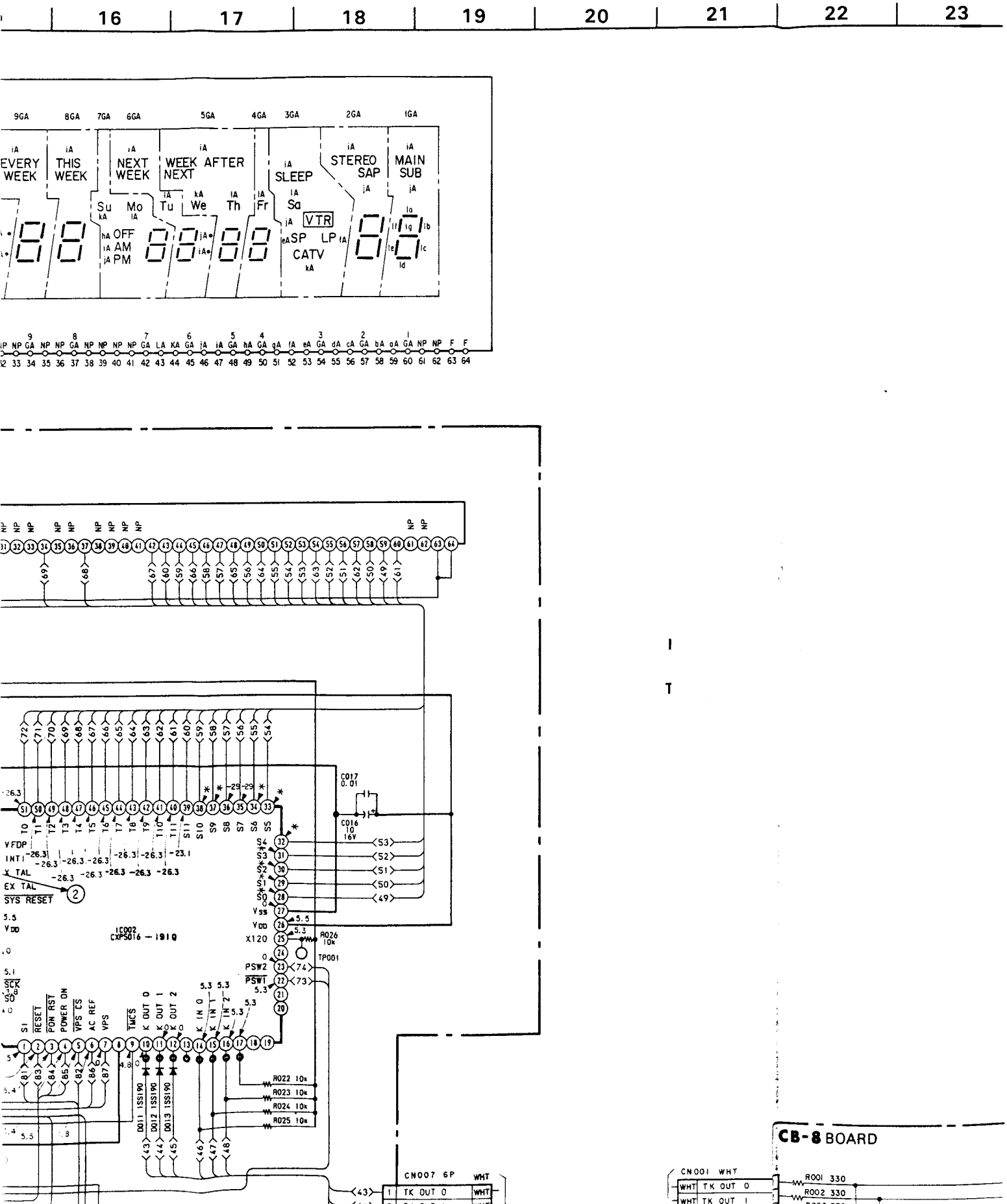
16
17
18
19
20
21
22
23
9GA
8GA
7GA
6GA
5GA
4GA
3GA
2GA
1GA
EVERY WEEK
THIS WEEK
NEXT WEEK
WEEK AFTER NEXT
SLEEP
STEREO SAP
MAIN SUB
Su
Mo
Tu
We
Th
Fr
Sa
VTR
OFF
AM
PM
SP
LP
CATV
IC002
CXP5016 — 1910
C017
0.01
C016
10
16V
R026
10k
TP001
R022 10k
R023 10k
R024 10k
R025 10k
D011 1SS190
D012 1SS190
D013 1SS190
CN007 6P
WHT
TK OUT 0
CB-8 BOARD
CN001 WHT
WHT TK OUT 0
WHT TK OUT 1
R001 330
R002 330

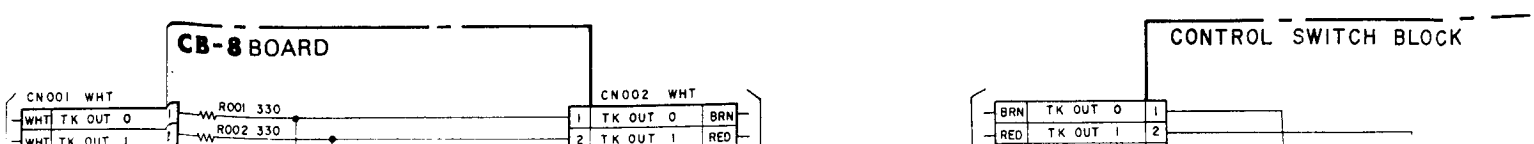
CB-8 BOARD
CN001 WHT
WHT TK OUT 0
WHT TK OUT 1
R001 330
R002 330
CN002 WHT
1 TK OUT 0 BRN
2 TK OUT 1 RED
CONTROL SWITCH BLOCK
BRN TK OUT 0 1
RED TK OUT 1 2

27 | 28 | 29 | 30

A

B

C

D

E

F

G

H

I

**Note:**

- Caution when replacing chip parts.
  New parts must be attached after removal of chip.
  Be careful not to heat the minus side of tantalum capacitor, because it is damaged by the heat.
- All resistors are in ohms, 1/10W unless otherwise noted.
  kΩ: 1000Ω, MΩ: 1000kΩ.
- All capacitors are in μF unless otherwise noted. pF : μμF.
  50V or less are not indicated except for electrolytice. and tantalums.
- All variable and adjustable resistors have characteristic curve B, unless otherwise noted.
- ▭ : panel designation.
- ▭ : adjustment for repair.
- ——— : B + bus.
- - - - : B − bus.
- Voltages are dc with respect to ground unless otherwise noted.
- Readings are taken with a colour-bar signal input.
- Readings are taken with a digital multimeter (DC10MΩ).
- Voltage variations may be noted due to normal production tolerances.

When indicating parts by reference number, please include the board name.

**FT-13** BOARD

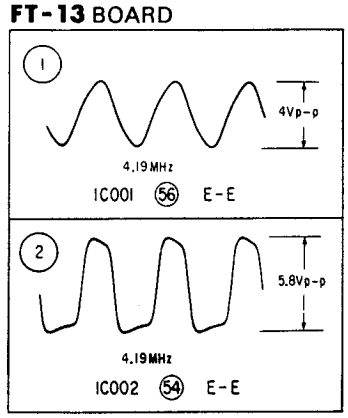


M

Tel

CONTROL SWITCH BLOCK

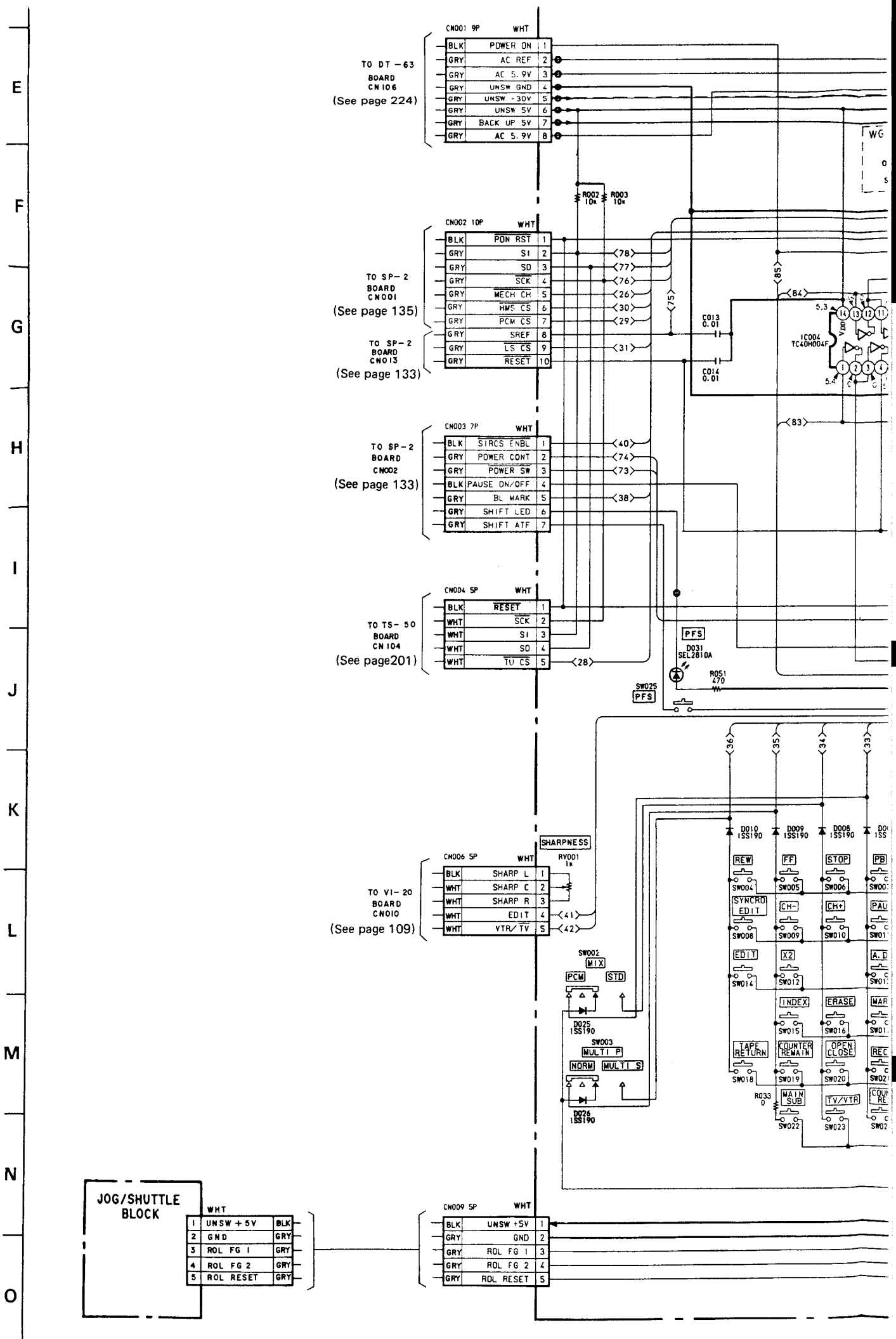




TIMER/MODE CONTROL (1)

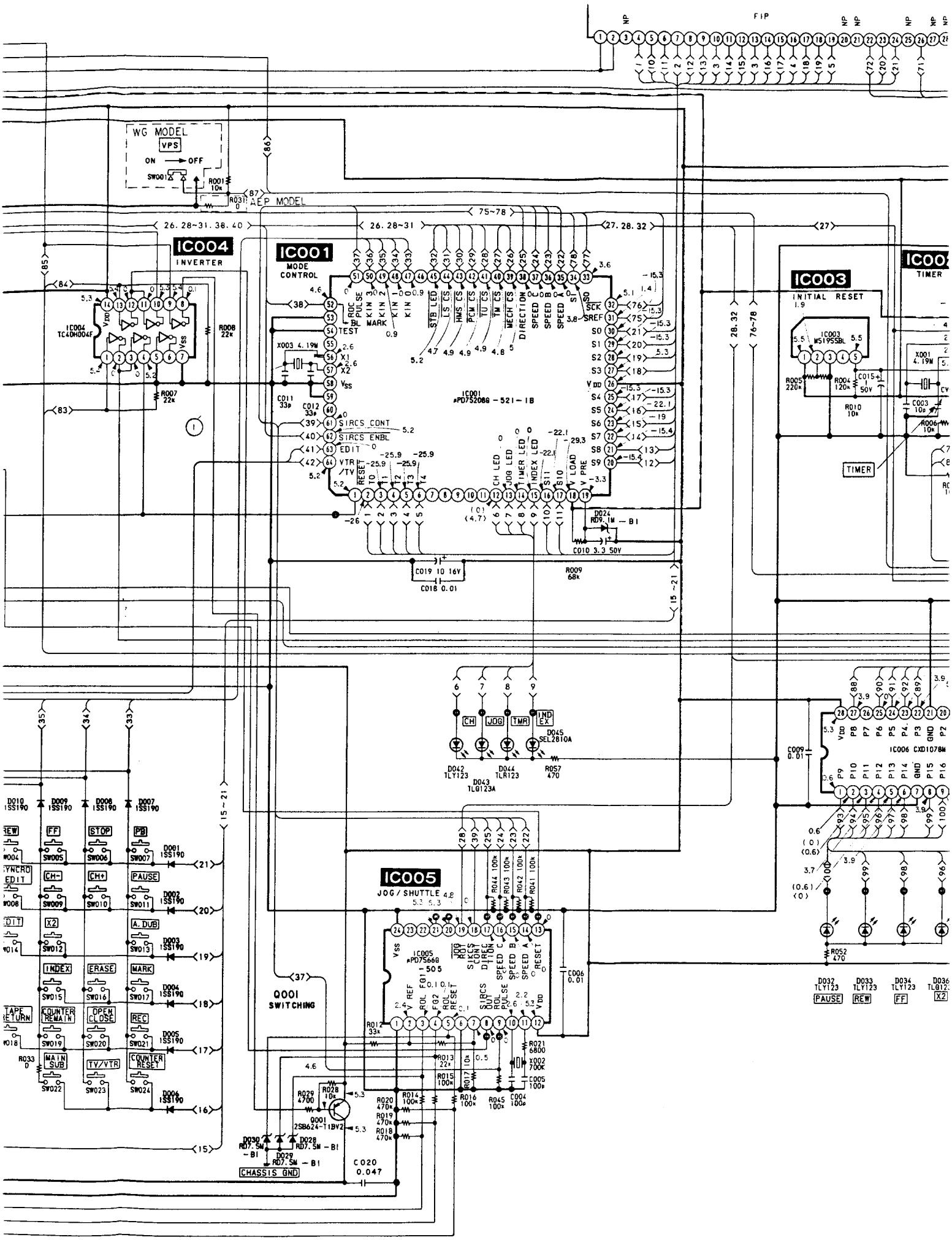




## ROI (1) TIMER/MODE CONTROL (1)

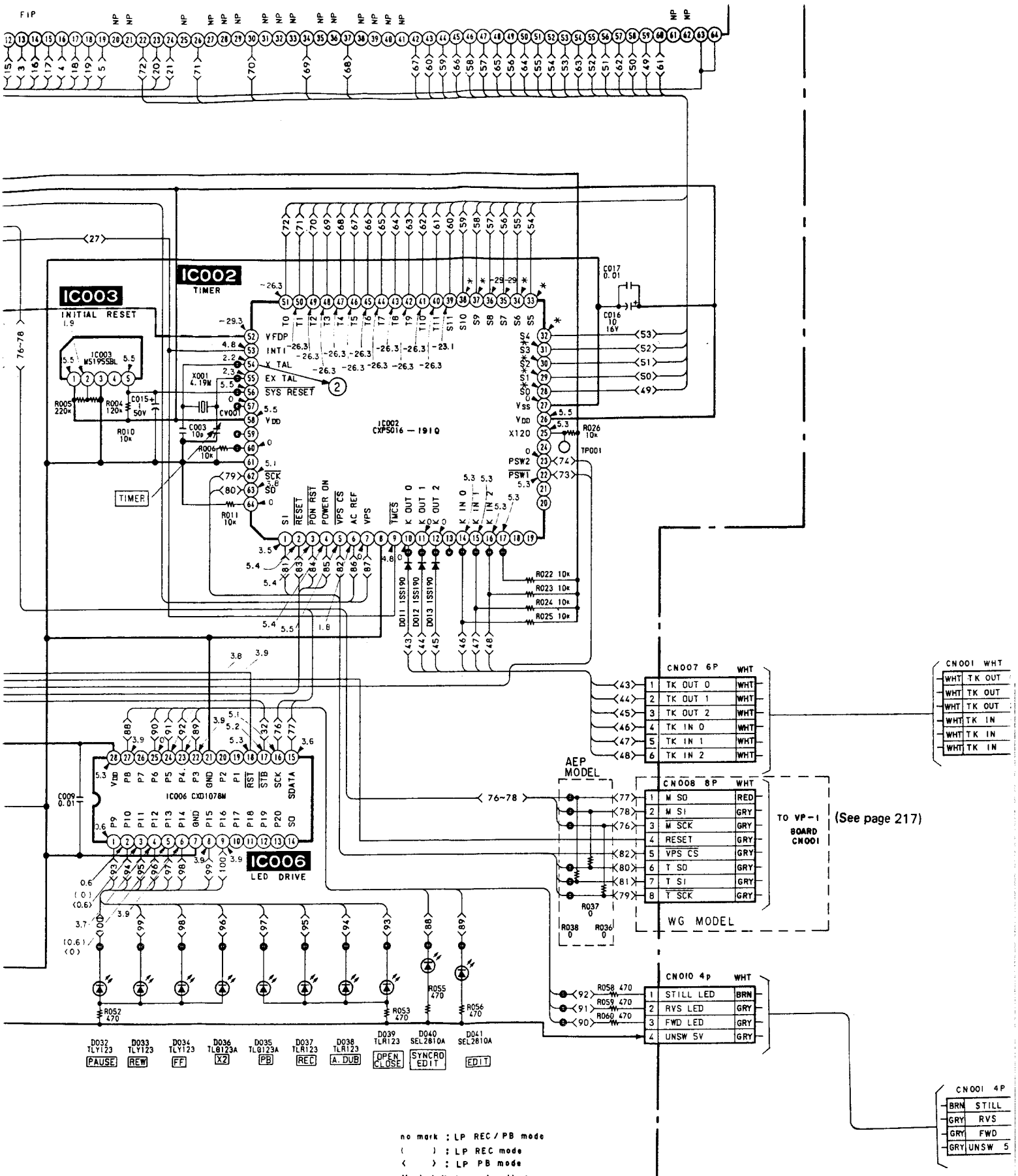
FIP
IC002
TIMER
IC003
INITIAL RESET
IC003 MS1955BL
X001 4.19M
IC002 CXP5016 — 191Q
VFDP
INT1
X TAL
EX TAL
SYS RESET
VDD
VSS
X120
PSW2
PSW1
SCK
SO
SI
RESET
PON RST
POWER ON
VPS CS
AC REF
VPS
TWCS
K OUT 0
K OUT 1
K OUT 2
K IN 0
K IN 1
K IN 2
TIMER
IC006 CXD1078M
IC006
LED DRIVE
VDD
PB
RST
STB
SCK
SDATA
GND
SO
AEP MODEL
WG MODEL
TO VP-1 BOARD CN001
(See page 217)
CN007 6P WHT
1 TK OUT 0 WHT
2 TK OUT 1 WHT
3 TK OUT 2 WHT
4 TK IN 0 WHT
5 TK IN 1 WHT
6 TK IN 2 WHT
CN008 8P WHT
1 M SO RED
2 M SI GRY
3 M SCK GRY
4 RESET GRY
5 VPS CS GRY
6 T SO GRY
7 T SI GRY
8 T SCK GRY
CN010 4p WHT
1 STILL LED BRN
2 RVS LED GRY
3 FWD LED GRY
4 UNSW 5V GRY
CN001 WHT
WHT TK OUT
WHT TK OUT
WHT TK OUT
WHT TK IN
WHT TK IN
WHT TK IN
CN001 4P
BRN STILL
GRY RVS
GRY FWD
GRY UNSW 5
D032 TLY123 PAUSE
D033 TLY123 REW
D034 TLY123 FF
D036 TLG123A XZ
D035 TLG123A PB
D037 TLR123 REC
D038 TLR123 A.DUB
D039 TLR123 OPEN CLOSE
D040 SEL2810A SYNCRO EDIT
D041 SEL2810A EDIT
no mark : LP REC / PB mode
( ) : LP REC mode
< > : LP PB mode
Marked * is not be able to measure the voltage of its positon

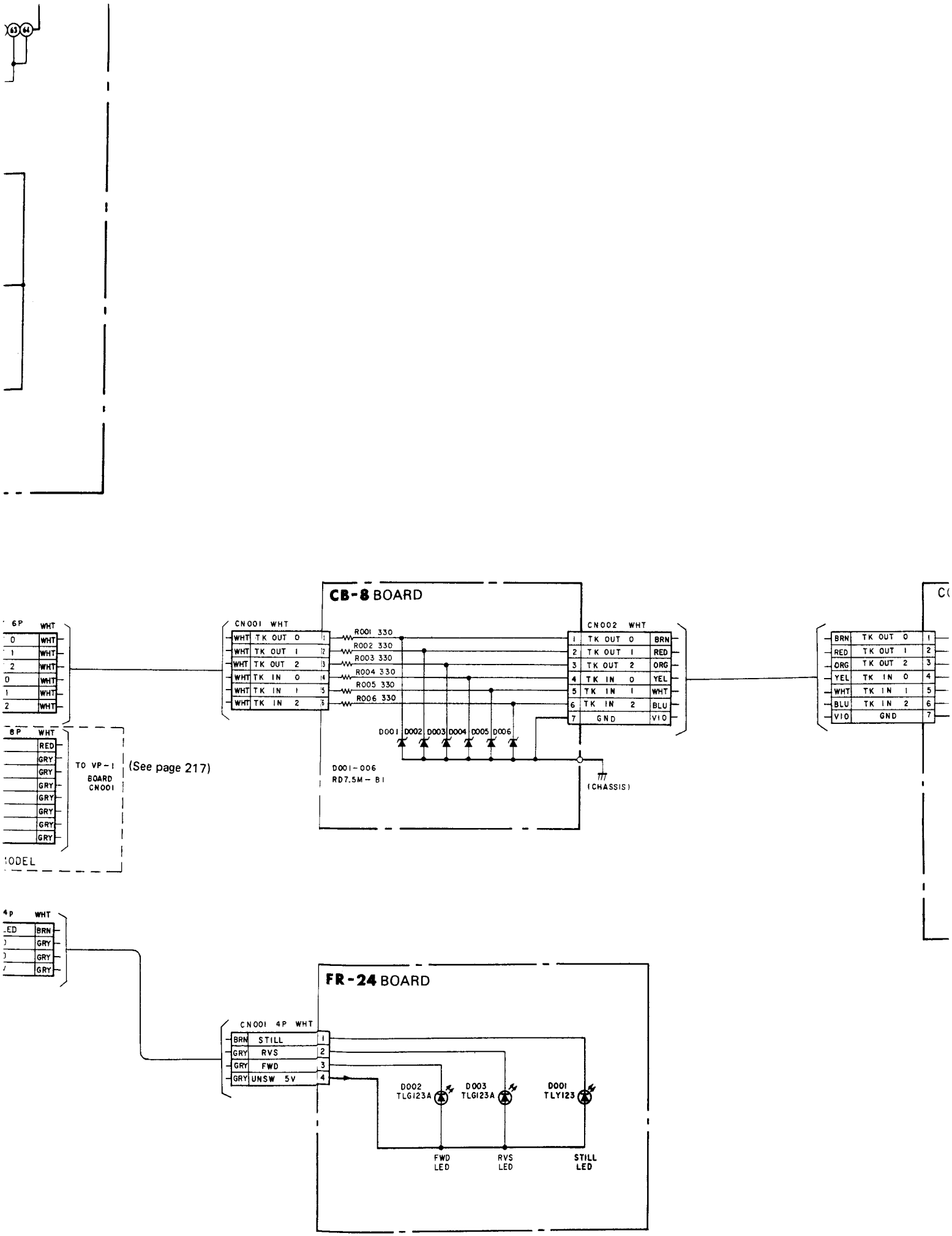
CB-8 BOARD
CN001 WHT
CN002 WHT
R001 330
R002 330
R003 330
R004 330
R005 330
R006 330
D001 D002 D003 D004 D005 D006
D001-006
RD7.5M-B1
(CHASSIS)
TO VP-1 BOARD CN001
(See page 217)
FR-24 BOARD
CN001 4P WHT
STILL
RVS
FWD
UNSW 5V
D002 TLG123A
D003 TLG123A
D001 TLY123
FWD LED
RVS LED
STILL LED

**FT-13** BOARD

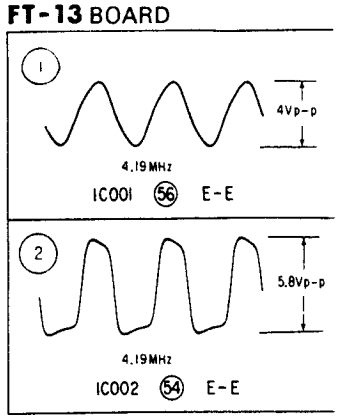


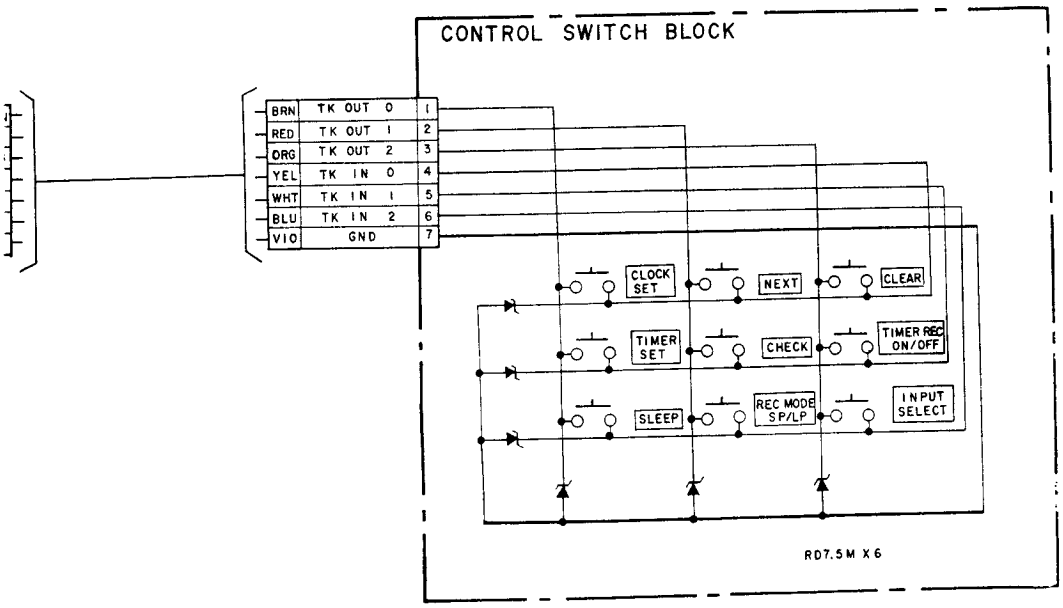


E F G H I J K L M N O

**FT-13** BOARD

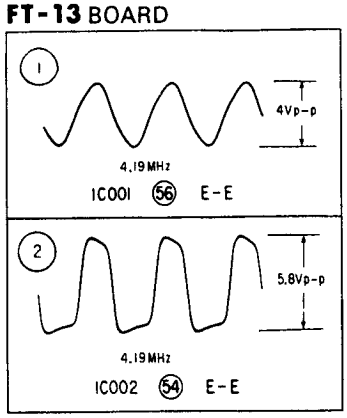


TROL SWITCH BLOCK

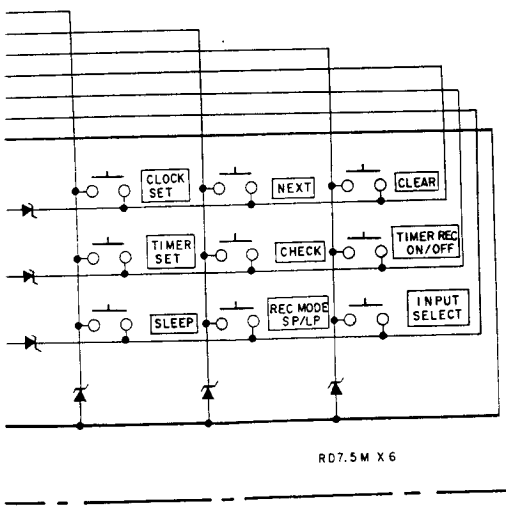


E F G H I J K L M N O

Note:

- ⟩— : indicates a lead wire mounted on the component side.
- ●— : indicates a lead wire mounted on the printed side.
- : soldering side.
- : B+ Pattern.

When indicating parts by reference number, please include the board name.

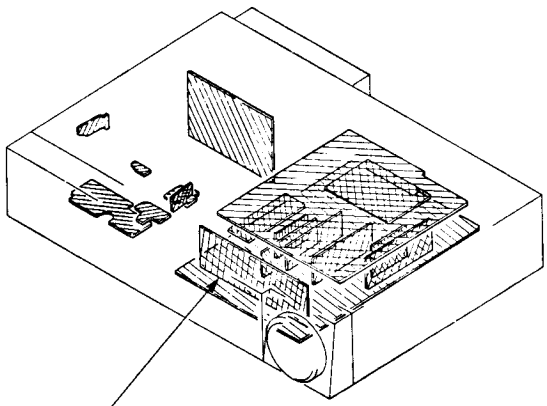

VP-1(WG ONLY)
(VPS/BUS SELECT)

## VP-1(VPS/BUS SELECT) PRINTED WI

—Ref. No. VP-1 BOARD : 12, 000 series—

## VP-1 BOARD (WG MODEL)

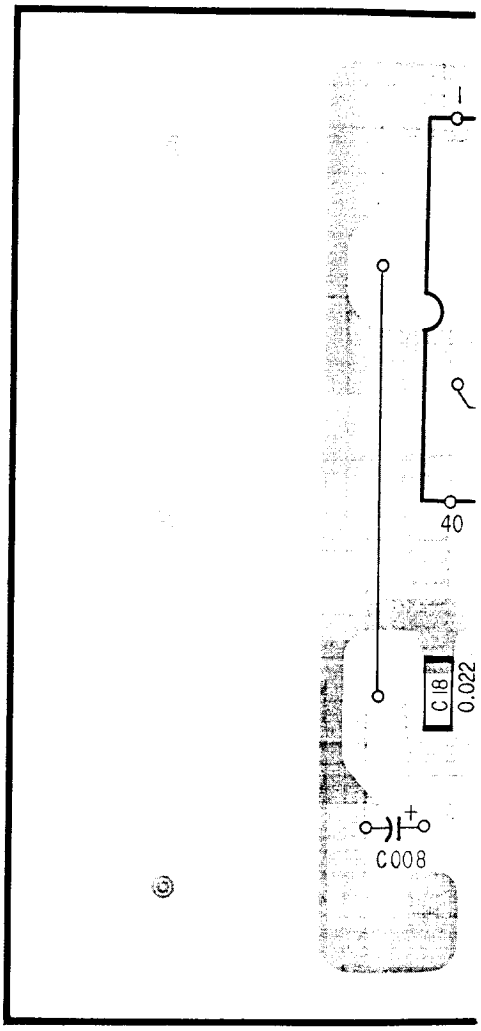

**VP-1(VPS/BUS SELECT) PRINTED WIRING BOARD (WG MODEL)**
—Ref. No. VP-1 BOARD : 12,000 series—

# VP-1 BOARD (WG MODEL)

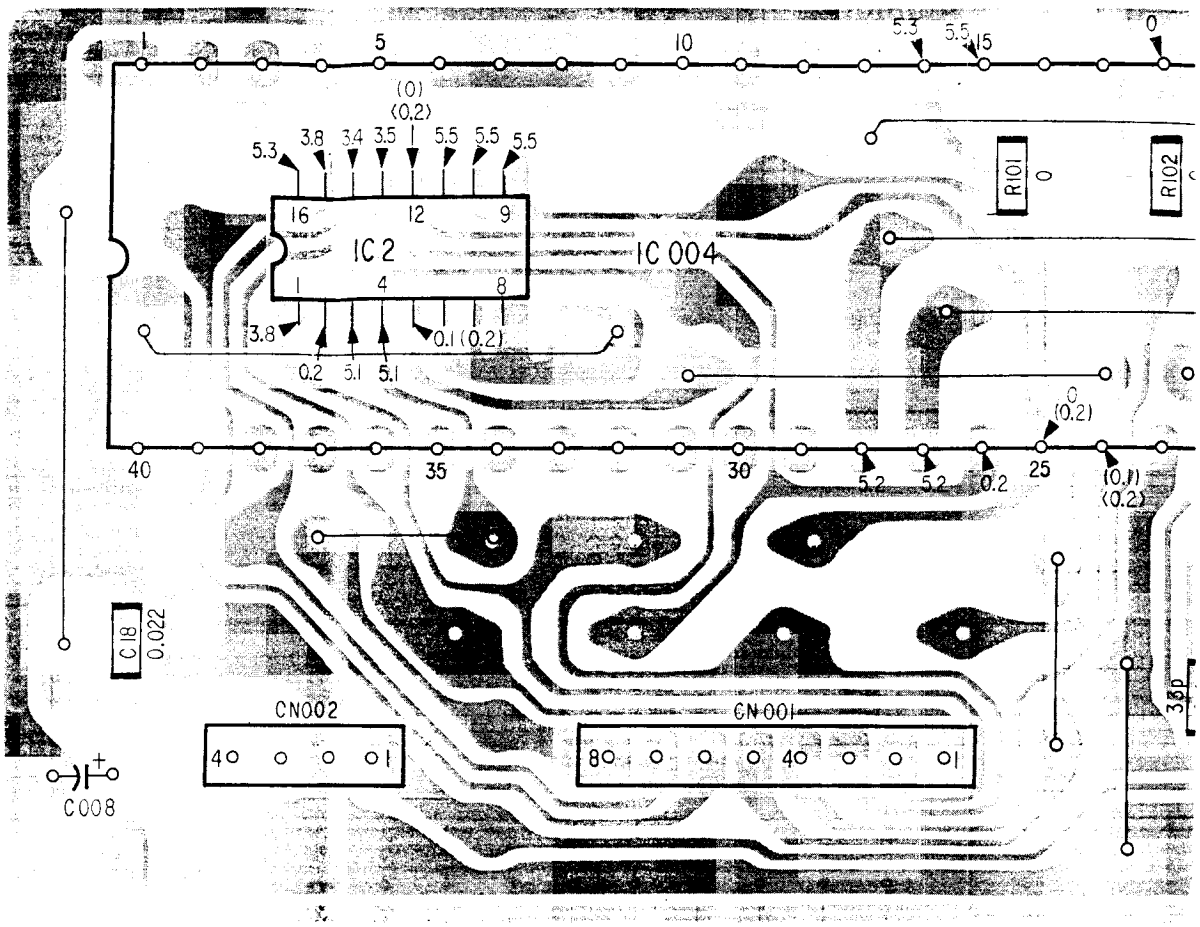

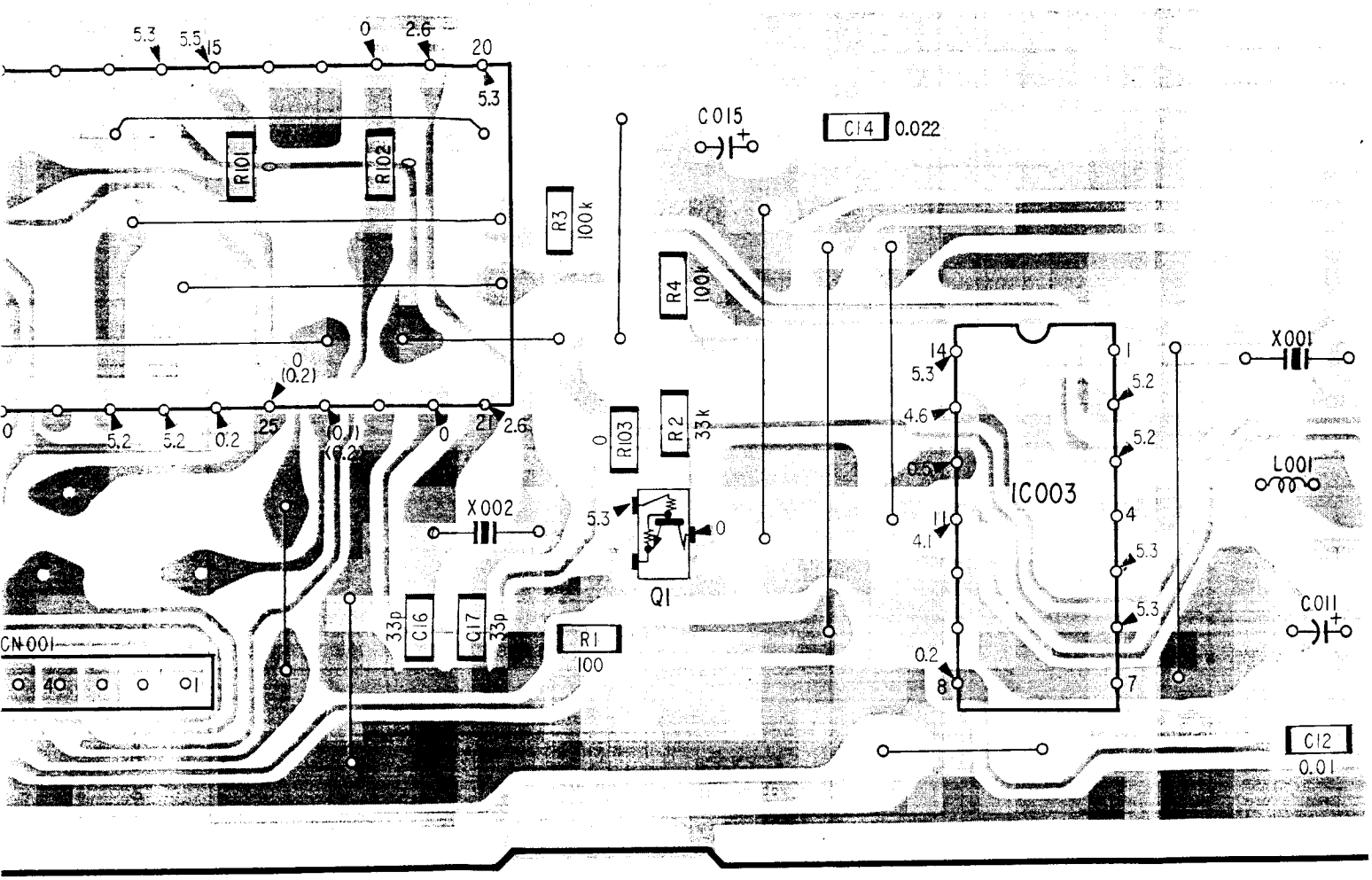




## TIMER/MODE CONTROL(2) TIMER/M

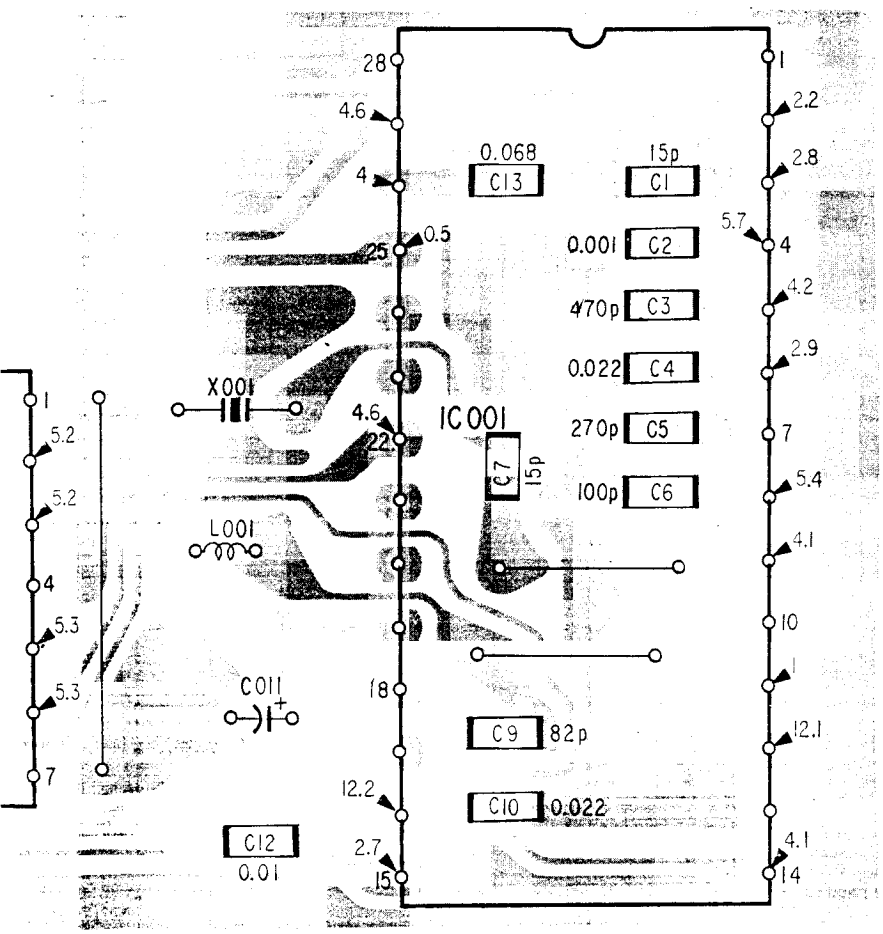


I - 622 - 007 - 11

no mark : LP REC / PB mode
( ) : LP REC mode
〈 〉 : LP PB mode

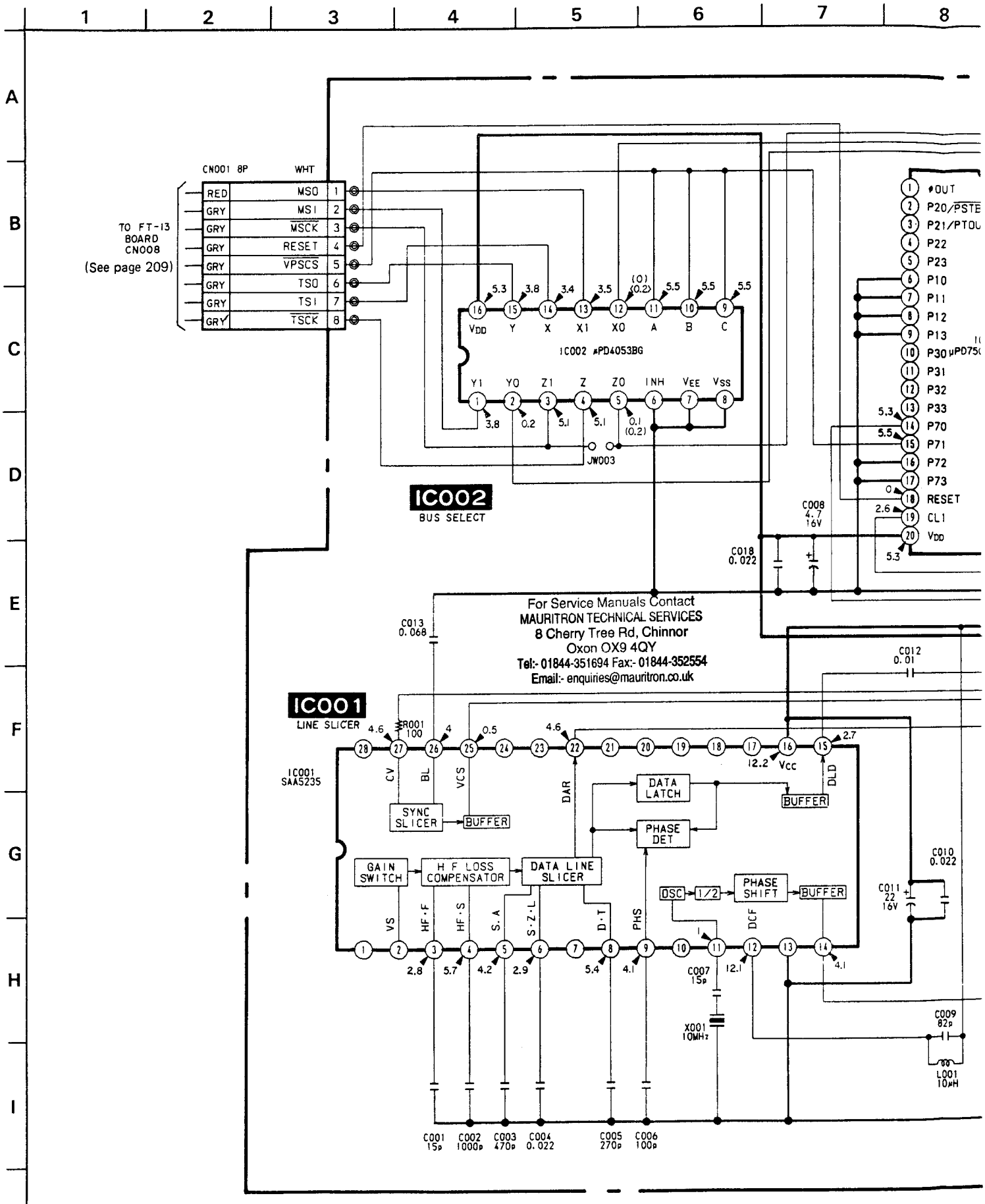
CN001 8P
WHT
RED MS0 1
GRY MS1 2
GRY MSCK 3
GRY RESET 4
GRY VPSCS 5
GRY TS0 6
GRY TS1 7
GRY TSCK 8
TO FT-13 BOARD CN008
(See page 209)
IC002 μPD4053BG
VDD Y X X1 X0 A B C
Y1 Y0 Z1 Z Z0 INH VEE VSS
JW003
IC002
BUS SELECT
P OUT
P20/PSTE
P21/PTOU
P22
P23
P10
P11
P12
P13
P30 μPD75(
P31
P32
P33
P70
P71
P72
P73
RESET
CL1
VDD
C008 4.7 16V
C018 0.022
For Service Manuals Contact
MAURITRON TECHNICAL SERVICES
8 Cherry Tree Rd, Chinnor
Oxon OX9 4QY
Tel:- 01844-351694 Fax:- 01844-352554
Email:- enquiries@mauritron.co.uk
C013 0.068
C012 0.01
IC001
LINE SLICER
IC001 SAA5235
R001 100
CV BL VCS DAR DLD
SYNC SLICER
BUFFER
DATA LATCH
PHASE DET
GAIN SWITCH
H F LOSS COMPENSATOR
DATA LINE SLICER
DSC 1/2
PHASE SHIFT
VS HF·F HF·S S.A S·Z·L D·T PHS DCF
C010 0.022
C011 22 16V
C007 15p
X001 10MHz
C009 82p
L001 10μH
C001 15p
C002 1000p
C003 470p
C004 0.022
C005 270p
C006 100p

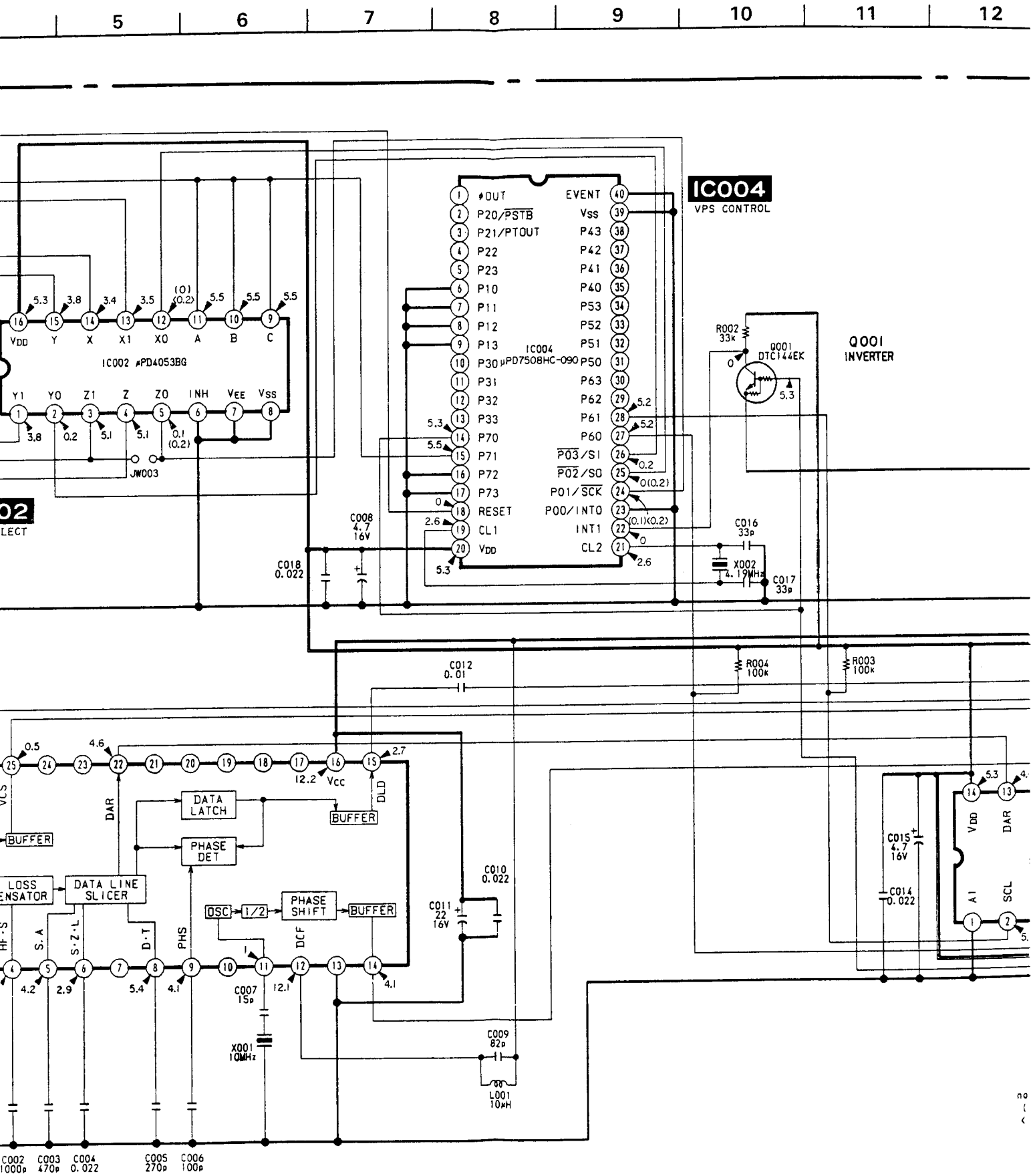




## TIMER/MODE CONTROL(2)

TIMER/MODE CONTROL(2)

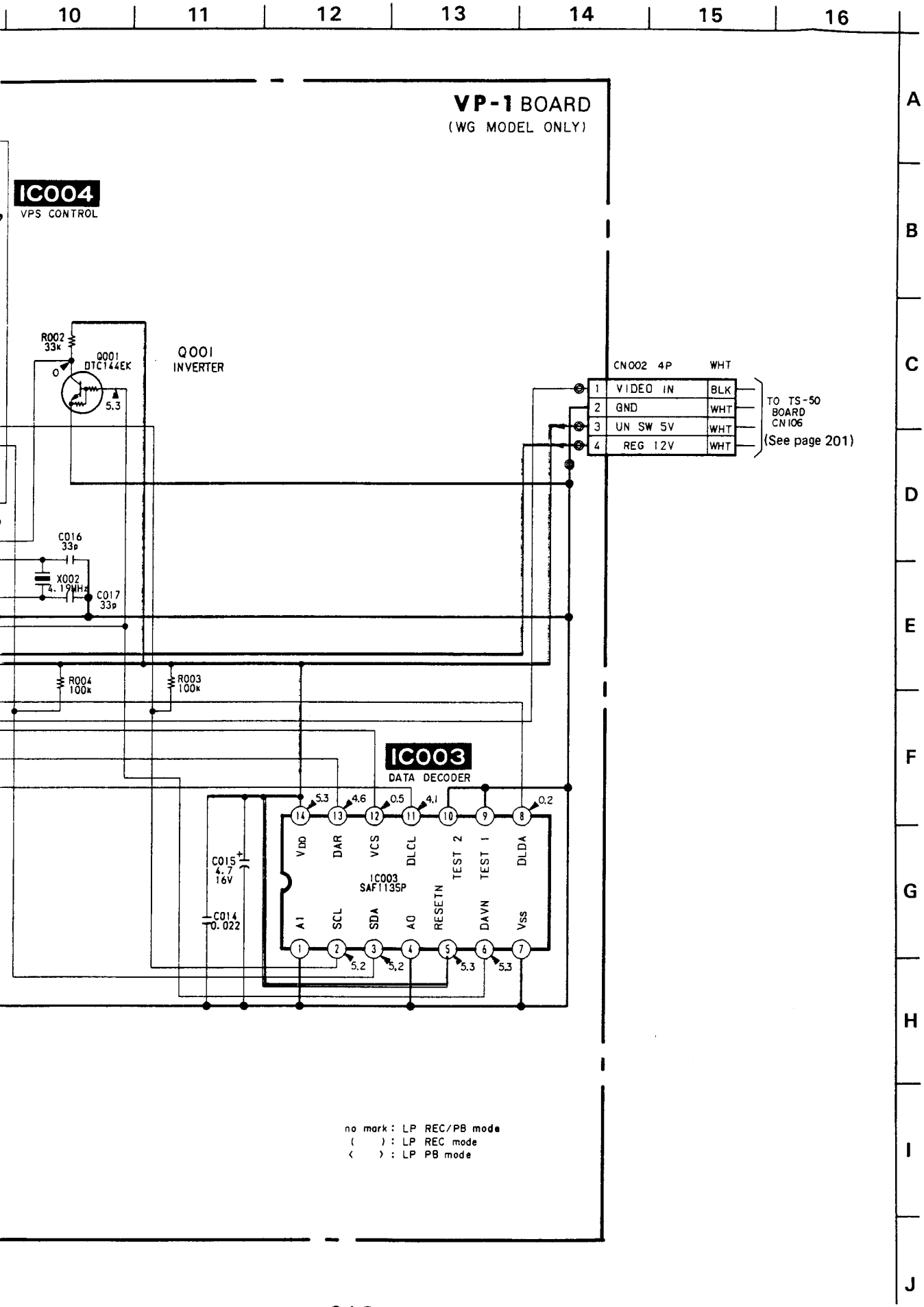


Note:

- Caution v
  New parts
  Be carefu
  because it
- All resistc
  kΩ: 1000
- All capaci
  50V or le
  tantalums.
- All variab
  unless oth
- ——— : B +
- Voltages a
- Readings a
- Readings a
- Voltage v
  tolerances

When indic
ence num
the board na



ODE CONTROL(2)

**Note:**

- Caution when replacing chip parts.
  New parts must be attached after removal of chip.
  Be careful not to heat the minus side of tantalum capacitor, because it is damaged by the heat.
- All resistors are in ohms, 1/10W unless otherwise noted.
  kΩ: 1000Ω, MΩ: 1000kΩ.
- All capacitors are in μF unless otherwise noted. pF : μμF.
  50V or less are not indicated except for electrolytice. and tantalums.
- All variable and adjustable resistors have characteristic curve B, unless otherwise noted.
- ——— : B + bus.
- Voltages are dc with respect to ground unless otherwise noted.
- Readings are taken with a colour-bar signal input.
- Readings are taken with a digital multimeter (DC10MΩ).
- Voltage variations may be noted due to normal production tolerances.

When indicating parts by reference number, please include the board name.

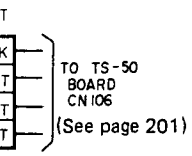


A B C D E F G H I J



# TIMER/MODE CONTROL(2)

## DR-35(SWITCHING REGULATOR), D

—Ref. No. DR-35 BOARD, DT-63 BOARD, D

**Note:**

- ○— : indicates a lead wire mounted on the component side.
- ●— : indicates a lead wire mounted on the printed side.
- : soldering side.
- : B+ Pattern.

- Digital transistor (DR-35:Q208,Q212,Q213,Q214,DL-15:Q001) transistor with resistors.
  Refer to the DR-35,DL-15 boards schamatic diagram for digital transistor.

When indicating parts by reference number, please include the board name.

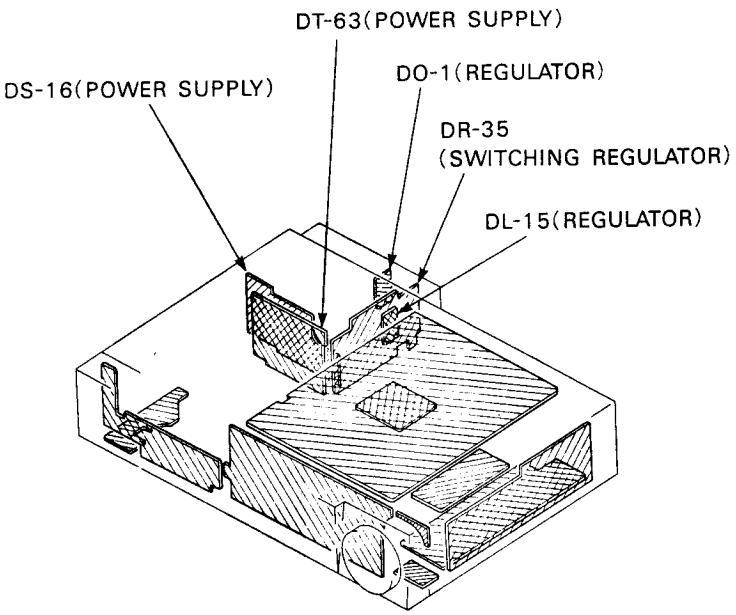


**DS-16**BOARD

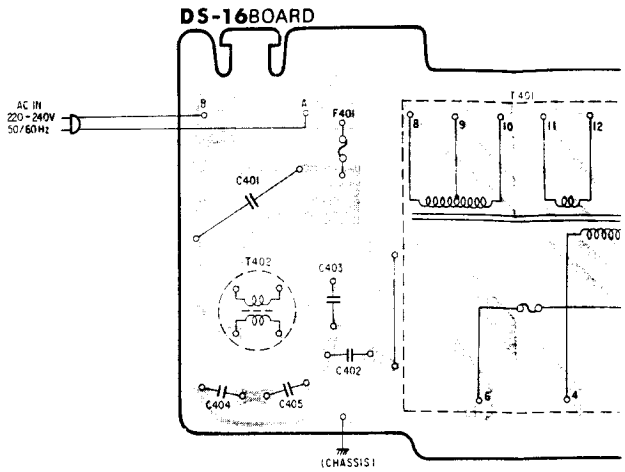


**DO-1**BOARD

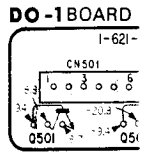


**DL-15** BOARD

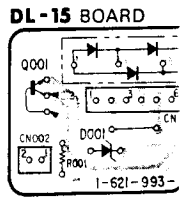

## DR-35(SWITCHING REGULATOR), DT-63(POWER SUPPLY), DL-15(REGULATOR), DO-1

—Ref. No. DR-35 BOARD, DT-63 BOARD, DL-15 BOARD, DO-1 BOARD, DS-16 BOARD : 13,000 series—

nt side.
ide.

-15:Q001)

n for digital

OR)

G REGULATOR)

REGULATOR)

**DS-16**BOARD

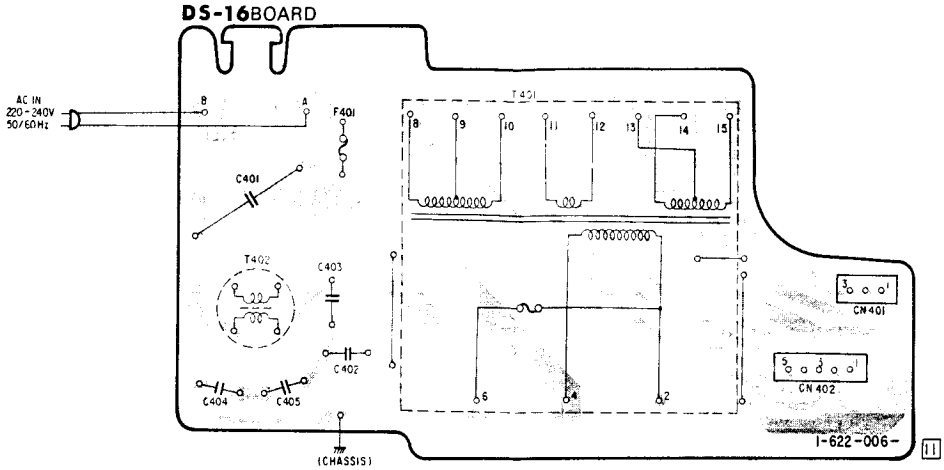


**DO-1**BOARD

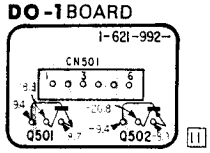


**DL-15** BOARD

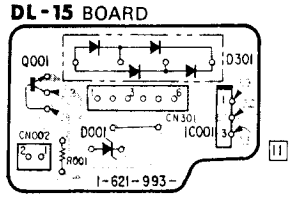


| | |
|---|---|
| D201 | B-2 |
| D202 | D-2 |
| D203 | C-2 |
| D204 | D-8 |
| D205 | B-3 |
| IC201 | E-5 |
| IC202 | C-6 |
| Q201 | B-2 |
| Q202 | A-2 |
| Q203 | A-2 |
| Q204 | D-8 |
| Q205 | D-2 |
| Q206 | D-1 |
| Q207 | D-2 |
| Q208 | E-4 |
| Q209 | C-2 |
| Q210 | C-1 |
| Q211 | C-2 |
| Q212 | D-6 |
| Q213 | D-8 |
| Q214 | E-8 |
| RV201 | D-5 |
| RV202 | E-7 |
| RV203 | B-5 |

**DR-35** B

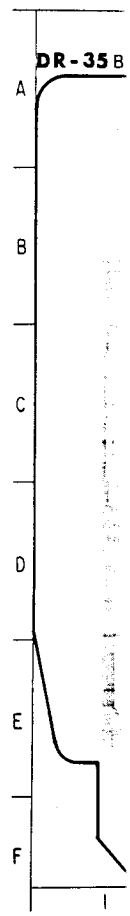

## SUPPLY), DL-15(REGULATOR), DO-1(REGULATOR), DS-16(POWER SUPPLY) PRINTED WIRING BOARDS

1 BOARD, DS-16 BOARD : 13,000 series—

| | |
|---|---|
| D201 | B-2 |
| D202 | D-2 |
| D203 | C-2 |
| D204 | D-8 |
| D205 | B-3 |
| IC201 | E-5 |
| IC202 | C-6 |
| Q201 | B-2 |
| Q202 | A-2 |
| Q203 | A-2 |
| Q204 | D-8 |
| Q205 | D-2 |
| Q206 | D-1 |
| Q207 | D-2 |
| Q208 | E-4 |
| Q209 | C-2 |
| Q210 | C-1 |
| Q211 | C-2 |
| Q212 | D-6 |
| Q213 | D-8 |
| Q214 | E-8 |
| RV201 | D-5 |
| RV202 | E-7 |
| RV203 | B-5 |

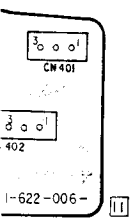


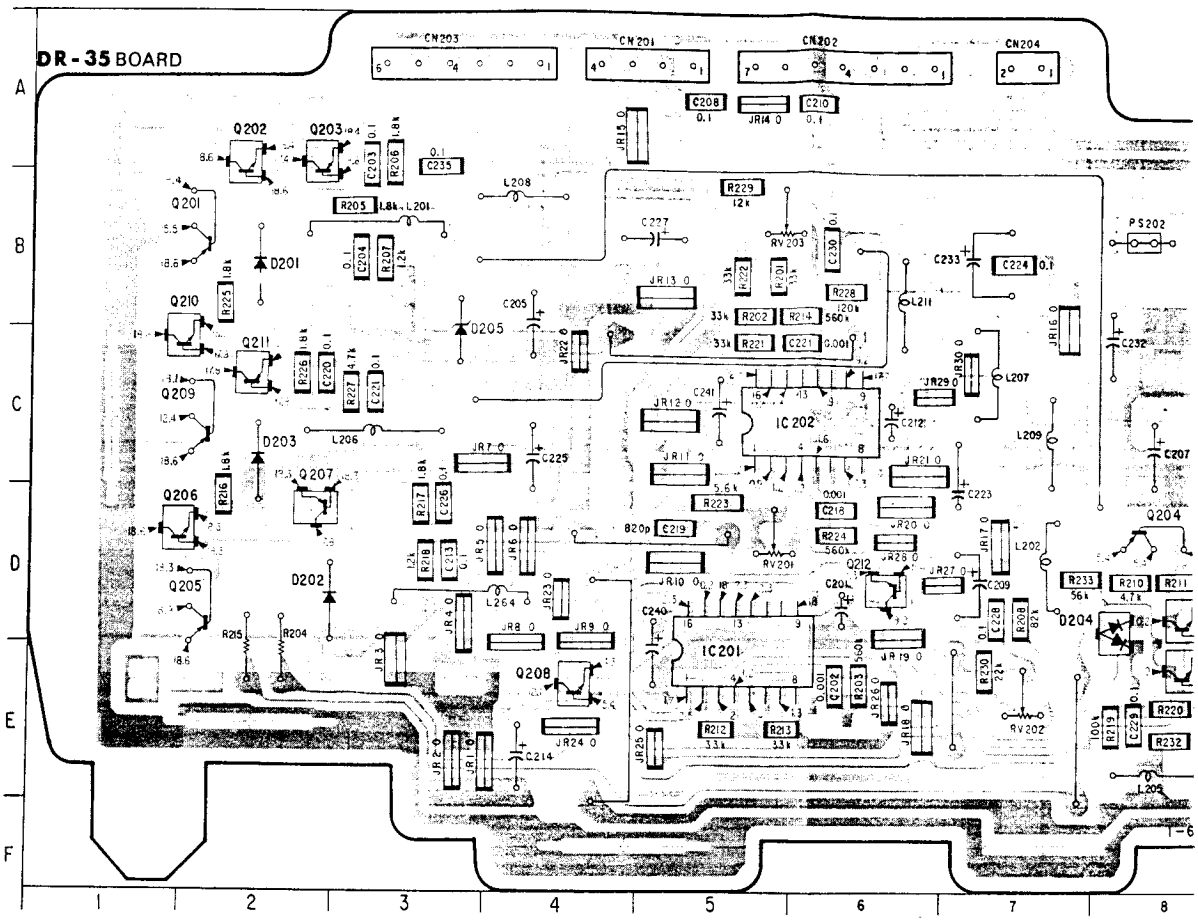




POWER POWER

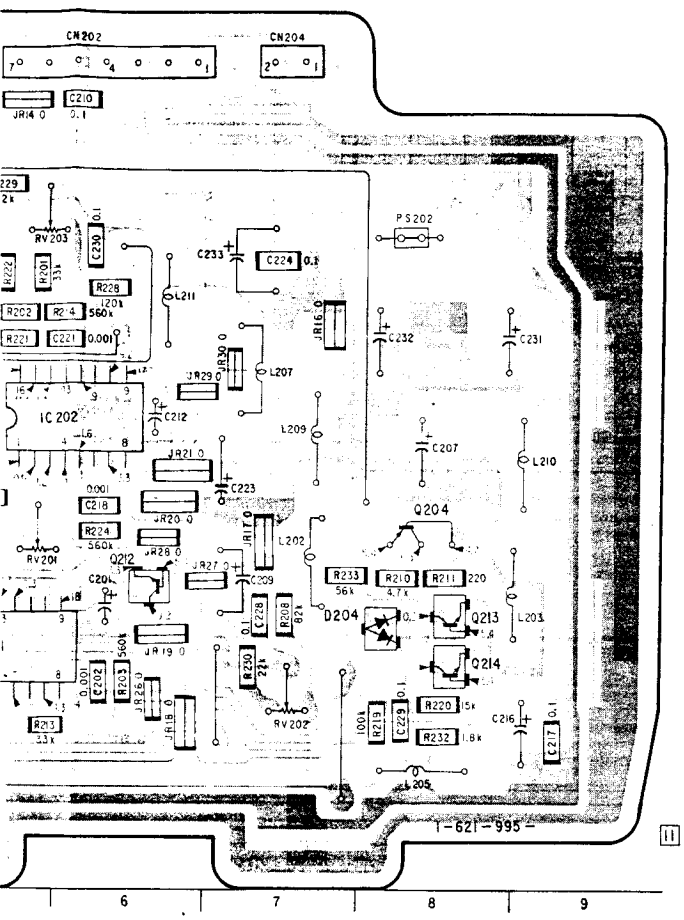


D103
D104
D106
D107
D108
D109
D110
D111
D112
D114
D115
D116
D117
D119

Q103
Q106
Q109

**DT-63BOARD**

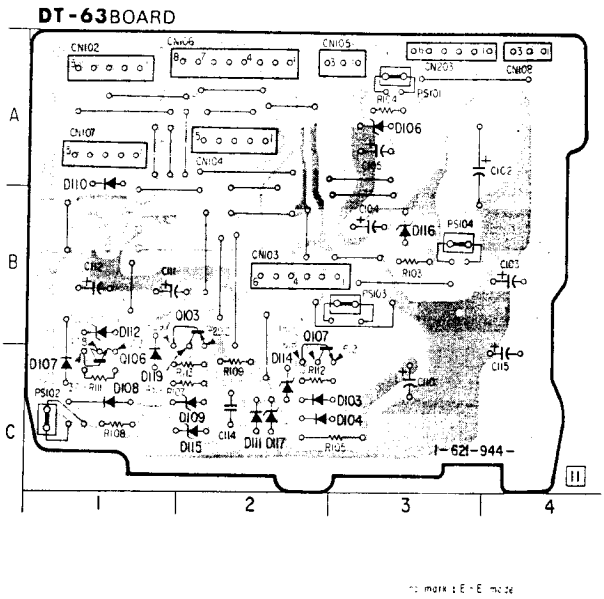

## DR-35(SWITCHING REGULATOR), DT-63(POWER SUPPLY), DL-15(REGULATOR), DO-1(R

—Ref. No. DR-35 BOARD, DT-63 BOARD, DL-15 BOARD, DO-1 BOARD, DS-16 BOARD : 13,000 series—

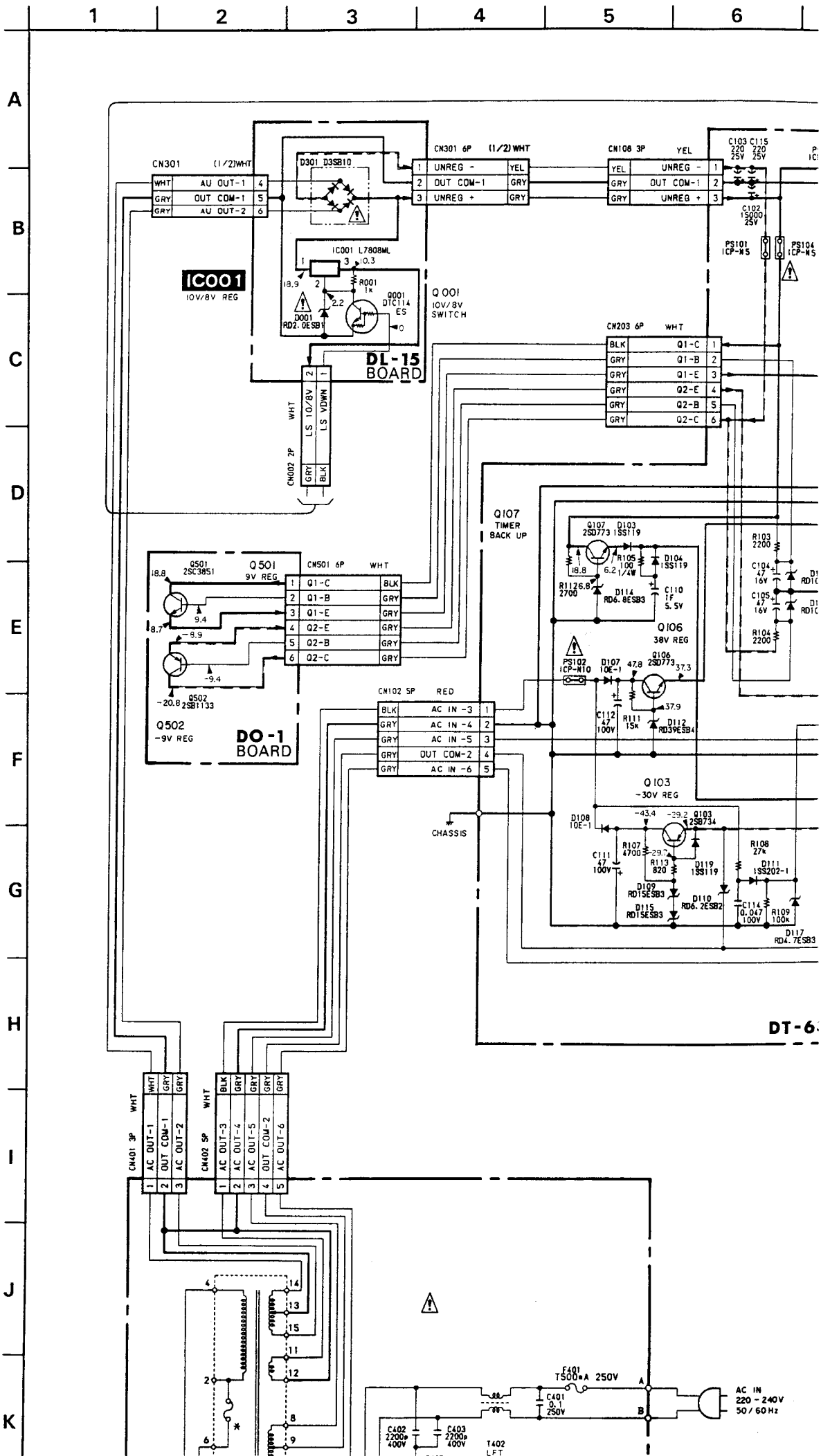

3 | 4 | 5 | 6 | 7 | 8 | 9 | 10 | 11

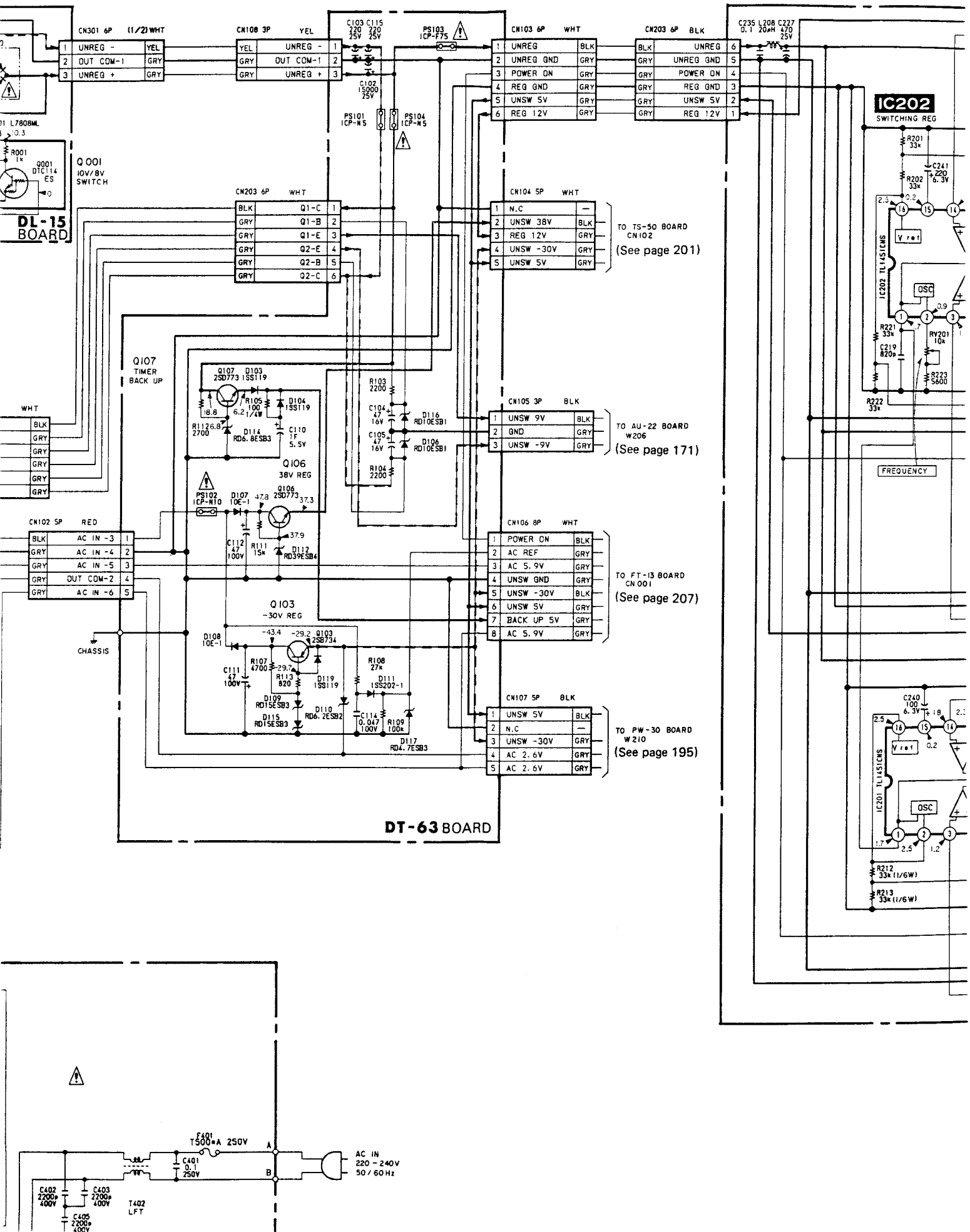

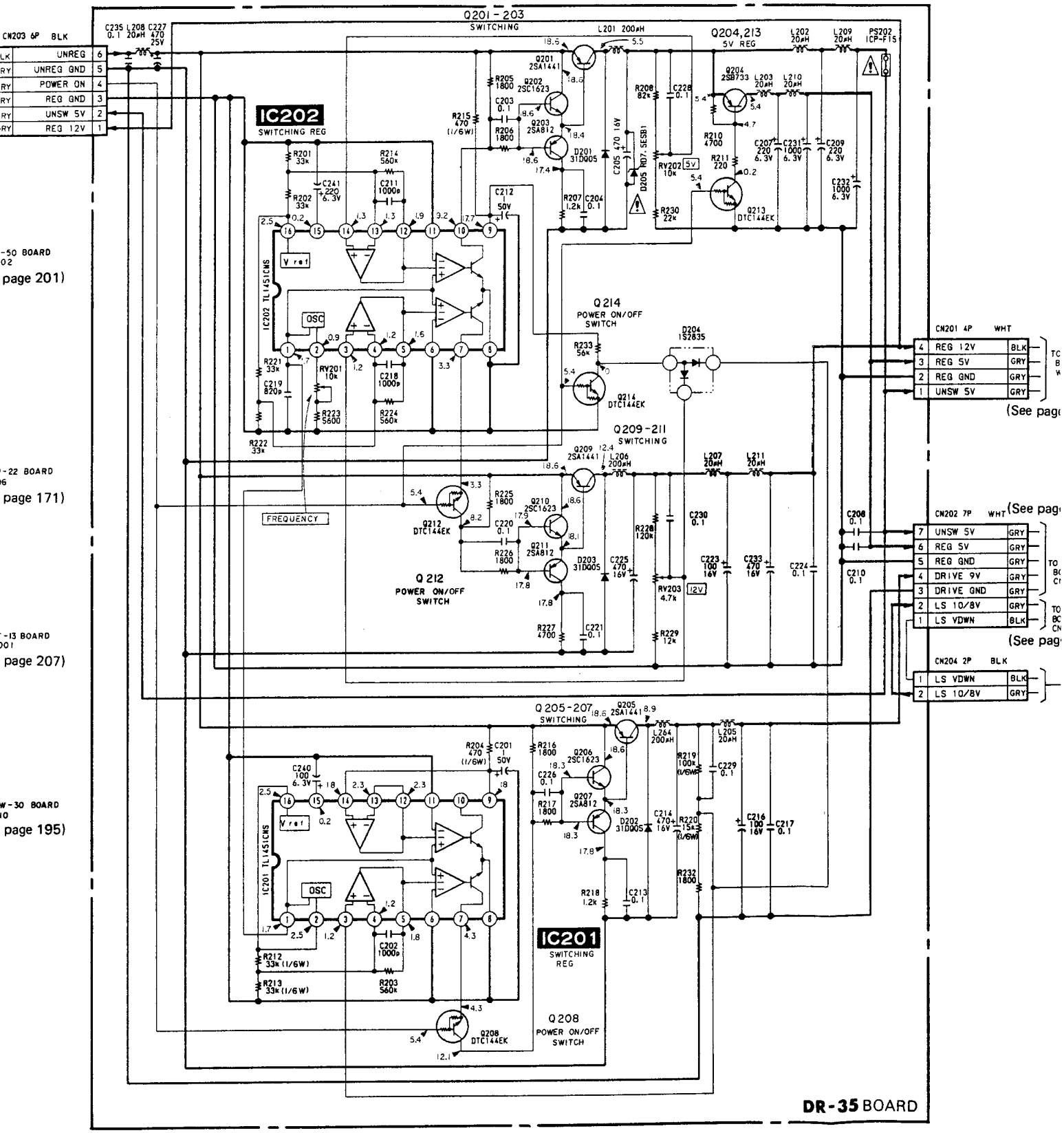


-50 BOARD
02
page 201)

-22 BOARD
06
page 171)

-13 BOARD
001
page 207)

W-30 BOARD
10
page 195)

no mark: E-E mode

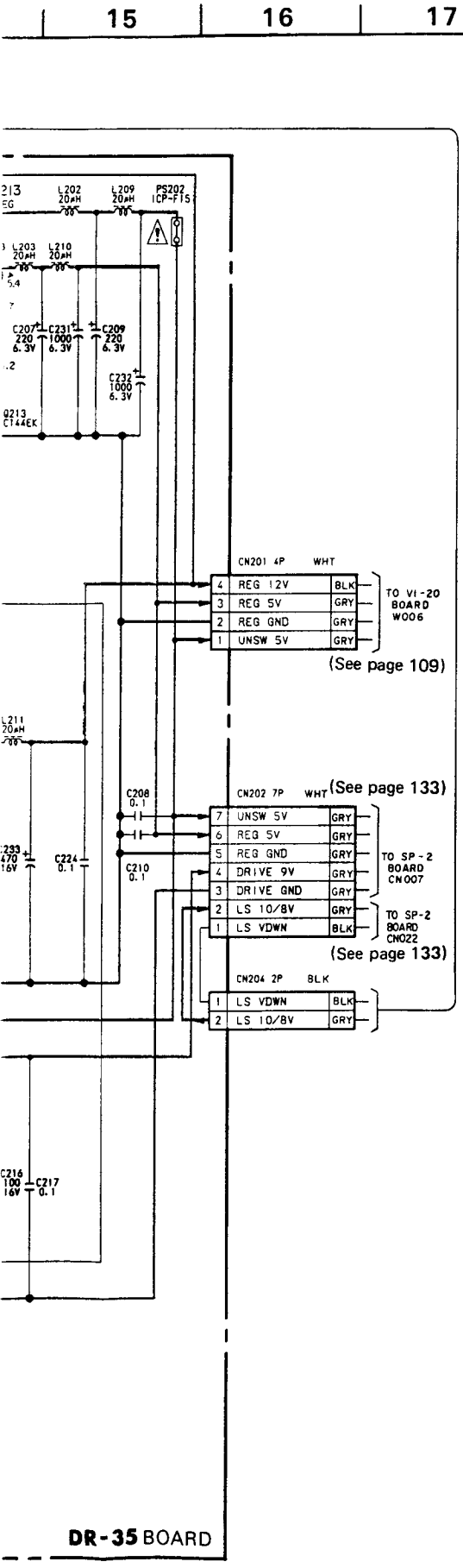


**Note:**

- Caution when replacing chip parts.
  New parts must be attached after removal of chip.
  Be careful not to heat the minus side of tantalum capacitor, because it is damaged by the heat.
- Resistors on the DR-35 board are in ohms 1/10W unless otherwise noted.
  Resistors on the DT-63 and DL-15 boards are in ohms 1/6W otherwise noted.
  kΩ: 1000Ω, MΩ: 1000kΩ.
- All capacitors are in μF unless otherwise noted. pF : μμF.
  50V or less are not indicated except for electrolytice. and tantalums.
- All variable and adjustable resistors have characteristic curve B, unless otherwise noted.
- ▭ : adjustment for repair.
- ——— : B + bus.
- – – – : B – bus.
- Voltages are dc with respect to ground unless otherwise noted.
- Readings are taken with a colour-bar signal input.
- Readings are taken with a digital multimeter (DC10MΩ).
- Voltage variations may be noted due to normal production tolerances.

When indicating parts by reference number, please include the board name.

**Note: The components identified by shading and mark ⚠ are critical for safety. Replace only with part number specified.**

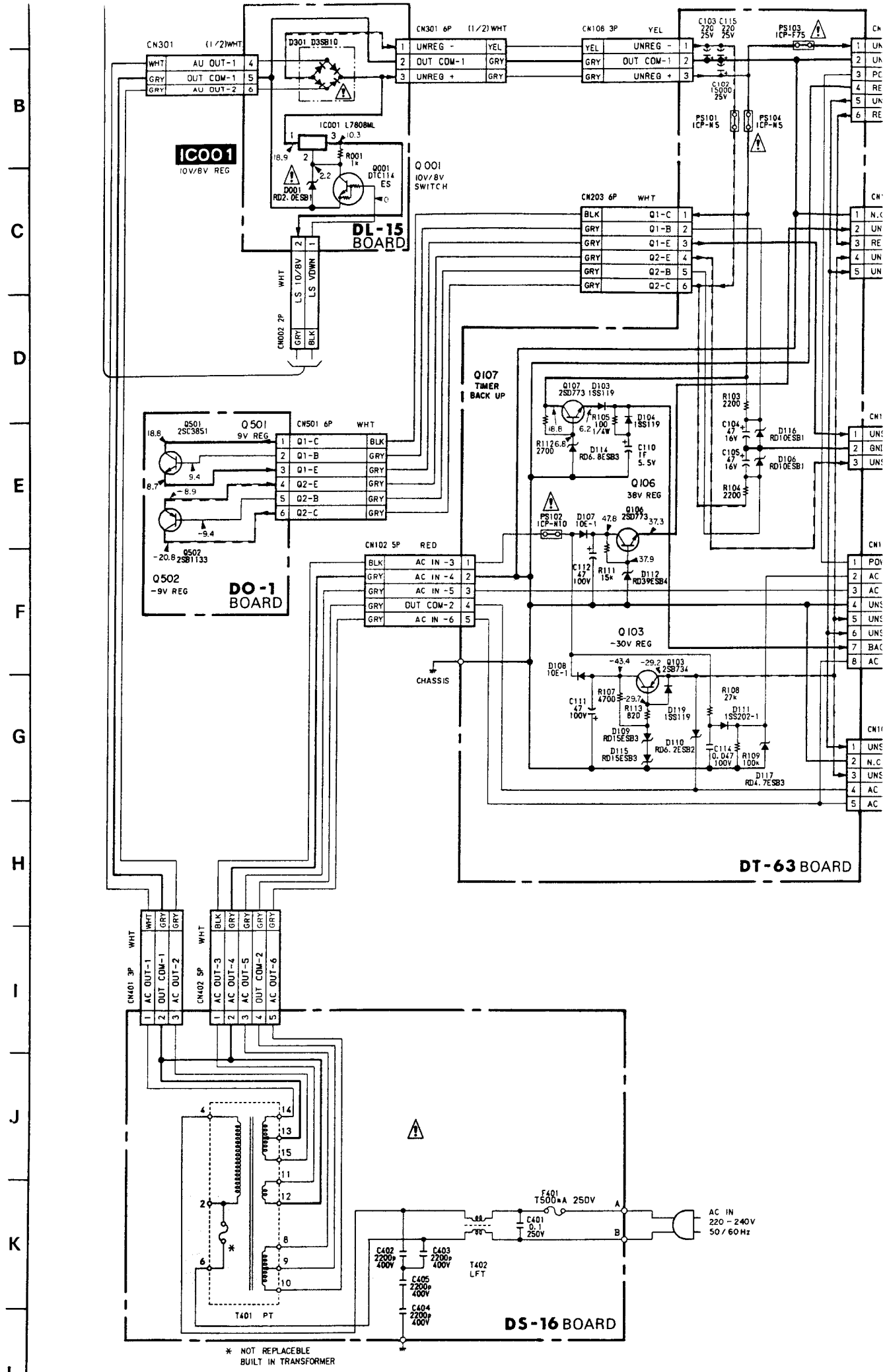
DL-15 BOARD
IC001 10V/8V REG
Q001 10V/8V SWITCH
DO-1 BOARD
Q501 9V REG
Q502 -9V REG
DT-63 BOARD
Q107 TIMER BACK UP
Q106 38V REG
Q103 -30V REG
CHASSIS
DS-16 BOARD
T401 PT
T402 LFT
F401 T500mA 250V
AC IN 220 - 240V 50/60Hz
* NOT REPLACEBLE BUILT IN TRANSFORMER

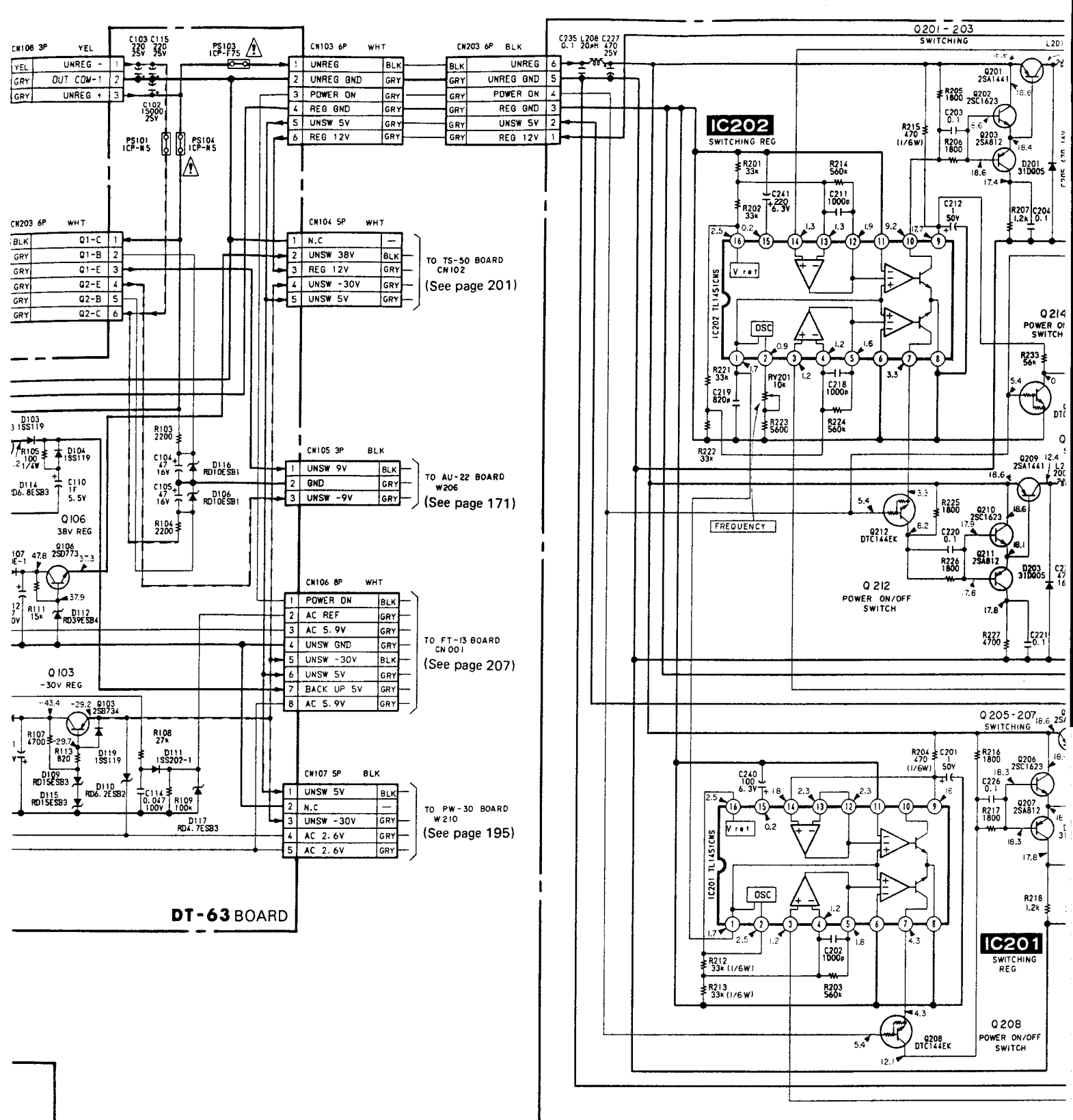


DT-63 BOARD



POWER POWER

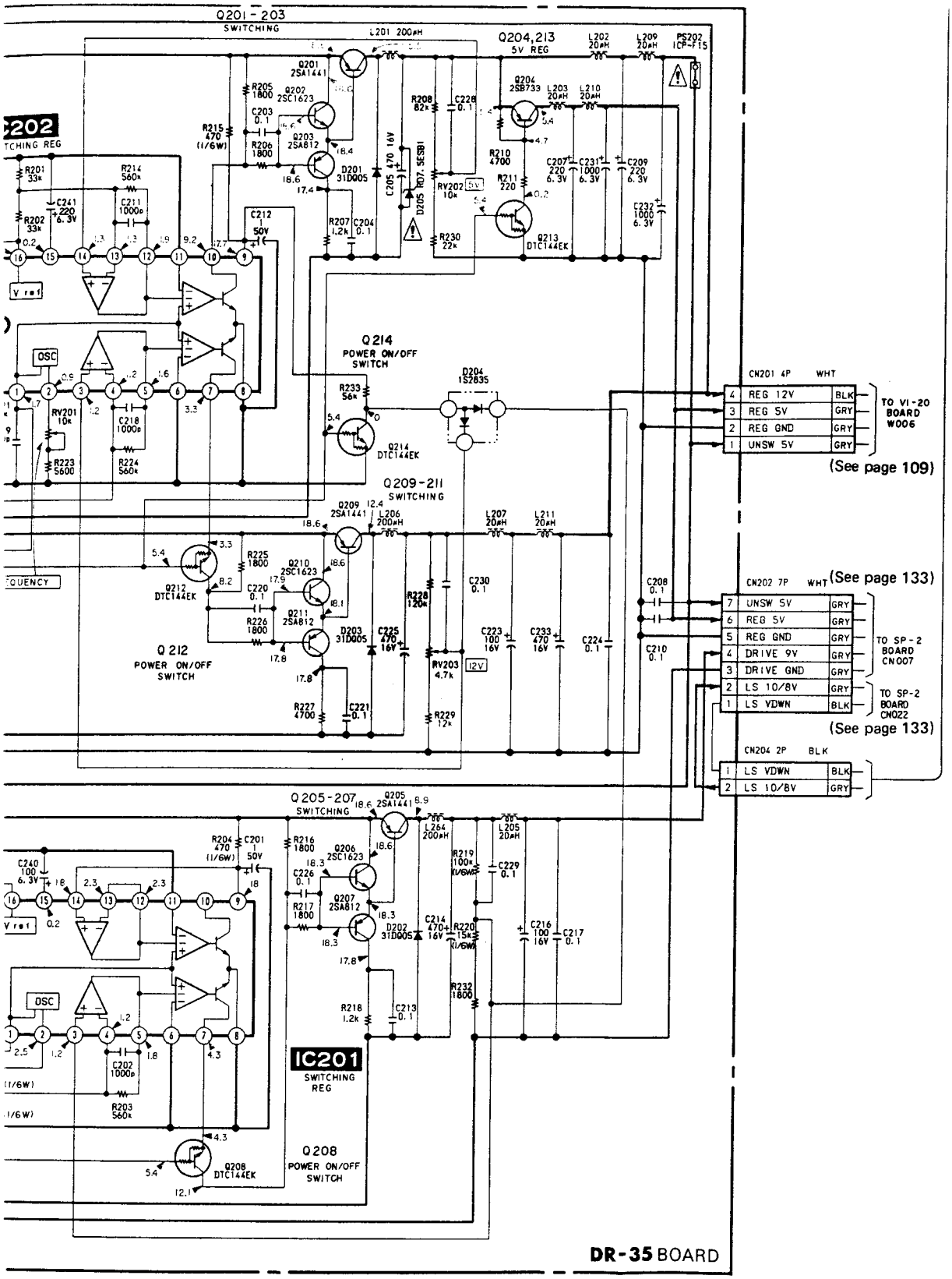
Q201 - 203
SWITCHING
L201 200µH
Q204,213
5V REG
L202 20µH
L209 20µH
PS202 ICP-F15
Q201 2SA1441
Q202 2SC1623
Q203 2SA812
D201 31D005
R205 1800
R206 1800
R207 1.2k
R208 82k
R210 4700
R211 220
R230 22k
RV202 10k
5V
D205 RD7.5ESB1
C205 470 16V
C204 0.1
C212 50V
C226 0.1
C207 220 6.3V
C231 1000 6.3V
C209 220 6.3V
C232 1000 6.3V
Q204 2SB733
L203 20µH
L210 20µH
Q213 DTC144EK
R201 33k
R202 33k
R214 560k
C241 220 6.3V
C211 1000p
R215 470 (1/6W)
C203 0.1
R223 560k
R224 560k
RV201 10k
C218 1000p
C202 1000p
R203 560k
OSC
V ref
Q214
POWER ON/OFF SWITCH
R233 56k
D204 1S2835
Q214 DTC144EK
Q209-211
SWITCHING
Q209 2SA1441
L206 200µH
L207 20µH
L211 20µH
Q210 2SC1623
Q211 2SA812
D203 31D005
R225 1800
R226 1800
R227 4700
R228 120k
C220 0.1
C221 0.1
C225 470 16V
C230 0.1
C223 100 16V
C233 470 16V
C224 0.1
RV203 4.7k
12V
R229 12k
Q212 DTC144EK
Q212
POWER ON/OFF SWITCH
C208 0.1
C210 0.1
CN201 4P WHT
4 REG 12V BLK
3 REG 5V GRY
2 REG GND GRY
1 UNSW 5V GRY
TO VI-20 BOARD W006
(See page 109)
CN202 7P WHT
(See page 133)
7 UNSW 5V GRY
6 REG 5V GRY
5 REG GND GRY
4 DRIVE 9V GRY
3 DRIVE GND GRY
2 LS 10/8V GRY
1 LS VDWN BLK
TO SP-2 BOARD CN007
TO SP-2 BOARD CN022
(See page 133)
CN204 2P BLK
1 LS VDWN BLK
2 LS 10/8V GRY
Q205 - 207
SWITCHING
Q205 2SA1441
L204 200µH
L205 20µH
Q206 2SC1623
Q207 2SA812
D202 31D005
R216 1800
R217 1800
R218 1.2k
R219 100k (1/6W)
R220 15k (1/6W)
R232 1800
C213 0.1
C214 470 16V
C216 100 16V
C217 0.1
C229 0.1
C240 100 6.3V
C201 1 50V
R204 470 (1/6W)
IC201
SWITCHING REG
Q208
POWER ON/OFF SWITCH
Q208 DTC144EK
DR-35 BOARD
no mark: E-E mode

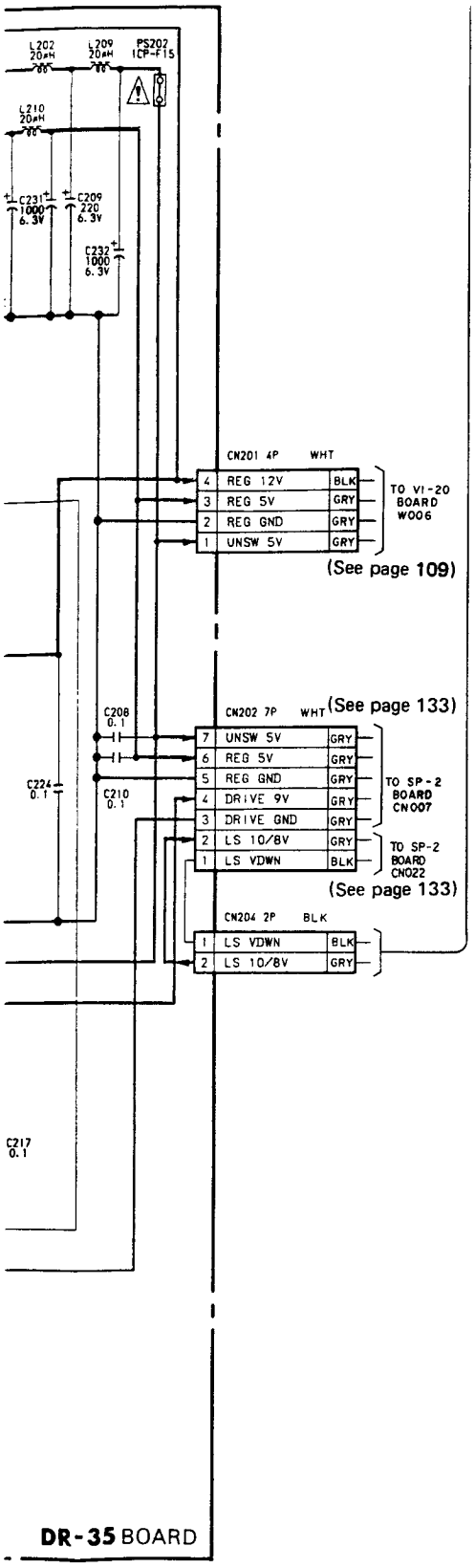


○ mark: E-E mode

- Resistors on the DR-35 board are in ohms 1/10W unless otherwise noted.
  Resistors on the DT-63 and DL-15 boards are in ohms 1/6W otherwise noted.
  kΩ: 1000Ω, MΩ: 1000kΩ.
- All capacitors are in μF unless otherwise noted. pF : μμF.
  50V or less are not indicated except for electrolytice. and tantalums.
- All variable and adjustable resistors have characteristic curve B, unless otherwise noted.
- ▭ : adjustment for repair.
- ——— : B + bus.
- – – – : B – bus.
- Voltages are dc with respect to ground unless otherwise noted.
- Readings are taken with a colour-bar signal input.
- Readings are taken with a digital multimeter (DC10MΩ).
- Voltage variations may be noted due to normal production tolerances.

When indicating parts by reference number, please include the board name.

**Note: The components identified by shading and mark ⚠ are critical for safety. Replace only with part number specified.**

## 4-3. SEMICONDUCTORS

BA3707
NJM4560S

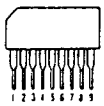

BA6303F
BU4053BF
CX20115A
CX22021
HD14052BFP
LA5005M
MB84053BPF
TC4052BF
TC4053BF
TC4538BF
TL1451CNS
μPD4052BG
μPD4053BG

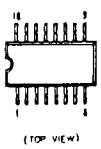


BA6800AF
CXD1077M
CXD1078M
CX20035
CX20099
CX23012
MB8464-12LPF
MB8464-15LPF
M51955BL

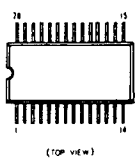


BA7036LS

BU4051B
BU4052B
BU4053B
CXA1042M
CX23078
HD14051BP
HD14052BP
HD14053BFP
HD14053BP
HD14538BP
MB84051B
MB84052B
MB84053B
MB88306P
MC14538BCP
MSM6411B-19RS
TC40103BP
TC4051BP
TC4051BP-HB
TC4052BP
TC4052BP-HP
TC4053BP
TC4053BP-HP
TC4538BP
μPD4051BC
μPD4052BC
μPD4053BC

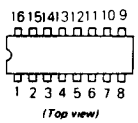


BX1387

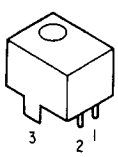


CXD1066Q
CX20034
CX23011
MB64H428PF

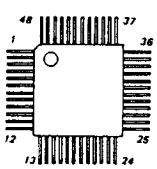

CXP5016-191Q
CXP5048H-069Q
CXP5048H-070Q
MB674101PF
μPD75104G-519-B1
μPD75106G-518-1B
μPD75208G-521-1B

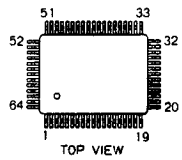


CX20032
SAA5235
μPD4364G-15L

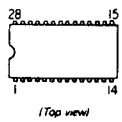


CX20061

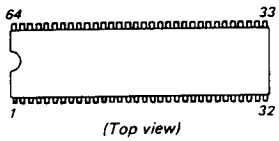


CX20102

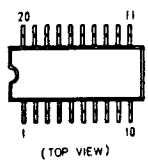


CX20103
HD14066BFP
HD14070BFP
NJM3403AM
TC40H000F
TC40H004F
TC4011BF
TC4030BF
TC4030BF-HB
TC4066BF
μPC324G2
μPD4066BG

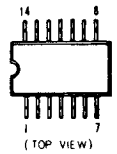


CX20114
μPD7566G-505

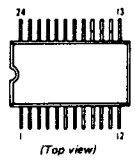


CX20130
CX20131
CX20137

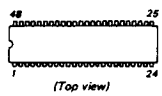


CX20147
TDA3592A
μPD7566G-506

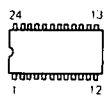


CX23064

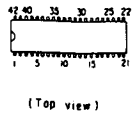


IR3N05
MB3763P
NJM3414D
NJM4558D
μPC4558C

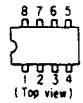


LB1616M

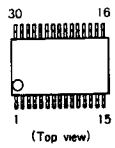


LB1640N

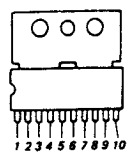

L7808ML

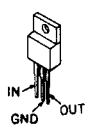

CXP5016-191Q
CXP5048H-069Q
CXP5048H-070Q
MB674101PF
μPD75104G-519-B1
μPD75106G-518-1B
μPD75208G-521-1B

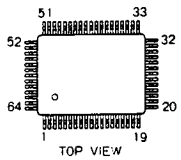


CX20032
SAA5235
μPD4364G-15L

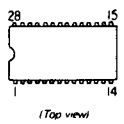


CX20061

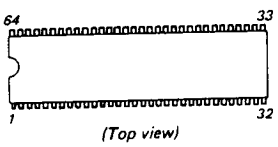


CX20102

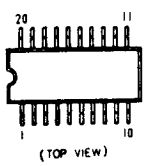


CX20103
HD14066BFP
HD14070BFP
NJM3403AM
TC40H000F
TC40H004F
TC4011BF
TC4030BF
TC4030BF-HB
TC4066BF
μPC324G2
μPD4066BG

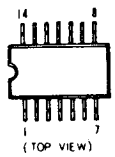


CX20114
μPD7566G-505

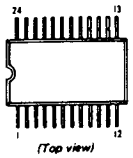


CX20130
CX20131
CX20137

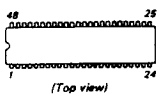


CX20147
TDA3592A
μPD7566G-506

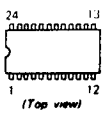


CX23064

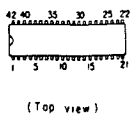


IR3N05
MB3763P
NJM3414D
NJM4558D
μPC4558C

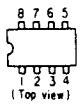


LB1616M

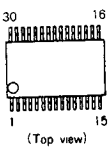


LB1640N

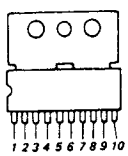


L7808ML

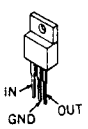


MB3763PF
NJM4560M
μPC358G2
μPC393G2
μPC4570G2

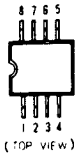


M50434-019SP

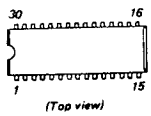


M54572L

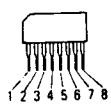


M58655P
SAF1135P
TDA4944

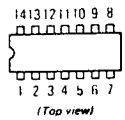


TDA2594
TDA2595

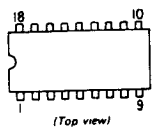


TDA4940

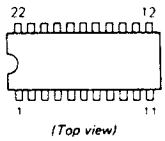


TL431CLP
TL431CLPB

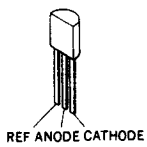


μPC574J

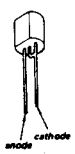


μPD7508HC-090

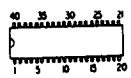

**MB3763PF**
**NJM4560M**
**μPC358G2**
**μPC393G2**
**μPC4570G2**

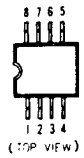


**M50434-019SP**

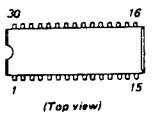


**M54572L**

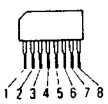


**M58655P**
**SAF1135P**
**TDA4944**

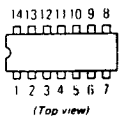


**TDA2594**
**TDA2595**

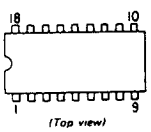


**TDA4940**

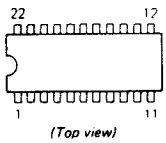


**TL431CLP**
**TL431CLPB**

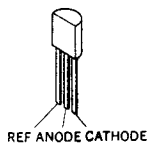


**μPC574J**

**μPD7508HC-090**

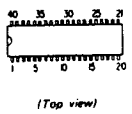


**DTA114EK**
**DTA124EK**
**DTA144EK**
**DTC144EK**
**2SA1037K**
**2SA1122C**
**2SA1162**
**2SA1179**
**2SA812**
**2SB624**
**2SC1623**
**2SC2412K**
**2SC2712**
**2SC2812L5**
**2SC2812L6**
**2SC2812L7**
**2SC3052**
**2SC3326N**

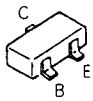


**DTC114ES**
**DTC143TS**

**FMS1FE**
**FMW2**

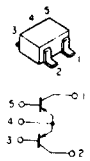


**PT360FS**

**2SA1175**
**2SC2785**

**2SA1441**
**2SB1133-R**
**2SC3851**
**2SD1266-Q**
**2SD1406**
**2SD1585**
**2SD1666**

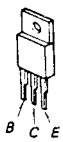


**2SB733**
**2SB734**
**2SD773**

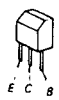


**2SB739**
**2SB740**
**2SD788**

**2SD1366A**
**2SD1664-Q**
**2SD999**

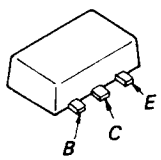


**2SK209-0**
**2SK209-Y**
**2SK433**
**2SK94-X2**

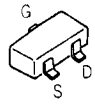


**DAN202K**
**1S2835**

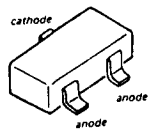


**DAP202K**
**1S2837**
**MA152WK**
**MA157**

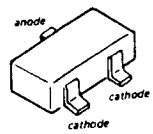


**DA204K**
**1SS123**
**MA151WK**

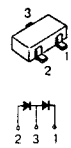


**D3SB10**

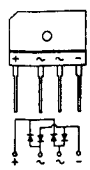

2SK209-0
2SK209-Y
2SK433
2SK94-X2

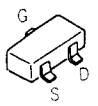


DAN202K
1S2835

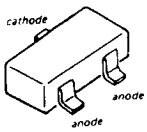


DAP202K
1S2837
MA152WK
MA157

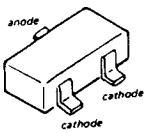


DA204K
1SS123
MA151WK

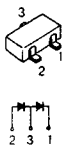


D3SB10

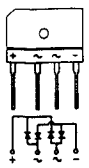

EQA11-09A

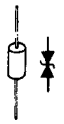

E10DS2

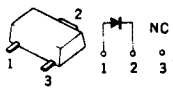


GL-450S

GP-2S09

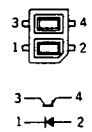


MA153

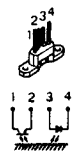


RD10ES-B1
RD15ES-B3
RD18ES-B1
RD2.0ES-B1
RD39JS-B
RD4.7ES-B3
RD6.2ES-B1
RD6.2ES-B2
RD6.2ES-B3
RD6.8ES-B2
RD6.8ES-B3
RD7.5ES-B1
1SS119
1SS133
1SS148
1SS202-1

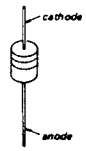


RD12M-B1
RD12M-B2
RD12M-B3
RD5.1M-B2
RD7.5M-B1
RD9.1M-B1
1SS193
1SS220

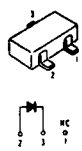


RD2.7ES-B1
RD2.7ES-B2
RD39ES-B4
1SS106
10E1
10E2

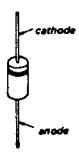


SEL2810A-C
TLG123A
TLR123
TLY123

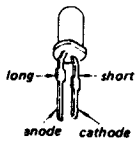


1SS187
1SS190
1SS223

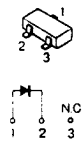


1SS196

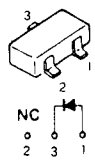


31DQ05

# SECTION 5
# EXPLODED VIEWS

NOTE:

- Itmes with no part number and no description are not stocked because they are seldom required for routine service.
- The construction parts of an assembled part are indicated with a collation number in the remark column.
- Items marked "*" are not stocked since they are seldom required for routine service. Some delay should be anticipated when ordering these items.
- The mechanical parts with no reference number in the exploded views are not supplied.

The components identified by shading and mark ⚠ are critical for safety. Replace only with part number specified.

## 5-1. FRONT PANEL AND CASE (UPPER, LOWER) ASSEMBLIES

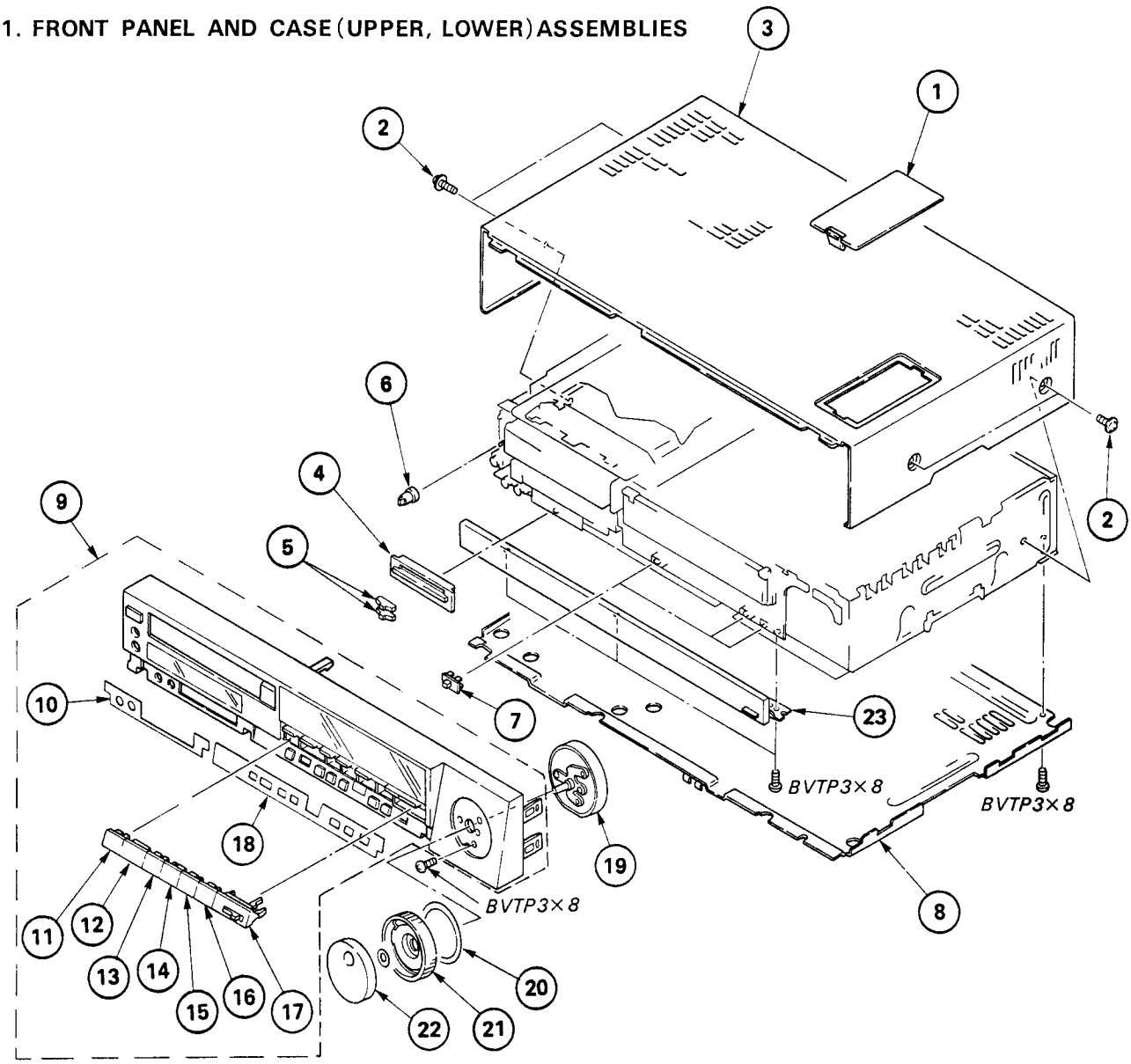


| No. | Part No. | Description | Remark |
|---|---|---|---|
| 1 | X-3711-957-1 | LID ASSY, PRESET | |
| 2 | 4-886-821-01 | SCREW, M3 CASE | |
| 3 | X-3711-979-1 | CASE ASSY, UPPER | |
| 4 | X-3711-980-1 | COVER ASSY, SLIDE | |
| 5 | 3-716-868-01 | KEY, SLIDE | |
| 6 | 3-716-867-01 | KNOB, HP | |
| 7 | 3-716-882-01 | KNOB, SLIDE | |
| 8 | *3-716-913-01 | PLATE, BOTTOM | |
| 9 | X-3711-983-1 | PANEL (A) ASSY, FRONT (WG MODEL) | 10-18 |
| | X-3711-984-1 | PANEL (UK) ASSY, FRONT (AEP MODEL) | 10-18 |
| 10 | *3-716-866-11 | PLATE (B), INDICATION, POCKET | |
| 11 | X-3711-953-1 | KEY ASSY, REW | |
| 12 | X-3711-951-1 | KEY ASSY, FWD | |
| 13 | X-3711-952-1 | KEY ASSY, FF | |
| 14 | 3-716-856-01 | KEY, STOP | |
| 15 | X-3711-954-1 | KEY ASSY, PAUSE | |
| 16 | X-3711-955-1 | KEY ASSY, X2 | |
| 17 | X-3711-981-1 | KEY ASSY, REC | |
| 18 | *3-716-865-21 | PLATE (A), INDICATION, POCKET (WG MODEL) | |
| | *3-716-865-31 | PLATE (A), INDICATION, POCKET (AEP MODEL) | |
| 19 | 1-464-784-11 | ENCODER, ROTARY | |
| 20 | 3-716-831-01 | SPACER | |
| 21 | 3-711-962-01 | DIAL, SHUTTLE | |
| 22 | X-3711-914-1 | DIAL ASSY, JOG | |
| 23 | 1-464-785-31 | SWITCH BLOCK, CONTROL (WG MODEL) | |
| | 1-464-785-41 | SWICH BLOCK, CONTROL (AEP MODEL) | |

## 5-2. BOARD AND POWER BLOCK ASSEMBLIES

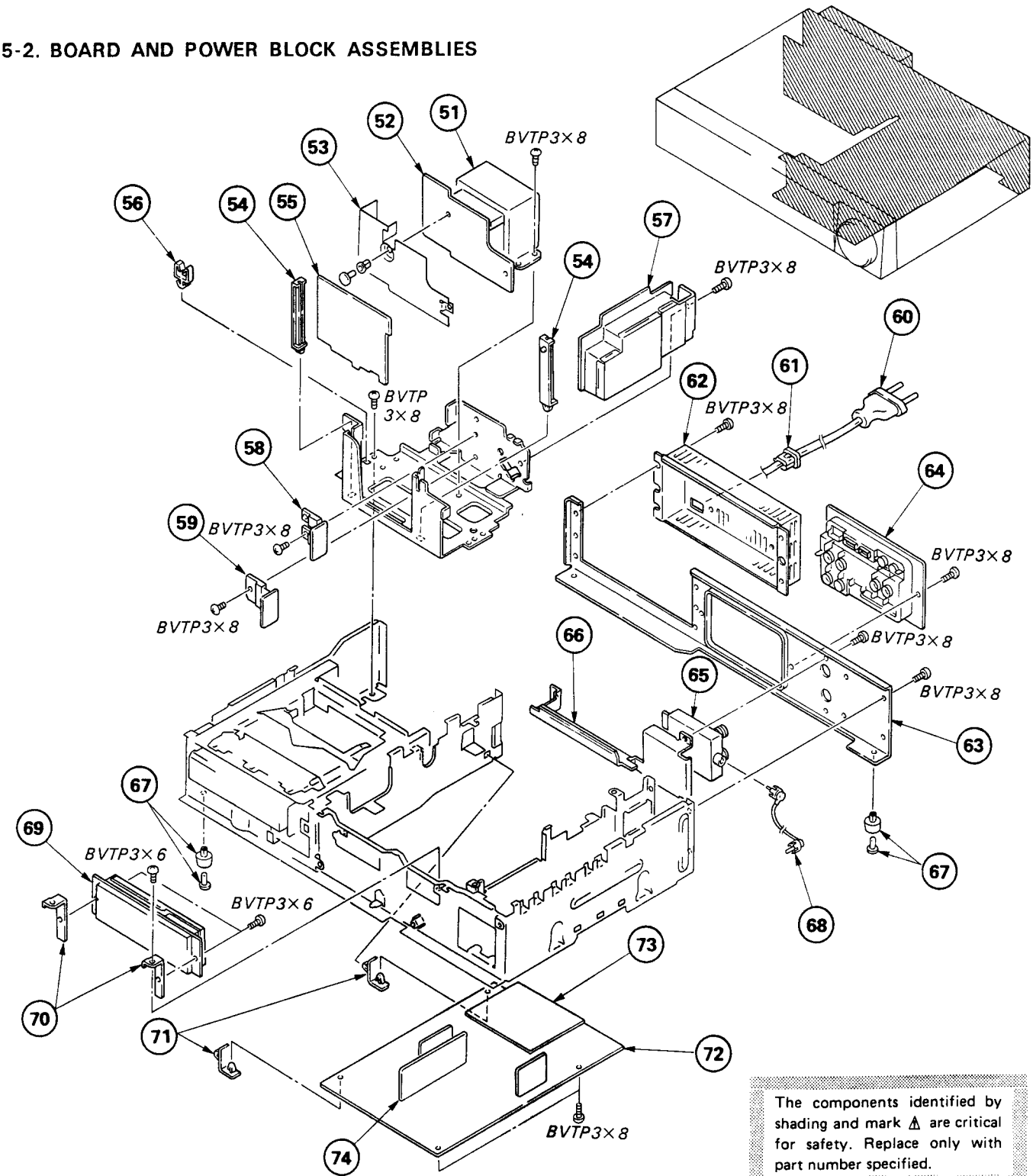


The components identified by shading and mark ⚠ are critical for safety. Replace only with part number specified.

| No. | Part No. | Description | Remark |
|---|---|---|---|
| 51 | ⚠1-448-836-11 | TRANSFORMER, POWER | |
| 52 | *1-622-006-11 | DS-16 (C) BOARD | |
| 53 | 3-716-892-11 | SHEET (LARGE), INSULATING | |
| 54 | 3-680-719-11 | GUIDE, CHASSIS | |
| 55 | *A-7070-325-A | DT-63 (C) BOARD, COMPLETE | |
| 56 | *4-309-753-00 | HOLDER, WIRE | |
| 57 | *A-7060-585-A | DR-35 (B) BOARD, COMPLETE | |
| 58 | *1-621-992-11 | DO-1 BOARD | |
| 59 | *1-621-993-11 | DL-15 BOARD | |
| 60 | ⚠1-534-817-XX | CORD, POWER | |
| 61 | ⚠ 3-703-244-00 | BUSHING (2104), CORD | |
| 62 | 3-713-667-01 | COVER (A), POWER (WG MODEL) | |
| | 3-713-667-21 | COVER (A), POWER (AEP MODEL) | |
| 63 | 3-713-669-01 | FRAME (A), REAR | |
| 64 | 3-713-668-01 | PLATE (A), ORNAMENTAL, JACK | |
| 65 | ⚠1-464-690-11 | MODULATOR, RF (RFU-857) | |
| 66 | *3-713-665-01 | BAND (A), RF MODULATOR | |
| 67 | 3-697-937-01 | LEG | |
| 68 | *1-555-110-00 | CABLE, PIN | |
| 69 | *A-7060-475-A | VP-1 (A) BOARD, COMPLETE (WG MODEL) | |
| 70 | *3-713-660-01 | HOLDER, VPS (WG MODEL) | |
| 71 | *3-701-832-00 | HINGE, CIRCUIT BOARD | |
| 72 | *A-7060-469-A | VI-20 (A) BOARD, COMPLETE (WG MODEL) | 74 |
| | *A-7060-792-A | VI-20 (B) BOARD, COMPLETE (AEP MODEL) | 74 |
| 73 | *A-7068-031-A | TC-3 BOARD, COMPLETE (WG MODEL) | |
| 74 | *A-7068-030-A | CH-44 (B) BOARD, COMPLETE | |

## 5-3. BOARD ASSEMBLY

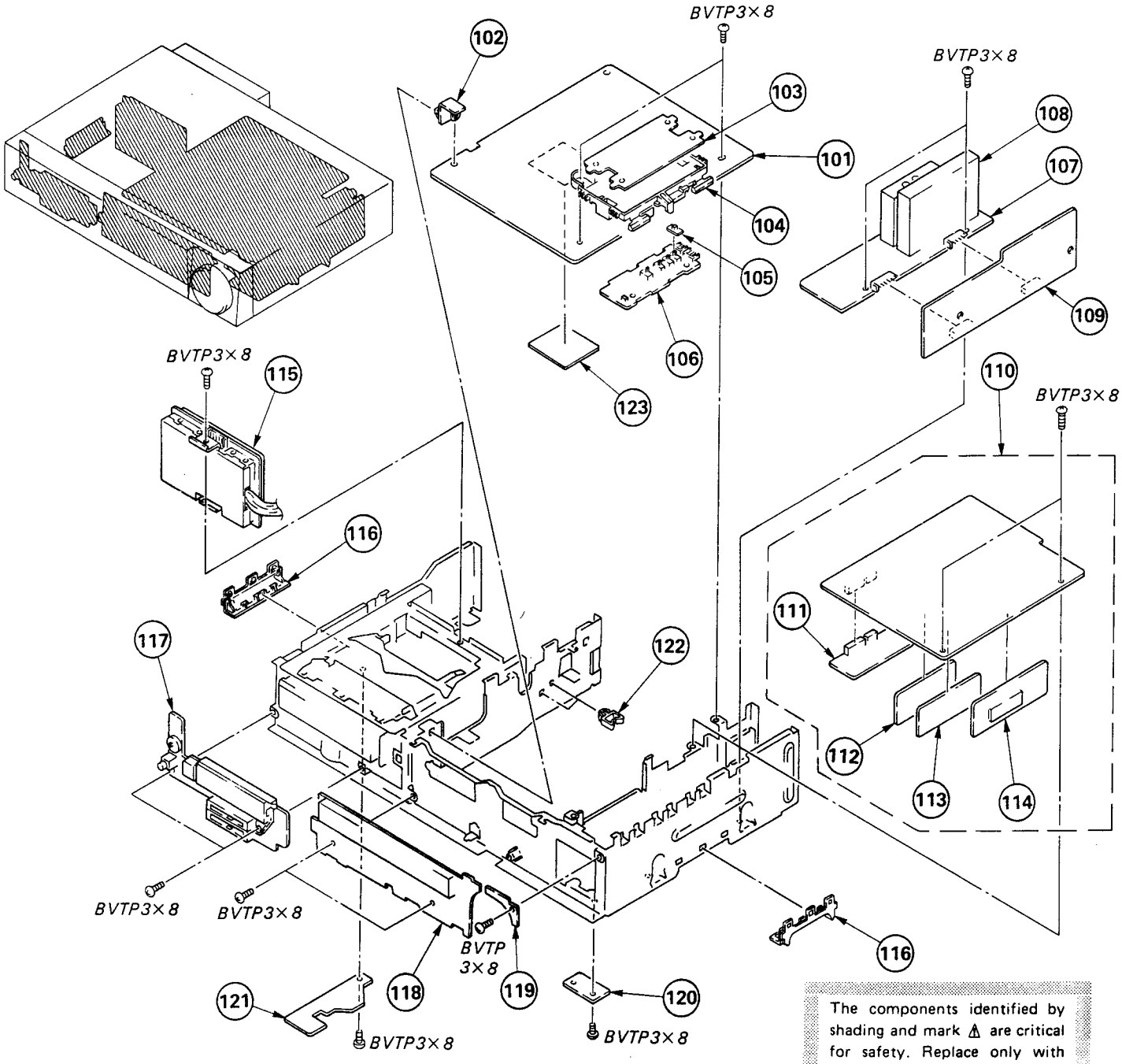


The components identified by shading and mark ⚠ are critical for safety. Replace only with part number specified.

| No. | Part No. | Description | Remark |
|---|---|---|---|
| 101 | *A-7060-467-A | SP-2 (B) BOARD, COMPLETE | 123 |
| 102 | *3-701-832-00 | HINGE, CIRCUIT BOARD | |
| 103 | 3-716-841-21 | SHEET, PRESET (WG MODEL) | |
| | 3-716-841-41 | SHEET, PRESET (AEP MODEL) | |
| 104 | 3-716-896-01 | PRESET (MAIN) (WG MODEL) | |
| | 3-716-896-31 | PRESET (MAIN) (AEP MODEL) | |
| 105 | 3-713-694-01 | KNOB (P), SLID | |
| 106 | *A-7060-474-A | PR-13 (A) BOARD, COMPLETE (WG MODEL) | |
| | *A-7060-609-A | PR-13 (B) BOARD, COMPLETE (AEP MODEL) | |
| 107 | *A-7060-471-A | TU-83 (A) BOARD, COMPLETE (WG MODEL) | |
| | *A-7060-607-A | TU-83 (B) BOARD, COMPLETE (AEP MODEL) | |
| 108 | 1-463-761-11 | TUNER, ET (DT-883B) | |
| 109 | ⚠*A-7060-482-A | TS-50 (A) BOARD, COMPLETE (WG MODEL) | |
| | ⚠*A-7060-608-A | TS-50 (B) BOARD, COMPLETE (AEP MODEL) | |
| 110 | *A-7060-468-A | AU-22 (B) BOARD, COMPLETE | 111-114 |

| No. | Part No. | Description | Remark |
|---|---|---|---|
| 111 | *A-7068-022-A | AD-12 (A) BOARD, COMPLETE | |
| 112 | *A-7068-025-A | NR-6 (A) BOARD, COMPLETE | |
| 113 | *A-7068-032-A | MK-2 (B) BOARD, COMPLETE | |
| 114 | *A-7068-021-A | AF-20 (A) BOARD, COMPLETE | |
| 115 | *A-7060-466-A | RP-36 (B) BOARD, COMPLETE | |
| 116 | 3-716-907-01 | PROTECTOR, FRAME | |
| 117 | *A-7060-407-A | PW-30 (A) BOARD, COMPLETE | |
| 118 | *A-7060-470-A | FT-13 (C) BOARD, COMPLETE (WG MODEL) | |
| | *A-7060-793-A | FT-13 (D) BOARD, COMPLETE (AEP MODEL) | |
| 119 | *1-621-985-11 | FR-24 (A) BOARD | |
| 120 | *1-621-987-11 | CB-8 (A) BOARD | |
| 121 | *1-621-982-11 | MJ-11 (A) BOARD | |
| 122 | *4-309-753-00 | HOLDER, WIRE | |
| 123 | *1-622-469-11 | RB-2B BOARD | |

## 5-4. CASSETTE COMPARTMENT ASSEMBLY

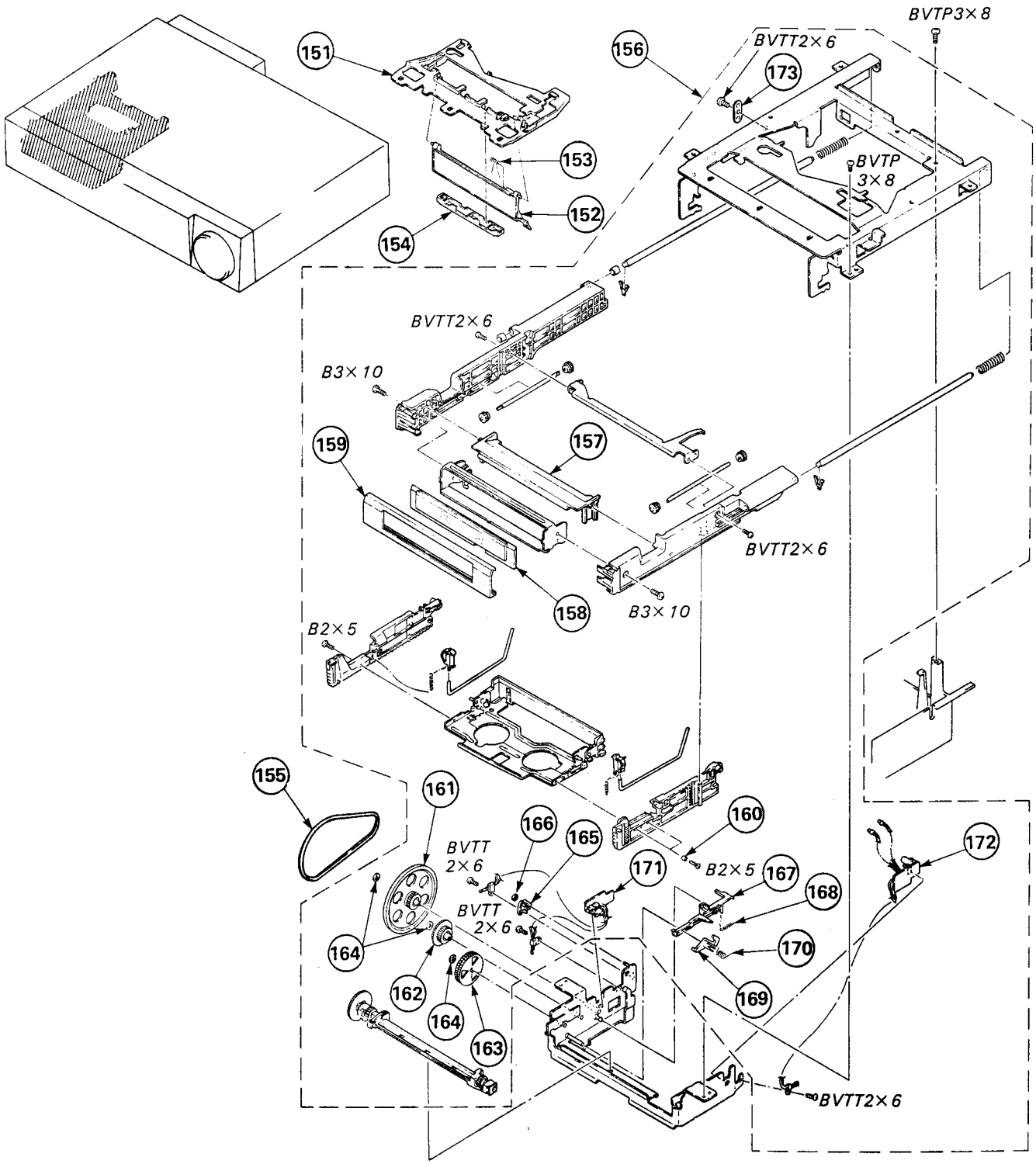


| No. | Part No. | Description | Remark |
|---|---|---|---|
| 151 | 3-716-908-01 | CLAMP, LAMP | |
| 152 | X-3711-965-1 | MIRROR ASSY | |
| 153 | 3-713-686-01 | SPRING | |
| 154 | 3-716-884-01 | HOLDER, LAMP | |
| 155 | 3-713-670-01 | BELT, LS | |
| 156 | *A-7090-443-A | COMPARTMENT ASSY, CASSETTE, LS | 157-173 |
| 157 | 3-716-885-01 | PLATE, SLOPE | |
| 158 | 3-713-684-01 | GLASS, WINDOW | |
| 159 | 3-713-682-01 | HEAD, FRONT | |
| 160 | *3-657-841-01 | SPACER (2X2) | |
| 161 | 3-716-849-01 | PULLEY, MIDWAY | |
| 162 | 3-716-819-01 | GEAR, DECELERATION | |
| 163 | X-3711-968-1 | GEAR ASSY, LIMITER | |
| 164 | 3-669-596-00 | WASHER (2.3), STOPPER | |
| 165 | 3-716-821-01 | ARM, SW | |
| 166 | 3-669-465-00 | WASHER (1.5), STOPPER | |
| 167 | 3-716-937-01 | SLIDER, LOCK | |
| 168 | 3-716-825-01 | SPRING, TENSION | |
| 169 | 3-716-850-01 | HOLDER, LOCK | |
| 170 | 3-713-687-01 | SPRING | |
| 171 | *1-621-998-11 | TE-6 BOARD | |
| 172 | *1-621-997-11 | TE-5 BOARD | |
| 173 | *3-716-944-01 | STOPPER PLATE, SHAFT | |

## 5-5. CHASSIS ASSEMBLY 1

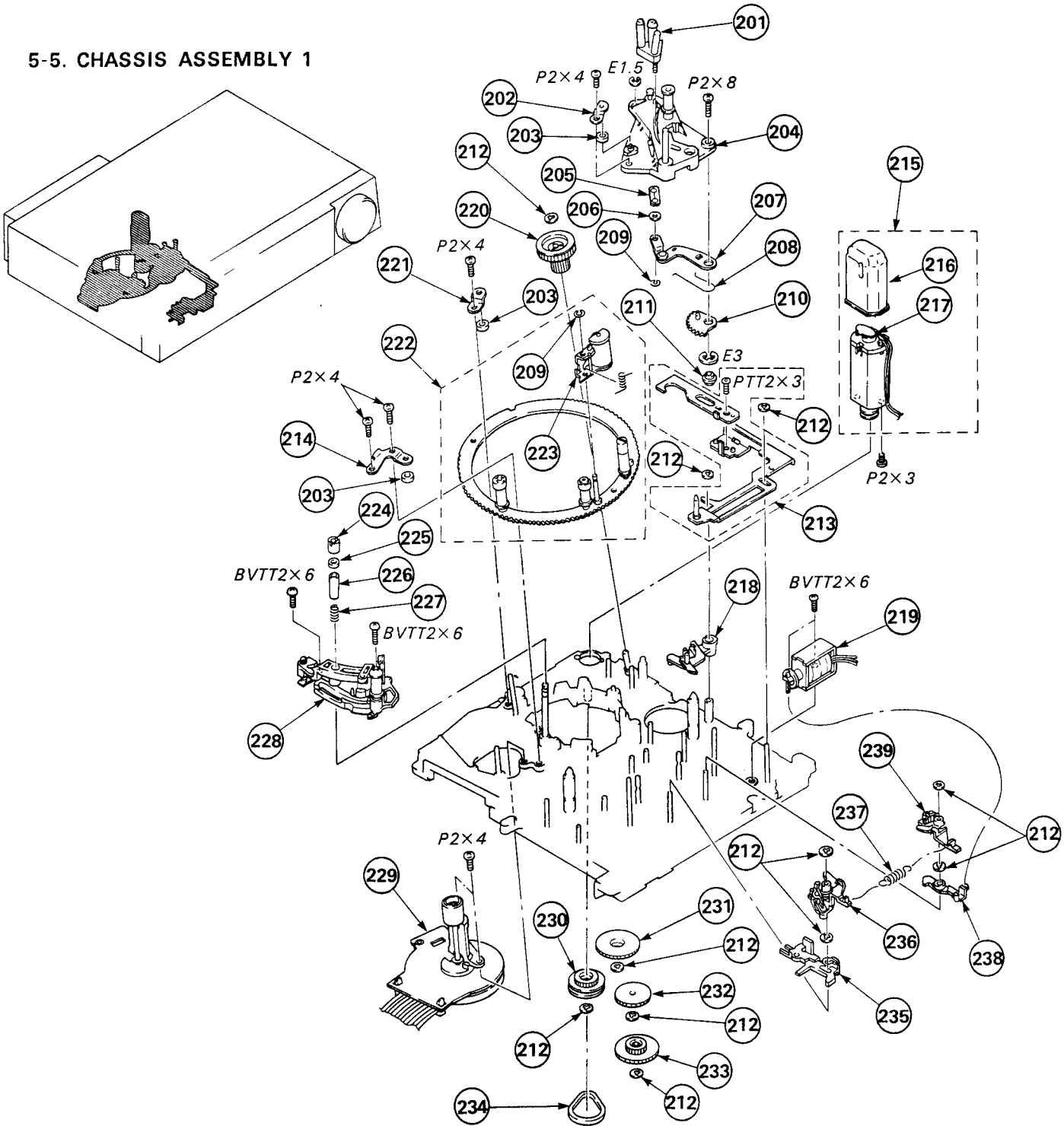


| No. | Part No. | Description | Remark |
|---|---|---|---|
| 201 | X-3686-502-1 | BASE ASSY, GUIDE | |
| 202 | *3-686-503-01 | RETAINER, ROLLER | |
| 203 | 3-697-538-01 | ROLLER, RING | |
| 204 | X-3686-577-1 | CHASSIS ASSY, GUIDE, SLANT | |
| 205 | 3-686-663-01 | WASHER, STOPPER, 2 GANG | |
| 206 | 3-701-436-21 | WASHER, POLYEHTHYLENE | |
| 207 | X-3686-537-1 | ARM ASSY | |
| 208 | 3-686-701-01 | SPRING | |
| 209 | 3-315-384-31 | WASHER, STOPPER | |
| 210 | 3-699-509-01 | GEAR, SECTOR | |
| 211 | 3-686-537-01 | RETAINER, LOCK SLODER | |
| 212 | 3-669-465-00 | WASHER (1.5), STOPPER | |
| 213 | A-7040-103-A | SLIDER ASSY, LOCK | |
| 214 | *3-686-675-01 | STOPPER, RING | |
| 215 | A-7040-065-A | MOTOR ASSY, L (LOADING) M904 | 216, 217 |
| 216 | *3-686-757-01 | CAP, SHIELD, L MOTOR | |
| 217 | 1-161-057-00 | CAP, CERAMIC 0.033MF X C901 | |
| 218 | *3-686-636-04 | ARM, T.S RELEASE | |
| 219 | 1-454-377-31 | SOLENOID, PLUNGER (BRAKE) PM901 | |
| 220 | 3-697-518-01 | GEAR, NO.10 | |

| No. | Part No. | Description | Remark |
|---|---|---|---|
| 221 | *3-686-911-01 | PLATE, TOP, ROLLER | |
| 222 | A-7040-123-A | RING ASSY, LOADING | 209, 223 |
| 223 | X-3686-648-2 | ARM ASSY, PINCH ROLLER | |
| 224 | 3-686-724-01 | NUT, GUIDE | |
| 225 | *3-686-894-01 | FLANGE, #3 #4 GUIDE | |
| 226 | 3-686-912-01 | GUIDE, #3 #4 | |
| 227 | 3-699-609-01 | SPRING, COMPRESSION | |
| 228 | A-7040-054-A | GUIDE (P) ASSY, ENTRANCE | |
| 229 | 8-835-247-01 | MOTOR, DC BHF-2804D (CAPSTAN) M906 | |
| 230 | X-3686-514-1 | GEAR ASSY, NO.1 | |
| 231 | 3-686-508-01 | GEAR, NO.2 | |
| 232 | 3-686-545-01 | GEAR, NO.3 | |
| 233 | 3-686-544-01 | GEAR, NO.4 | |
| 234 | 3-686-546-01 | BELT, L- MOTOR | |
| 235 | *3-686-629-01 | SLIDER, SELECTION, UPPER & LOWER | |
| 236 | X-3686-895-1 | BRAKE ASSY, S MAIN | |
| 237 | 3-713-560-01 | SPRING, TENSION | |
| 238 | *3-686-635-01 | ARM, P | |
| 239 | X-3686-574-1 | BRAKE ASSY, MAIN, TAKE-UP | |

## 5-6. CHASSIS ASSEMBLY 2

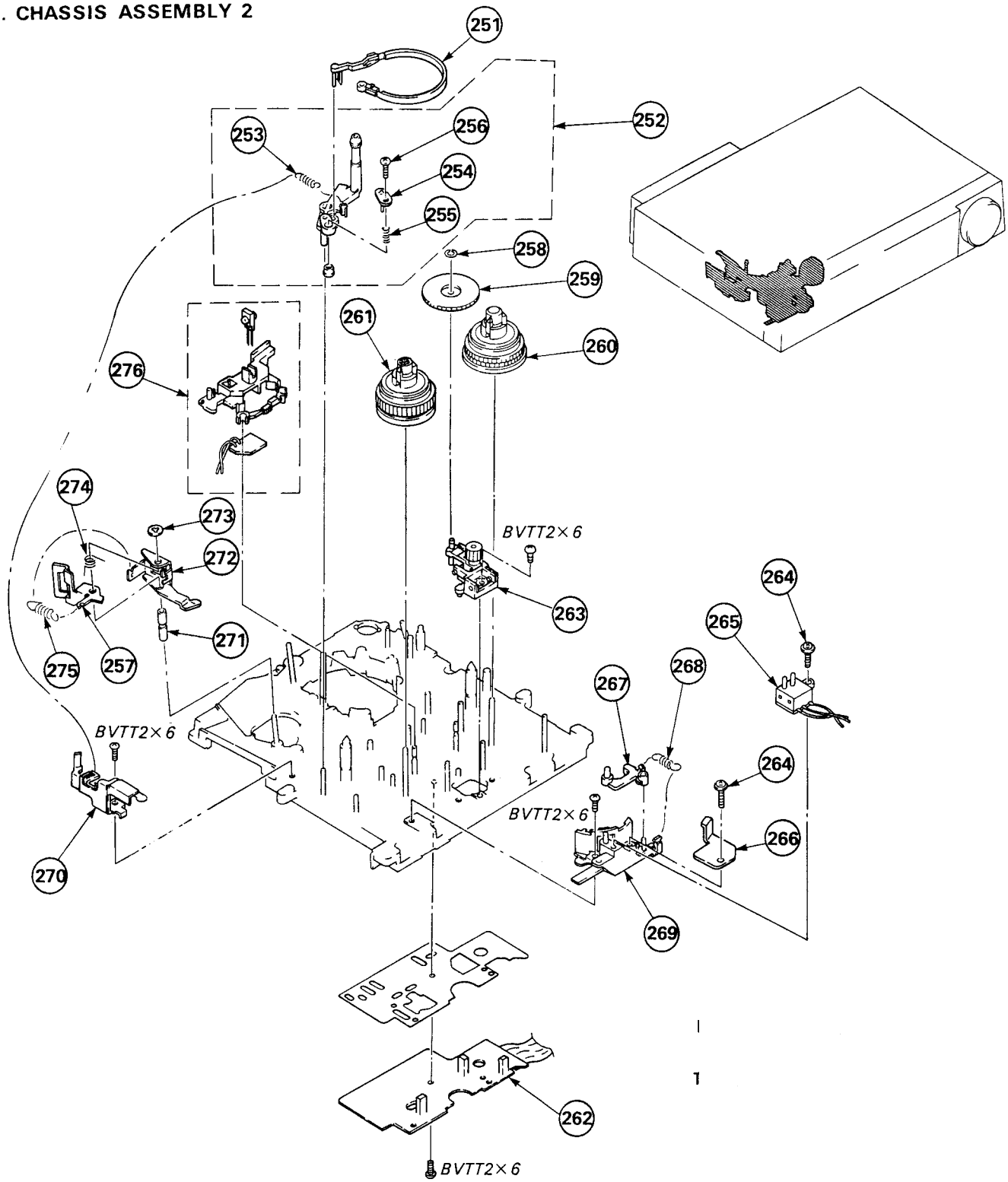


| No. | Part No. | Description | Remark |
|---|---|---|---|
| 251 | X-3686-531-1 | BAND ASSY, TENSION REGULATOR | |
| 252 | A-7040-071-A | ARM ASSY, TENSION REGULATOR | 253-256 |
| 253 | 3-699-519-01 | SPRING, TENSION | |
| 254 | *X-3686-523-1 | PLATE ASSY, TENSION REGULATOR | |
| 255 | 3-669-666-00 | SPRING, COMPRESSION | |
| 256 | 3-697-546-01 | SCREW (+-M2X6), SPECIAL | |
| 257 | *3-686-641-01 | ARM, PINCH PRESS | |
| 258 | 3-315-384-31 | WASHER, STOPPER | |
| 259 | X-3686-763-1 | GEAR (B) ASSY, DRIVING | |
| 260 | X-3686-572-2 | TABLE ASSY, REEL, TAKE-UP | |
| 261 | X-3711-962-1 | TABEL ASSY, SUPPLY REEL | |
| 262 | *A-7060-411-A | RS-17 BOARD, COMPLETE | |
| 263 | X-3711-963-1 | DRIVING COMPLETE ASSY | |

| No. | Part No. | Description | Remark |
|---|---|---|---|
| 264 | 3-669-480-11 | + PTPWH 2 | |
| 265 | 1-554-942-11 | SWITCH, PUSH (RECOG R) S901 | |
| 266 | *3-686-991-01 | STOPPER, REEL TABLE | |
| 267 | *3-686-637-01 | BRAKE (S), SOFT | |
| 268 | 3-696-082-01 | SPRING, TENSION | |
| 269 | *3-686-760-01 | GUIDE, BAND | |
| 270 | *X-3686-525-1 | HOOK ASSY, SPRING | |
| 271 | *3-686-567-01 | SLEEVE, PINCH PRESS | |
| 272 | *3-686-660-01 | ARM, PINCH LIMITER | |
| 273 | 3-669-465-00 | WASHER (1.5), STOPPER | |
| 274 | 3-686-568-01 | SPRING, TORSION | |
| 275 | 3-686-885-01 | SPRING, TENSION | |
| 276 | *A-7070-024-A | LD-1 BOARD, COMPLETE | |

## 5-7. CHASSIS ASSEMBLY 3

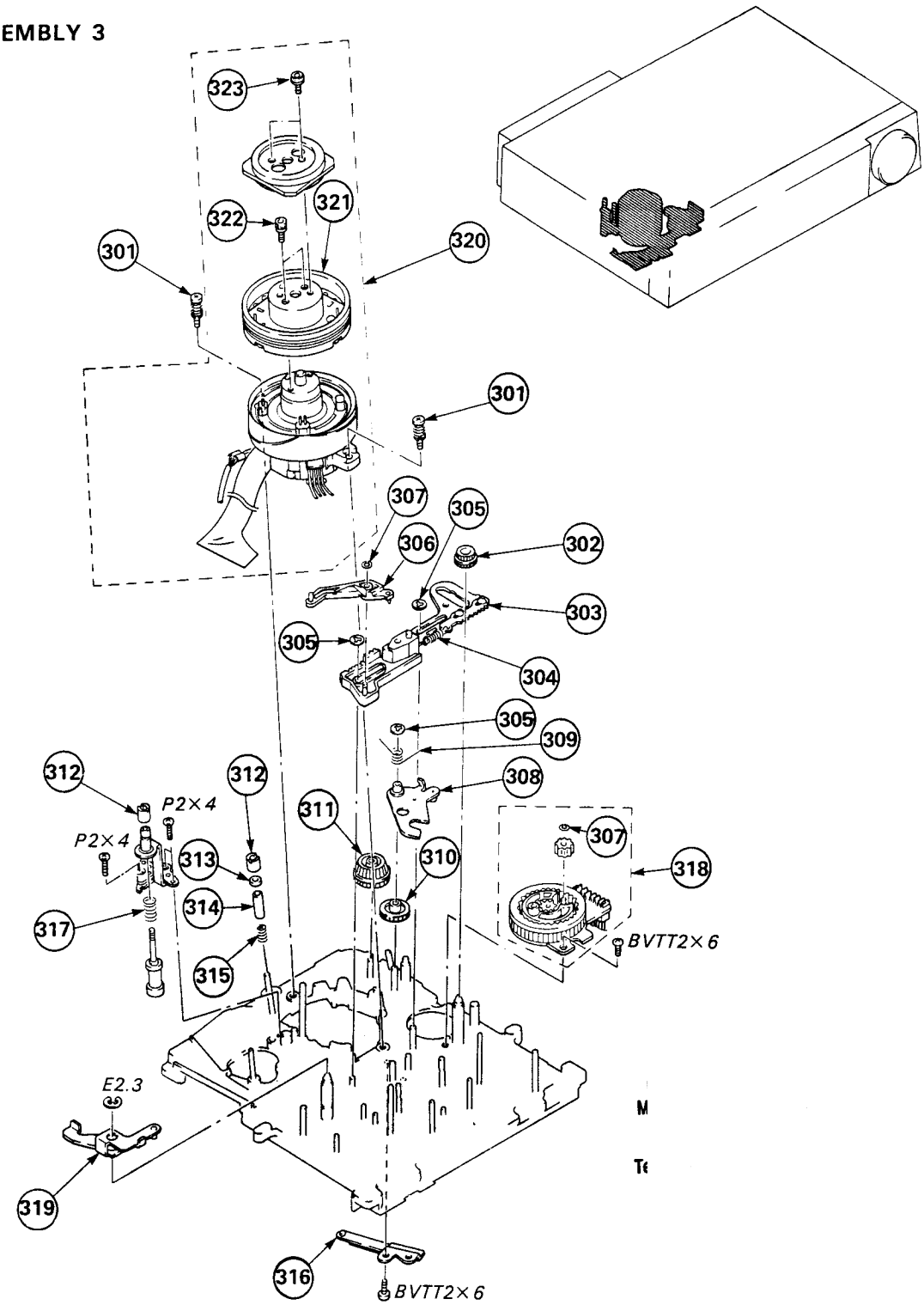


| No. | Part No. | Description | Remark |
|---|---|---|---|
| 301 | X-3686-569-1 | SCREW ASSY, FITTING | |
| 302 | 3-686-702-01 | GEAR, DRIVING, GUIDE, SLANT | |
| 303 | *X-3686-548-2 | SLIDER SUB ASSY, L | |
| 304 | 3-686-886-01 | SPRING, TENSION | |
| 305 | 3-669-465-00 | WASHER (1.5), STOPPER | |
| 306 | *X-3686-518-3 | ARM ASSY | |
| 307 | 3-701-437-11 | WASHER | |
| 308 | X-3686-579-1 | CHANGE ASSY, DRIVE | |
| 309 | 3-686-540-01 | SPRING, TORSION | |
| 310 | 3-686-535-01 | GEAR, NO.8 | |
| 311 | 3-686-539-01 | GEAR, NO.9 | |
| 312 | 3-686-724-01 | NUT, GUIDE | |
| 313 | *3-686-894-01 | FLANGE, #3 #4 GUIDE | |
| 314 | 3-686-912-01 | GUIDE, #3 #4 | |
| 315 | 3-699-609-01 | SPRING, COMPRESSION | |
| 316 | 1-535-535-11 | TERMINAL, SHAFT GROUND | |
| 317 | 3-699-514-01 | SPRING, COMPRESSION | |
| 318 | X-3712-403-1 | L-SW ASSY | 307 |
| 319 | *X-3686-509-1 | LEVER ASSY, PINCH PRESS | |
| 320 | A-7048-102-A | DRUM ASSY (DGH-12D-R) | 321-323 |
| 321 | A-7049-121-A | DRUM ASSY, UPPER, ROTARY (DGR-12-R) | |
| 322 | 3-686-403-01 | SCREW (2X5), BOLT WASHER | |
| 323 | 3-686-422-01 | WASHER (2X2.7), BOLT, HOLE | |

## 5-8. CHASSIS ASSEMBLY 4

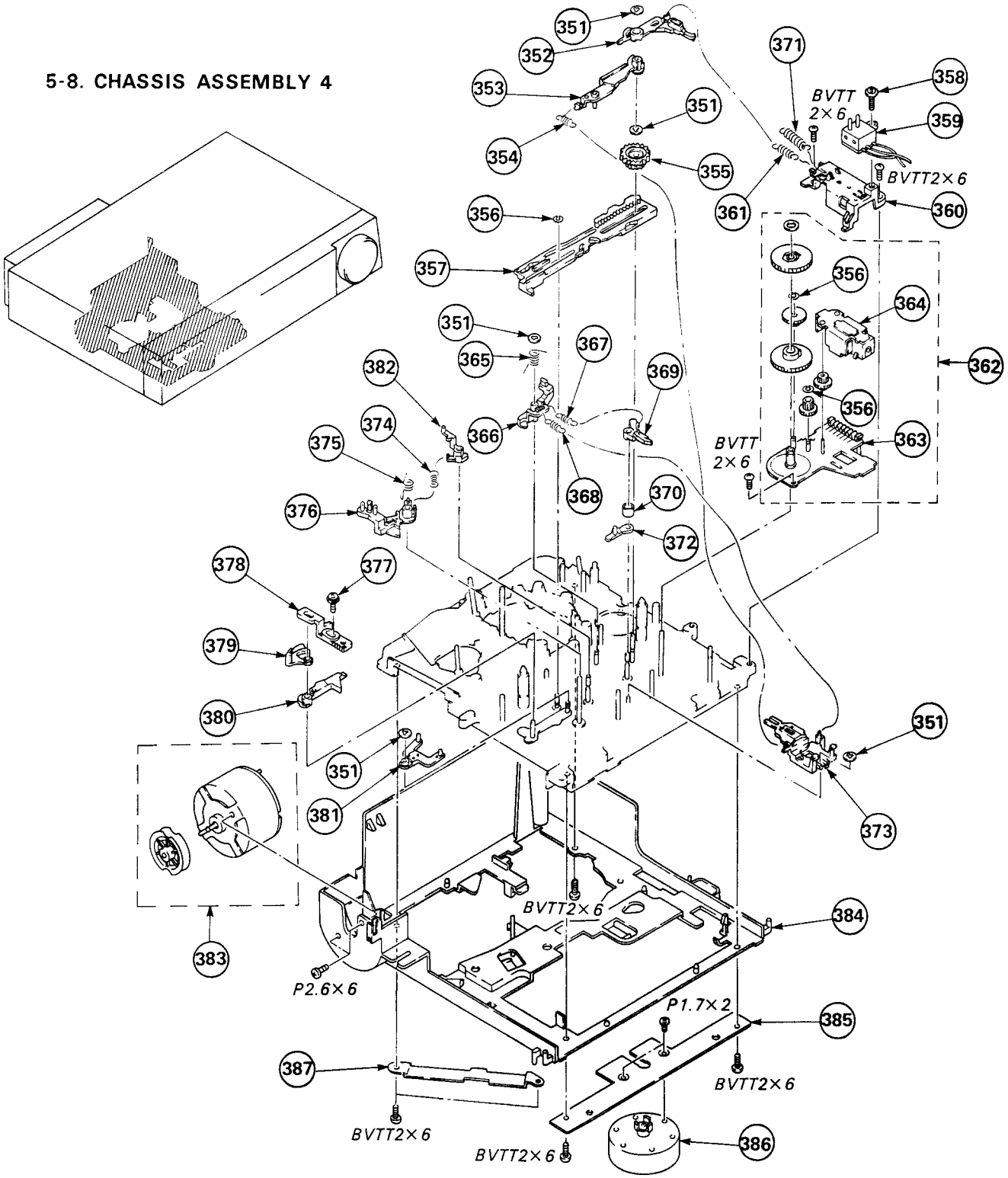


| No. | Part No. | Description | Remark |
|---|---|---|---|
| 351 | 3-669-465-00 | WASHER (1.5), STOPPER | |
| 352 | X-3686-777-1 | BRAKE ASSY, T.S | |
| 353 | *X-3686-528-4 | ARM ASSY, B RELEASE | |
| 354 | 3-686-903-01 | SPRING, TENSION | |
| 355 | 3-686-909-01 | GEAR, MODE OUTPUT | |
| 356 | 3-315-384-31 | WASHER, STOPPER | |
| 357 | 3-716-935-01 | SLIDER, M | |
| 358 | 3-669-480-11 | + PTPWH 2 | |
| 359 | 1-554-942-11 | SWITCH, PUSH (RECOG L) S902 | |
| 360 | *3-699-556-01 | COVER, CONTROL MOTOR | |
| 361 | 3-714-035-00 | SPRING, TENSION | |
| 362 | A-7090-029-A | M-SW ASSY | 356, 363, 364 |
| 363 | *A-7070-025-A | MS-4 BOARD, COMPLETE | |
| 364 | 8-835-138-01 | MOTOR, DC (DNR-5301B) (CONTROL) M903 | |
| 365 | 3-686-579-01 | SPRING | |
| 366 | *3-686-634-01 | ARM, RL | |
| 367 | 3-686-906-01 | SPRING, TENSION | |
| 368 | 3-686-904-01 | SPRING, TENSION | |
| 369 | X-3686-510-1 | BRAKE ASSY, REW | |

| No. | Part No. | Description | Remark |
|---|---|---|---|
| 370 | 3-716-933-01 | SPACER, REW BRAKE | |
| 371 | 3-699-650-01 | SPRING, TENSION | |
| 372 | *3-686-580-01 | ARM, SET UP | |
| 373 | *3-686-656-01 | SLIDER, B RELEASE | |
| 374 | 3-686-905-02 | SPRING, TENSION | |
| 375 | 3-686-603-04 | SPRING | |
| 376 | *3-686-644-01 | ARM, BAND | |
| 377 | 3-686-528-01 | SCREW (2X6), + | |
| 378 | *3-686-642-01 | PLATE, ADJUSTMENT, BAND | |
| 379 | *3-716-934-01 | DISK, EJECT | |
| 380 | *3-686-643-01 | ARM, MODE | |
| 381 | *X-3686-530-1 | ARM (A) ASSY, SELECTION | |
| 382 | 3-686-996-01 | BRAKE (S), HARD | |
| 383 | A-7090-661-A | MOTOR BLOCK ASSY, LS (LINEAR SKATE) M905 | |
| 384 | *3-716-915-01 | FRAME, MD | |
| 385 | *3-716-922-01 | BRACKET, REEL MOTOR | |
| 386 | X-3711-961-1 | MOTOR SUB ASSY, REEL | |
| 387 | *3-716-894-01 | RETAINER, ROTOR | |

## 5-9. HARDWARE LIST

SCREW

7-621-255-20 SCREW +P 2X4
7-621-255-50 SCREW +P 2X8
7-621-772-20 SCREW +B 2X5
7-627-552-28 SCREW, PRECISION +P 1.7X2
7-627-553-48 SCREW, PRECISION +P 2X4

7-628-254-00 SCREW +PS 2.6X5
7-682-549-09 SCREW +B 3X10
7-685-133-19 SCREW +P 2.6X6 TYPE1
7-685-233-19 SCREW +KTP 2.6X6 TYPE2NON-SLIT
7-685-645-79 SCREW +BVTP 3X6 TYPE2 IT-3

7-685-645-79 SCREW +BVTP 3X6 TYPE2
7-685-646-79 SCREW +BVTP 3X8 TYPE2 IT-3
7-685-646-79 SCREW +BVTP 3X8 TYPE2
7-685-780-04 SCREW +PTT 2X3 (S)
7-685-853-01 SCREW +BVTT 2X6 (S)

STOP RING

7-624-101-01 STOP RING 1.2 (E TYPE)
7-624-102-04 STOP RING 1.5, TYPE -E
7-624-105-04 STOP RING 2.3, TYPE -E
7-624-106-04 STOP RING 3.0, TYPE -E
7-624-190-71 STOP RING 5, TYPE-CS

DRUM****

SCREW

7-621-255-15 SCREW +P 2X3
7-621-255-25 SCREW +P 2X4
7-621-734-09 SET-SCT, HEX, 2.6X3

WASHER

7-623-420-07 LW 2, TYPE B

# PW-30 RS-17

# SECTION 6
# ELECTRICAL PARTS LIST

NOTE:

The components identified by shading and mark ⚠ are critical for safety. Replace only with part number specified.

When indicating parts by reference number, please include the board name.

- Due to standardization, replacements in the parts list may be different from the parts specified in the diagrams or the components used on the set.
- All variable and adjustable resistors have characteristic curve B, unless otherwise noted.

RESISTORS
- All resistors are in ohms
- F : nonflammable

- Items marked "*" are not stocked since they are seldom required for routine service. Some delay should be anticipated when ordering these items.

CAPACITORS
- MF : μF, PF : μμF

COILS
- MMH : mH, UH : μH

| Ref.No | Part No. | Description | | | Remark |
|---|---|---|---|---|---|
| | *A-7060-407-A | PW-30 BOARD, COMPLETE ********** | | | |
| | *3-662-205-00 | HOLDER (E), LED | | | |
| | *3-716-919-01 | HOLDER, LEVEL INDICATION TUBE | | | |
| | | CAPACITOR | | | |
| C201 | 1-163-023-00 | CERAMIC CHIP 0.015MF | 10% | 50V | |
| C301 | 1-124-234-00 | ELECT 22MF | 20% | 10V | |
| C302 | 1-124-257-00 | ELECT 2.2MF | 20% | 35V | |
| C303 | 1-163-021-00 | CERAMIC CHIP 0.01MF | | 50V | |
| C401 | 1-124-234-00 | ELECT 22MF | 20% | 10V | |
| C402 | 1-124-257-00 | ELECT 2.2MF | 20% | 35V | |
| C403 | 1-163-021-00 | CERAMIC CHIP 0.01MF | | 50V | |
| | | COMPOSITION CIRCUIT BLOCK | | | |
| CP201 | 1-232-957-11 | COMPOSITION CIRCUIT BLOCK | | | |
| CP202 | 1-232-967-11 | COMPOSITION CIRCUIT BLOCK | | | |
| | | DIODE | | | |
| D101 | 8-719-812-33 | DIODE TLG123A | | | |
| D102 | 8-719-118-29 | DIODE 1SS220 | | | |
| D103 | 8-719-105-32 | DIODE RD2.7M-B2 | | | |
| D104 | 8-719-907-29 | DIODE EQA11-09A | | | |
| D105 | 8-719-907-29 | DIODE EQA11-09A | | | |
| | | IC | | | |
| IC101 | 8-741-138-70 | IC BX-1387 | | | |
| IC201 | 8-759-745-64 | IC NJM4560M | | | |
| IC202 | 8-759-933-54 | IC BA6800AF | | | |
| | | JACK | | | |
| J201 | 1-507-792-21 | JACK | | | |
| | | INDICATOR TUBE | | | |
| ND201 | 1-519-406-11 | INDICATOR TUBE, FLUORESCENT | | | |
| | | TRANSISTOR | | | |
| Q211 | 8-729-100-76 | TRANSISTOR 2SA812 | | | |
| Q212 | 8-729-100-76 | TRANSISTOR 2SA812 | | | |
| Q213 | 8-729-100-76 | TRANSISTOR 2SA812 | | | |
| | | RESISTOR | | | |
| R101 | 1-216-041-00 | METAL CHIP 470 | 5% | 1/10W | |
| R103 | 1-216-073-00 | METAL CHIP 10K | 5% | 1/10W | |
| R211 | 1-216-083-00 | METAL CHIP 27K | 5% | 1/10W | |
| R213 | 1-216-057-00 | METAL CHIP 2.2K | 5% | 1/10W | |
| R214 | 1-216-073-00 | METAL CHIP 10K | 5% | 1/10W | |
| R215 | 1-216-057-00 | METAL CHIP 2.2K | 5% | 1/10W | |
| R216 | 1-216-073-00 | METAL CHIP 10K | 5% | 1/10W | |
| R217 | 1-216-085-00 | METAL CHIP 33K | 5% | 1/10W | |
| R218 | 1-216-073-00 | METAL CHIP 10K | 5% | 1/10W | |
| R240 | 1-216-001-00 | METAL CHIP 10 | 5% | 1/10W | |
| R241 | 1-216-073-00 | METAL CHIP 10K | 5% | 1/10W | |
| R301 | 1-216-017-00 | METAL CHIP 47 | 5% | 1/10W | |
| R302 | 1-216-065-00 | METAL CHIP 4.7K | 5% | 1/10W | |
| R303 | 1-216-075-00 | METAL CHIP 12K | 5% | 1/10W | |
| R304 | 1-216-021-00 | METAL CHIP 68 | 5% | 1/10W | |
| R311 | 1-216-109-00 | METAL CHIP 330K | 5% | 1/10W | |
| R313 | 1-216-053-00 | METAL CHIP 1.5K | 5% | 1/10W | |
| R314 | 1-216-295-00 | METAL CHIP 0 | 5% | 1/10W | |
| R315 | 1-216-295-00 | METAL CHIP 0 | 5% | 1/10W | |
| R401 | 1-216-017-00 | METAL CHIP 47 | 5% | 1/10W | |
| R402 | 1-216-065-00 | METAL CHIP 4.7K | 5% | 1/10W | |
| R403 | 1-216-075-00 | METAL CHIP 12K | 5% | 1/10W | |
| R404 | 1-216-021-00 | METAL CHIP 68 | 5% | 1/10W | |
| R411 | 1-216-109-00 | METAL CHIP 330K | 5% | 1/10W | |
| R413 | 1-216-053-00 | METAL CHIP 1.5K | 5% | 1/10W | |
| R414 | 1-216-295-00 | METAL CHIP 0 | 5% | 1/10W | |
| R415 | 1-216-295-00 | METAL CHIP 0 | 5% | 1/10W | |
| | | VARIABLE RESISTOR | | | |
| RV201 | 1-228-988-00 | RES, VAR, CARBON 10K/10K | | | |
| RV301 | 1-237-589-11 | RES, VAR, SLIDE 10K/10K | | | |
| | | SWITCH | | | |
| S101 | 1-554-174-00 | SWITCH, KEY BOARD | | | |
| ********** | | | | | |
| | *A-7060-411-A | RS-17 BOARD, COMPLETE ********** | | | |
| | 3-712-410-01 | HOLDER, RS | | | |
| | | CAPACITOR | | | |
| C001 | 1-163-038-00 | CERAMIC CHIP 0.1MF | | 25V | |
| C002 | 1-124-465-00 | ELECT 0.47MF | 20% | 50V | |
| C003 | 1-123-608-00 | ELECT 0.22MF | 20% | 50V | |
| C004 | 1-163-038-00 | CERAMIC CHIP 0.1MF | | 25V | |
| C005 | 1-163-021-00 | CERAMIC CHIP 0.01MF | 10% | 50V | |
| C006 | 1-163-021-00 | CERAMIC CHIP 0.01MF | 10% | 50V | |
| | | CONNECTOR | | | |
| CN002 | *1-564-003-00 | PIN, CONNECTOR 4P | | | |
| CN003 | *1-564-003-00 | PIN, CONNECTOR 4P | | | |
| CN004 | *1-564-001-11 | PIN, CONNECTOR 2P | | | |
| CN005 | *1-564-001-11 | PIN, CONNECTOR 2P | | | |
| CN006 | *1-564-001-11 | PIN, CONNECTOR 2P | | | |
| | | IC | | | |
| IC001 | 8-759-107-68 | IC CX20115A | | | |
| IC002 | 8-759-100-93 | IC UPC393G2 | | | |
| | | DIODE | | | |
| PH001 | 8-719-939-11 | GP2S09-B | | | |

| Ref.No | Part No. | Description | | | Remark |
|---|---|---|---|---|---|
| PH002 | 8-719-939-11 | GP2S09-B | | | |
| PH003 | 8-719-939-11 | GP2S09-B | | | |
| | | **TRANSISTOR** | | | |
| Q001 | 8-729-901-01 | TRANSISTOR DTC144EK | | | |
| Q002 | 8-729-901-01 | TRANSISTOR DTC144EK | | | |
| Q003 | 8-729-901-01 | TRANSISTOR DTC144EK | | | |
| Q004 | 8-729-903-97 | TRANSISTOR FMS1FE | | | |
| Q005 | 8-729-903-82 | TRANSISTOR FMW2 | | | |
| | | **RESISTOR** | | | |
| R001 | 1-216-081-00 | METAL CHIP | 22K | 5% 1/10W | |
| R002 | 1-216-055-00 | METAL CHIP | 1.8K | 5% 1/10W | |
| R003 | 1-216-031-00 | METAL CHIP | 180 | 5% 1/10W | |
| R004 | 1-216-174-00 | METAL CHIP | 100 | 5% 1/8W | |
| R005 | 1-216-089-00 | METAL CHIP | 47K | 5% 1/10W | |
| R006 | 1-216-089-00 | METAL CHIP | 47K | 5% 1/10W | |
| R007 | 1-216-089-00 | METAL CHIP | 47K | 5% 1/10W | |
| R008 | 1-216-073-00 | METAL CHIP | 10K | 5% 1/10W | |
| R009 | 1-216-073-00 | METAL CHIP | 10K | 5% 1/10W | |
| R010 | 1-216-073-00 | METAL CHIP | 10K | 5% 1/10W | |
| R011 | 1-216-073-00 | METAL CHIP | 10K | 5% 1/10W | |
| R012 | 1-216-073-00 | METAL CHIP | 10K | 5% 1/10W | |
| R013 | 1-216-107-00 | METAL CHIP | 270K | 5% 1/10W | |
| R014 | 1-216-073-00 | METAL CHIP | 10K | 5% 1/10W | |
| R015 | 1-216-107-00 | METAL CHIP | 270K | 5% 1/10W | |
| R016 | 1-216-073-00 | METAL CHIP | 10K | 5% 1/10W | |
| R017 | 1-216-073-00 | METAL CHIP | 10K | 5% 1/10W | |
| R018 | 1-216-107-00 | METAL CHIP | 270K | 5% 1/10W | |
| R019 | 1-216-073-00 | METAL CHIP | 10K | 5% 1/10W | |
| R020 | 1-216-107-00 | METAL CHIP | 270K | 5% 1/10W | |
| | | **THERMISTOR** | | | |
| THP001 | 1-806-886-11 | THERMISTOR (POSITIVE) | | | |

**********

*A-7060-466-A RP-36 BOARD, COMPLETE

**********

| | | | | | |
|---|---|---|---|---|---|
| | | **CAPACITOR** | | | |
| C101 | 1-135-095-00 | TANTAL. CHIP | 1.5MF | 20% | 10V |
| C102 | 1-135-095-00 | TANTAL. CHIP | 1.5MF | 20% | 10V |
| C103 | 1-163-021-00 | CERAMIC CHIP | 0.01MF | | 50V |
| C104 | 1-163-021-00 | CERAMIC CHIP | 0.01MF | | 50V |
| C105 | 1-124-638-11 | ELECT | 22MF | 20% | 6.3V |
| C106 | 1-163-038-00 | CERAMIC CHIP | 0.1MF | | 25V |
| C107 | 1-163-038-00 | CERAMIC CHIP | 0.1MF | | 25V |
| C108 | 1-124-638-11 | ELECT | 22MF | 20% | 6.3V |
| C109 | 1-163-021-00 | CERAMIC CHIP | 0.01MF | | 50V |
| C110 | 1-163-035-00 | CERAMIC CHIP | 0.047MF | 10% | 25V |
| C111 | 1-163-033-00 | CERAMIC CHIP | 0.022MF | | 50V |
| C112 | 1-163-021-00 | CERAMIC CHIP | 0.01MF | | 50V |
| C113 | 1-163-818-00 | CERAMIC CHIP | 0.1MF | 10% | 50V |
| C114 | 1-163-818-00 | CERAMIC CHIP | 0.1MF | 10% | 50V |
| C115 | 1-163-021-00 | CERAMIC CHIP | 0.01MF | | 50V |
| C116 | 1-163-035-00 | CERAMIC CHIP | 0.047MF | 10% | 25V |
| C117 | 1-163-033-00 | CERAMIC CHIP | 0.022MF | | 50V |
| C118 | 1-163-021-00 | CERAMIC CHIP | 0.01MF | | 50V |
| C119 | 1-163-818-00 | CERAMIC CHIP | 0.1MF | 10% | 50V |
| C120 | 1-163-818-00 | CERAMIC CHIP | 0.1MF | 10% | 50V |
| C121 | 1-163-021-00 | CERAMIC CHIP | 0.01MF | 10% | 50V |
| C122 | 1-163-107-00 | CERAMIC CHIP | 39PF | 5% | 50V |
| C123 | 1-163-021-00 | CERAMIC CHIP | 0.01MF | | 50V |
| C124 | 1-163-038-00 | CERAMIC CHIP | 0.1MF | | 25V |
| C125 | 1-124-638-11 | ELECT | 22MF | 20% | 6.3V |
| C126 | 1-163-021-00 | CERAMIC CHIP | 0.01MF | | 50V |
| C127 | 1-163-021-00 | CERAMIC CHIP | 0.01MF | | 50V |
| C128 | 1-123-611-00 | ELECT | 1MF | 20% | 50V |
| C129 | 1-124-638-11 | ELECT | 22MF | 20% | 6.3V |
| C130 | 1-163-021-00 | CERAMIC CHIP | 0.01MF | | 50V |
| C131 | 1-163-021-00 | CERAMIC CHIP | 0.01MF | 10% | 50V |
| C132 | 1-123-611-00 | ELECT | 1MF | 20% | 50V |
| C133 | 1-163-107-00 | CERAMIC CHIP | 39PF | 5% | 50V |
| C134 | 1-163-035-00 | CERAMIC CHIP | 0.047MF | | 50V |
| C136 | 1-163-017-00 | CERAMIC CHIP | 0.0047MF | 10% | 50V |
| C137 | 1-163-033-00 | CERAMIC CHIP | 0.022MF | 10% | 25V |
| C138 | 1-163-033-00 | CERAMIC CHIP | 0.022MF | 10% | 25V |
| C139 | 1-163-021-00 | CERAMIC CHIP | 0.01MF | | 50V |
| C140 | 1-123-617-00 | ELECT | 10MF | 20% | 16V |
| C201 | 1-135-095-00 | TANTAL. CHIP | 1.5MF | 20% | 10V |
| C202 | 1-135-095-00 | TANTAL. CHIP | 1.5MF | 20% | 10V |
| C203 | 1-163-021-00 | CERAMIC CHIP | 0.01MF | | 50V |
| C204 | 1-163-021-00 | CERAMIC CHIP | 0.01MF | | 50V |
| C205 | 1-124-638-11 | ELECT | 22MF | 20% | 6.3V |
| C206 | 1-163-038-00 | CERAMIC CHIP | 0.1MF | | 25V |
| C207 | 1-163-038-00 | CERAMIC CHIP | 0.1MF | | 25V |
| C208 | 1-124-638-11 | ELECT | 22MF | 20% | 6.3V |
| C209 | 1-163-021-00 | CERAMIC CHIP | 0.01MF | | 50V |
| C210 | 1-163-035-00 | CERAMIC CHIP | 0.047MF | 10% | 25V |
| C211 | 1-163-021-00 | CERAMIC CHIP | 0.01MF | | 50V |
| C212 | 1-163-021-00 | CERAMIC CHIP | 0.01MF | | 50V |
| C213 | 1-163-818-00 | CERAMIC CHIP | 0.1MF | 10% | 50V |
| C214 | 1-163-818-00 | CERAMIC CHIP | 0.1MF | 10% | 50V |
| C215 | 1-163-021-00 | CERAMIC CHIP | 0.01MF | | 50V |
| C216 | 1-163-035-00 | CERAMIC CHIP | 0.047MF | 10% | 25V |
| C217 | 1-163-021-00 | CERAMIC CHIP | 0.01MF | | 50V |
| C218 | 1-163-021-00 | CERAMIC CHIP | 0.01MF | | 50V |
| C219 | 1-163-818-00 | CERAMIC CHIP | 0.1MF | 10% | 50V |
| C220 | 1-163-818-00 | CERAMIC CHIP | 0.1MF | 10% | 50V |
| C221 | 1-163-021-00 | CERAMIC CHIP | 0.01MF | 10% | 50V |
| C222 | 1-163-109-00 | CERAMIC CHIP | 47PF | 5% | 50V |
| C223 | 1-163-021-00 | CERAMIC CHIP | 0.01MF | | 50V |
| C224 | 1-163-038-00 | CERAMIC CHIP | 0.1MF | | 25V |
| C225 | 1-124-638-11 | ELECT | 22MF | 20% | 6.3V |
| C226 | 1-163-021-00 | CERAMIC CHIP | 0.01MF | | 50V |
| C227 | 1-163-021-00 | CERAMIC CHIP | 0.01MF | | 50V |

When indicating parts by reference number, please include the board name.

| Ref.No | Part No. | Description | | | Remark |
|---|---|---|---|---|---|
| C228 | 1-123-611-00 | ELECT | 1MF | 20% | 50V |
| C229 | 1-124-638-11 | ELECT | 22MF | 20% | 6.3V |
| C230 | 1-163-021-00 | CERAMIC CHIP | 0.01MF | | 50V |
| C231 | 1-163-021-00 | CERAMIC CHIP | 0.01MF | 10% | 50V |
| C232 | 1-123-611-00 | ELECT | 1MF | 20% | 50V |
| C233 | 1-163-109-00 | CERAMIC CHIP | 47PF | 5% | 50V |
| C237 | 1-163-033-00 | CERAMIC CHIP | 0.022MF | 10% | 25V |
| C238 | 1-163-033-00 | CERAMIC CHIP | 0.022MF | 10% | 25V |
| C239 | 1-163-021-00 | CERAMIC CHIP | 0.01MF | | 50V |
| C240 | 1-163-038-00 | CERAMIC CHIP | 0.1MF | | 25V |
| C241 | 1-163-038-00 | CERAMIC CHIP | 0.1MF | | 25V |
| C301 | 1-163-021-00 | CERAMIC CHIP | 0.01MF | | 50V |
| C302 | 1-163-021-00 | CERAMIC CHIP | 0.01MF | | 50V |
| C303 | 1-124-462-00 | ELECT | 10MF | 20% | 16V |
| C304 | 1-163-021-00 | CERAMIC CHIP | 0.01MF | | 50V |
| C305 | 1-163-021-00 | CERAMIC CHIP | 0.01MF | | 50V |
| C306 | 1-163-038-00 | CERAMIC CHIP | 0.1MF | | 25V |
| C307 | 1-163-021-00 | CERAMIC CHIP | 0.01MF | | 50V |
| C308 | 1-163-021-00 | CERAMIC CHIP | 0.01MF | | 50V |
| C309 | 1-123-617-00 | ELECT | 10MF | 20% | 16V |
| C401 | 1-163-141-00 | CERAMIC CHIP | 0.001MF | 10% | 50V |
| C402 | 1-163-021-00 | CERAMIC CHIP | 0.01MF | | 50V |
| C403 | 1-163-141-00 | CERAMIC CHIP | 0.001MF | 10% | 50V |
| C404 | 1-163-117-00 | CERAMIC CHIP | 100PF | 5% | 50V |
| C405 | 1-163-117-00 | CERAMIC CHIP | 100PF | 5% | 50V |
| C406 | 1-163-121-00 | CERAMIC CHIP | 150PF | 5% | 50V |
| C407 | 1-163-117-00 | CERAMIC CHIP | 100PF | 5% | 50V |

CONNECTOR

| | | |
|---|---|---|
| CN001 | 1-562-629-11 | SOCKET, CONNECTOR (19P) |
| CN002 | *1-564-001-11 | PIN, CONNECTOR 2P |
| CN003 | *1-564-005-00 | PIN, CONNECTOR 6P |
| CN004 | *1-564-004-00 | PIN, CONNECTOR 5P |
| CN005 | *1-564-007-00 | PIN, CONNECTOR 8P |
| CN006 | *1-564-002-00 | PIN, CONNECTOR 3P |
| CN007 | *1-564-002-00 | PIN, CONNECTOR 3P |
| CN008 | *1-564-017-00 | PIN, CONNECTOR 7P |

DIODE

| | | |
|---|---|---|
| D101 | 8-719-100-03 | DIODE 1S2835 |

IC

| | | |
|---|---|---|
| IC001 | 8-752-003-40 | IC CX20034 |
| IC002 | 8-752-003-40 | IC CX20034 |

COIL

| | | | |
|---|---|---|---|
| L101 | 1-408-791-00 | INDUCTOR CHIP | 150UH |
| L103 | 1-407-189-XX | MICRO INDUCTOR | 15UH |
| L104 | 1-407-189-XX | MICRO INDUCTOR | 15UH |
| L105 | 1-408-970-21 | MICRO INDUCTOR | 10UH |
| L106 | 1-407-161-XX | MICRO INDUCTOR | 22UH |
| L107 | 1-408-794-00 | INDUCTOR CHIP | 270UH |
| L108 | 1-408-794-00 | INDUCTOR CHIP | 270UH |
| L201 | 1-408-791-00 | INDUCTOR CHIP | 150UH |
| L203 | 1-407-158-XX | MICRO INDUCTOR | 12UH |
| L204 | 1-407-158-XX | MICRO INDUCTOR | 12UH |
| L205 | 1-408-970-21 | MICRO INDUCTOR | 10UH |
| L206 | 1-407-161-XX | MICRO INDUCTOR | 22UH |
| L207 | 1-408-794-00 | INDUCTOR CHIP | 270UH |
| L208 | 1-408-794-00 | INDUCTOR CHIP | 270UH |
| L301 | 1-408-970-21 | MICRO INDUCTOR | 10UH |
| L302 | 1-407-163-XX | MICRO INDUCTOR | 33UH |
| L401 | 1-408-948-00 | MICRO INDUCTOR | 220UH |
| L402 | 1-408-970-21 | MICRO INDUCTOR | 10UH |

TRANSISTOR

| | | |
|---|---|---|
| Q101 | 8-729-202-38 | TRANSISTOR 2SC3326N |
| Q102 | 8-729-202-38 | TRANSISTOR 2SC3326N |
| Q103 | 8-729-901-05 | TRANSISTOR DTA124EK |
| Q104 | 8-729-312-22 | TRANSISTOR 2SA1122 |
| Q105 | 8-729-901-01 | TRANSISTOR DTC144EK |
| Q201 | 8-729-202-38 | TRANSISTOR 2SC3326N |
| Q202 | 8-729-202-38 | TRANSISTOR 2SC3326N |
| Q203 | 8-729-901-05 | TRANSISTOR DTA124EK |
| Q301 | 8-729-100-67 | TRANSISTOR 2SC1623-L7 |
| Q302 | 8-729-901-01 | TRANSISTOR DTC144EK |
| Q303 | 8-729-901-01 | TRANSISTOR DTC144EK |
| Q304 | 8-729-100-67 | TRANSISTOR 2SC1623-L7 |
| Q307 | 8-729-100-67 | TRANSISTOR 2SC1623-L7 |
| Q308 | 8-729-100-67 | TRANSISTOR 2SC1623-L7 |
| Q402 | 8-729-100-76 | TRANSISTOR 2SA812 |
| Q403 | 8-729-117-54 | TRANSISTOR 2SA1175 |
| Q404 | 8-729-312-22 | TRANSISTOR 2SA1122 |

RESISTOR

| | | | | | |
|---|---|---|---|---|---|
| R101 | 1-216-065-00 | METAL CHIP | 4.7K | 5% | 1/10W |
| R102 | 1-216-065-00 | METAL CHIP | 4.7K | 5% | 1/10W |
| R103 | 1-216-065-00 | METAL CHIP | 4.7K | 5% | 1/10W |
| R104 | 1-216-065-00 | METAL CHIP | 4.7K | 5% | 1/10W |
| R105 | 1-216-081-00 | METAL CHIP | 22K | 5% | 1/10W |
| R106 | 1-216-083-00 | METAL CHIP | 27K | 5% | 1/10W |
| R107 | 1-216-082-00 | METAL CHIP | 24K | 5% | 1/10W |
| R108 | 1-216-082-00 | METAL CHIP | 24K | 5% | 1/10W |
| R109 | 1-216-055-00 | METAL CHIP | 1.8K | 5% | 1/10W |
| R110 | 1-216-089-00 | METAL CHIP | 47K | 5% | 1/10W |
| R111 | 1-216-081-00 | METAL CHIP | 22K | 5% | 1/10W |
| R112 | 1-216-083-00 | METAL CHIP | 27K | 5% | 1/10W |
| R113 | 1-216-082-00 | METAL CHIP | 24K | 5% | 1/10W |
| R114 | 1-216-082-00 | METAL CHIP | 24K | 5% | 1/10W |
| R115 | 1-216-055-00 | METAL CHIP | 1.8K | 5% | 1/10W |
| R116 | 1-216-089-00 | METAL CHIP | 47K | 5% | 1/10W |
| R117 | 1-216-053-00 | METAL CHIP | 1.5K | 5% | 1/10W |
| R118 | 1-216-035-00 | METAL CHIP | 270 | 5% | 1/10W |
| R119 | 1-216-025-00 | METAL CHIP | 100 | 5% | 1/10W |
| R120 | 1-216-025-00 | METAL CHIP | 100 | 5% | 1/10W |

When indicating parts by reference number, please include the board name.

| Ref.No | Part No. | Description | | | | Remark |
|---|---|---|---|---|---|---|
| R121 | 1-216-053-00 | METAL CHIP | 1.5K | 5% | 1/10W | |
| R122 | 1-216-683-11 | METAL CHIP | 22K | 0.50% | 1/16W | |
| R123 | 1-216-684-11 | METAL CHIP | 24K | 0.50% | 1/16W | |
| R126 | 1-216-061-00 | METAL CHIP | 3.3K | 5% | 1/10W | |
| R127 | 1-216-089-00 | METAL CHIP | 47K | 5% | 1/10W | |
| R128 | 1-216-049-00 | METAL CHIP | 1K | 5% | 1/10W | |
| R129 | 1-216-023-00 | METAL CHIP | 82 | 5% | 1/10W | |
| R130 | 1-216-023-00 | METAL CHIP | 82 | 5% | 1/10W | |
| R131 | 1-216-061-00 | METAL CHIP | 3.3K | 5% | 1/10W | |
| R134 | 1-216-097-00 | METAL CHIP | 100K | 5% | 1/10W | |
| R135 | 1-216-097-00 | METAL CHIP | 100K | 5% | 1/10W | |
| R201 | 1-216-065-00 | METAL CHIP | 4.7K | 5% | 1/10W | |
| R202 | 1-216-065-00 | METAL CHIP | 4.7K | 5% | 1/10W | |
| R203 | 1-216-065-00 | METAL CHIP | 4.7K | 5% | 1/10W | |
| R204 | 1-216-065-00 | METAL CHIP | 4.7K | 5% | 1/10W | |
| R205 | 1-216-081-00 | METAL CHIP | 22K | 5% | 1/10W | |
| R206 | 1-216-083-00 | METAL CHIP | 27K | 5% | 1/10W | |
| R207 | 1-216-082-00 | METAL CHIP | 24K | 5% | 1/10W | |
| R208 | 1-216-082-00 | METAL CHIP | 24K | 5% | 1/10W | |
| R209 | 1-216-055-00 | METAL CHIP | 1.8K | 5% | 1/10W | |
| R210 | 1-216-089-00 | METAL CHIP | 47K | 5% | 1/10W | |
| R211 | 1-216-081-00 | METAL CHIP | 22K | 5% | 1/10W | |
| R212 | 1-216-083-00 | METAL CHIP | 27K | 5% | 1/10W | |
| R213 | 1-216-082-00 | METAL CHIP | 24K | 5% | 1/10W | |
| R214 | 1-216-082-00 | METAL CHIP | 24K | 5% | 1/10W | |
| R215 | 1-216-055-00 | METAL CHIP | 1.8K | 5% | 1/10W | |
| R216 | 1-216-089-00 | METAL CHIP | 47K | 5% | 1/10W | |
| R217 | 1-216-053-00 | METAL CHIP | 1.5K | 5% | 1/10W | |
| R218 | 1-216-049-00 | METAL CHIP | 1K | 5% | 1/10W | |
| R219 | 1-216-025-00 | METAL CHIP | 100 | 5% | 1/10W | |
| R220 | 1-216-025-00 | METAL CHIP | 100 | 5% | 1/10W | |
| R221 | 1-216-053-00 | METAL CHIP | 1.5K | 5% | 1/10W | |
| R224 | 1-216-067-00 | METAL CHIP | 5.6K | 5% | 1/10W | |
| R225 | 1-216-067-00 | METAL CHIP | 5.6K | 5% | 1/10W | |
| R229 | 1-216-023-00 | METAL CHIP | 82 | 5% | 1/10W | |
| R230 | 1-216-023-00 | METAL CHIP | 82 | 5% | 1/10W | |
| R231 | 1-216-061-00 | METAL CHIP | 3.3K | 5% | 1/10W | |
| R232 | 1-216-061-00 | METAL CHIP | 3.3K | 5% | 1/10W | |
| R233 | 1-216-061-00 | METAL CHIP | 3.3K | 5% | 1/10W | |
| R234 | 1-216-097-00 | METAL CHIP | 100K | 5% | 1/10W | |
| R235 | 1-216-097-00 | METAL CHIP | 100K | 5% | 1/10W | |
| R301 | 1-216-089-00 | METAL CHIP | 47K | 5% | 1/10W | |
| R302 | 1-216-073-00 | METAL CHIP | 10K | 5% | 1/10W | |
| R303 | 1-216-045-00 | METAL CHIP | 680 | 5% | 1/10W | |
| R304 | 1-216-091-00 | METAL CHIP | 56K | 5% | 1/10W | |
| R305 | 1-216-061-00 | METAL CHIP | 3.3K | 5% | 1/10W | |
| R306 | 1-216-085-00 | METAL CHIP | 33K | 5% | 1/10W | |
| R307 | 1-216-077-00 | METAL CHIP | 15K | 5% | 1/10W | |
| R308 | 1-216-039-00 | METAL CHIP | 390 | 5% | 1/10W | |
| R309 | 1-216-047-00 | METAL CHIP | 820 | 5% | 1/10W | |
| R310 | 1-216-035-00 | METAL CHIP | 270 | 5% | 1/10W | |
| R311 | 1-216-041-00 | METAL CHIP | 470 | 5% | 1/10W | |
| R401 | 1-216-085-00 | METAL CHIP | 33K | 5% | 1/10W | |
| R402 | 1-216-081-00 | METAL CHIP | 22K | 5% | 1/10W | |
| R403 | 1-216-029-00 | METAL CHIP | 150 | 5% | 1/10W | |
| R404 | 1-216-033-00 | METAL CHIP | 220 | 5% | 1/10W | |
| R405 | 1-216-017-00 | METAL CHIP | 47 | 5% | 1/10W | |
| R406 | 1-216-005-00 | METAL CHIP | 15 | 5% | 1/10W | |
| R407 | 1-216-081-00 | METAL CHIP | 22K | 5% | 1/10W | |
| R408 | 1-216-057-00 | METAL CHIP | 2.2K | 5% | 1/10W | |
| R421 | 1-216-295-00 | METAL CHIP | 0 | 5% | 1/10W | |
| R423 | 1-216-295-00 | METAL CHIP | 0 | 5% | 1/10W | |

VARIABLE RESISTOR

| | | | |
|---|---|---|---|
| RV101 | 1-228-920-00 | RES, ADJ, CARBON | 2.2K |
| RV102 | 1-228-920-00 | RES, ADJ, CARBON | 2.2K |
| RV201 | 1-228-920-00 | RES, ADJ, CARBON | 2.2K |
| RV202 | 1-228-920-00 | RES, ADJ, CARBON | 2.2K |

**********

*A-7060-467-A SP-2 BOARD, COMPLETE
**********
(Including the RB-2 board)

CAPACITOR

| | | | | | |
|---|---|---|---|---|---|
| C001 | 1-124-907-00 | ELECT | 10MF | 20% | 50V |
| C002 | 1-163-038-00 | CERAMIC CHIP | 0.1MF | | 25V |
| C003 | 1-163-117-00 | CERAMIC CHIP | 100PF | 5% | 50V |
| C004 | 1-163-117-00 | CERAMIC CHIP | 100PF | 5% | 50V |
| C020 | 1-124-907-00 | ELECT | 10MF | 20% | 50V |
| C021 | 1-163-038-00 | CERAMIC CHIP | 0.1MF | | 25V |
| C022 | 1-163-038-00 | CERAMIC CHIP | 0.1MF | | 25V |
| C023 | 1-163-038-00 | CERAMIC CHIP | 0.1MF | | 25V |
| C024 | 1-163-038-00 | CERAMIC CHIP | 0.1MF | | 25V |
| C025 | 1-124-907-00 | ELECT | 10MF | 20% | 50V |
| C030 | 1-124-907-00 | ELECT | 10MF | 20% | 50V |
| C031 | 1-163-038-00 | CERAMIC CHIP | 0.1MF | | 25V |
| C032 | 1-163-093-00 | CERAMIC CHIP | 10PF | 5% | 50V |
| C033 | 1-163-093-00 | CERAMIC CHIP | 10PF | 5% | 50V |
| C050 | 1-163-038-00 | CERAMIC CHIP | 0.1MF | | 25V |
| C051 | 1-163-038-00 | CERAMIC CHIP | 0.1MF | | 25V |
| C080 | 1-163-101-00 | CERAMIC CHIP | 22PF | 5% | 50V |
| C081 | 1-163-101-00 | CERAMIC CHIP | 22PF | 5% | 50V |
| C082 | 1-131-345-00 | TANTALUM | 0.47MF | 10% | 35V |
| C083 | 1-123-816-00 | ELECT | 10MF | 20% | 50V |
| C084 | 1-163-038-00 | CERAMIC CHIP | 0.1MF | | 25V |
| C085 | 1-163-038-00 | CERAMIC CHIP | 0.1MF | | 25V |
| C086 | 1-163-038-00 | CERAMIC CHIP | 0.1MF | | 25V |
| C120 | 1-163-038-00 | CERAMIC CHIP | 0.1MF | | 25V |
| C121 | 1-163-038-00 | CERAMIC CHIP | 0.1MF | | 25V |
| C122 | 1-163-117-00 | CERAMIC CHIP | 100PF | 5% | 50V |
| C123 | 1-163-117-00 | CERAMIC CHIP | 100PF | 5% | 50V |
| C201 | 1-163-017-00 | CERAMIC CHIP | 0.0047MF | 10% | 50V |
| C202 | 1-124-908-11 | ELECT | 22MF | 20% | 25V |
| C203 | 1-163-035-00 | CERAMIC CHIP | 0.047MF | 10% | 25V |
| C204 | 1-124-249-00 | ELECT | 0.1MF | 20% | 50V |

When indicating parts by reference number, please include the board name.

| Ref.No | Part No. | Description | | Remark |
|---|---|---|---|---|
| C205 | 1-163-038-00 | CERAMIC CHIP 0.1MF | | 25V |
| C206 | 1-124-283-00 | ELECT 4.7MF | 20% | 16V |
| C207 | 1-163-038-00 | CERAMIC CHIP 0.1MF | | 25V |
| C208 | 1-123-613-00 | ELECT 3.3MF | 20% | 50V |
| C209 | 1-124-240-00 | ELECT 10MF | 20% | 25V |
| C210 | 1-124-240-00 | ELECT 10MF | 20% | 25V |
| C211 | 1-124-240-00 | ELECT 10MF | 20% | 25V |
| C212 | 1-124-240-00 | ELECT 10MF | 20% | 25V |
| C213 | 1-124-255-00 | ELECT 1MF | 20% | 50V |
| C214 | 1-124-903-00 | ELECT 1MF | 20% | 50V |
| C215 | 1-124-903-00 | ELECT 1MF | 20% | 50V |
| C216 | 1-124-229-00 | ELECT 33MF | 20% | 10V |
| C217 | 1-124-229-00 | ELECT 33MF | 20% | 10V |
| C218 | 1-124-229-00 | ELECT 33MF | 20% | 10V |
| C219 | 1-163-117-00 | CERAMIC CHIP 100PF | 5% | 50V |
| C220 | 1-163-117-00 | CERAMIC CHIP 100PF | 5% | 50V |
| C221 | 1-124-907-00 | ELECT 10MF | 20% | 50V |
| C222 | 1-163-021-00 | CERAMIC CHIP 0.01MF | | 50V |
| C223 | 1-163-021-00 | CERAMIC CHIP 0.01MF | | 50V |
| C224 | 1-163-021-00 | CERAMIC CHIP 0.01MF | | 50V |
| C225 | 1-163-021-00 | CERAMIC CHIP 0.01MF | | 50V |
| C226 | 1-163-038-00 | CERAMIC CHIP 0.1MF | | 25V |
| C228 | 1-163-021-00 | CERAMIC CHIP 0.01MF | 10% | 50V |
| C229 | 1-124-907-00 | ELECT 10MF | 20% | 50V |
| C230 | 1-163-017-00 | CERAMIC CHIP 0.0047MF | 10% | 50V |
| C231 | 1-163-017-00 | CERAMIC CHIP 0.0047MF | 10% | 50V |
| C232 | 1-163-692-11 | CERAMIC CHIP 0.0015MF | 5% | 50V |
| C233 | 1-163-692-11 | CERAMIC CHIP 0.0015MF | 5% | 50V |
| C234 | 1-163-117-00 | CERAMIC CHIP 100PF | 5% | 50V |
| C235 | 1-163-021-00 | CERAMIC CHIP 0.01MF | | 50V |
| C236 | 1-163-019-00 | CERAMIC CHIP 0.0068MF | 10% | 50V |
| C237 | 1-124-645-11 | ELECT 10MF | 20% | 16V |
| C238 | 1-124-002-11 | ELECT 1MF | 20% | 50V |
| C239 | 1-163-021-00 | CERAMIC CHIP 0.01MF | | 50V |
| C240 | 1-163-033-00 | CERAMIC CHIP 0.022MF | 10% | 25V |
| C241 | 1-163-033-00 | CERAMIC CHIP 0.022MF | 10% | 25V |
| C242 | 1-163-017-00 | CERAMIC CHIP 0.0047MF | 10% | 50V |
| C243 | 1-124-648-00 | ELECT 4.7MF | 20% | 35V |
| C244 | 1-124-907-00 | ELECT 10MF | 20% | 50V |
| C245 | 1-163-038-00 | CERAMIC CHIP 0.1MF | | 25V |
| C246 | 1-163-035-00 | CERAMIC CHIP 0.047MF | 10% | 25V |
| C247 | 1-124-656-00 | ELECT 2.2MF | 20% | 50V |
| C248 | 1-163-021-00 | CERAMIC CHIP 0.01MF | | 50V |
| C249 | 1-124-499-11 | ELECT 1MF | 20% | 50V |
| C250 | 1-163-035-00 | CERAMIC CHIP 0.047MF | 10% | 25V |
| C251 | 1-163-035-00 | CERAMIC CHIP 0.047MF | 10% | 25V |
| C255 | 1-124-445-00 | ELECT 100MF | 20% | 16V |
| C256 | 1-124-445-00 | ELECT 100MF | 20% | 16V |
| C257 | 1-124-927-11 | ELECT 4.7MF | 20% | 50V |
| C258 | 1-124-904-00 | ELECT 2.2MF | 20% | 50V |
| C259 | 1-163-021-00 | CERAMIC CHIP 0.01MF | 10% | 50V |
| C260 | 1-163-021-00 | CERAMIC CHIP 0.01MF | | 50V |
| C261 | 1-163-035-00 | CERAMIC CHIP 0.047MF | 10% | 25V |

| Ref.No | Part No. | Description | | Remark |
|---|---|---|---|---|
| C262 | 1-163-035-00 | CERAMIC CHIP 0.047MF | 10% | 25V |
| C264 | 1-163-109-00 | CERAMIC CHIP 47PF | 5% | 50V |
| C490 | 1-101-006-00 | CERAMIC CHIP 0.047MF | | 50V |
| C491 | 1-101-006-00 | CERAMIC CHIP 0.047MF | | 50V |
| C492 | 1-163-059-00 | CERAMIC CHIP 0.01 | 10% | 50V |
| C500 | 1-163-035-00 | CERAMIC CHIP 0.047MF | | 50V |
| C501 | 1-163-035-00 | CERAMIC CHIP 0.047MF | | 50V |
| C502 | 1-163-131-00 | CERAMIC CHIP 390PF | 10% | 50V |
| C600 | 1-163-035-00 | CERAMIC CHIP 0.047MF | | 50V |
| C601 | 1-163-035-00 | CERAMIC CHIP 0.047MF | 10% | 25V |
| C602 | 1-123-617-00 | ELECT 10MF | 20% | 16V |
| C603 | 1-163-035-00 | CERAMIC CHIP 0.047MF | | 50V |
| C604 | 1-163-035-00 | CERAMIC CHIP 0.047MF | | 50V |
| C605 | 1-163-109-00 | CERAMIC CHIP 47PF | 5% | 50V |
| C606 | 1-163-101-00 | CERAMIC CHIP 22PF | 5% | 50V |
| C607 | 1-163-109-00 | CERAMIC CHIP 47PF | 5% | 50V |
| C608 | 1-163-035-00 | CERAMIC CHIP 0.047MF | | 50V |
| C609 | 1-163-035-00 | CERAMIC CHIP 0.047MF | | 50V |
| C610 | 1-163-035-00 | CERAMIC CHIP 0.047MF | | 50V |
| C611 | 1-123-617-00 | ELECT 10MF | 20% | 16V |
| C612 | 1-163-035-00 | CERAMIC CHIP 0.047MF | | 50V |
| C613 | 1-163-017-00 | CERAMIC CHIP 0.0047MF | 10% | 50V |
| C614 | 1-123-617-00 | ELECT 10MF | 20% | 16V |
| C615 | 1-163-035-00 | CERAMIC CHIP 0.047MF | | 50V |
| C616 | 1-123-610-00 | ELECT 0.47MF | 20% | 50V |
| C617 | 1-124-258-00 | ELECT 3.3MF | 20% | 50V |
| C618 | 1-124-239-00 | ELECT 6.8MF | 20% | 10V |
| C619 | 1-163-101-00 | CERAMIC CHIP 22PF | 5% | 50V |
| C620 | 1-163-035-00 | CERAMIC CHIP 0.047MF | | 50V |
| C621 | 1-163-099-00 | CERAMIC CHIP 18PF | 5% | 50V |
| C624 | 1-163-085-00 | CERAMIC CHIP 2PF | 0.25PF | 50V |
| C627 | 1-163-101-00 | CERAMIC CHIP 22PF | 5% | 50V |
| C628 | 1-163-035-00 | CERAMIC CHIP 0.047MF | | 50V |
| C629 | 1-123-617-00 | ELECT 10MF | 20% | 16V |
| C630 | 1-163-035-00 | CERAMIC CHIP 0.047MF | | 50V |
| C632 | 1-163-035-00 | CERAMIC CHIP 0.047MF | | 50V |
| C633 | 1-163-035-00 | CERAMIC CHIP 0.047MF | | 50V |
| C634 | 1-163-035-00 | CERAMIC CHIP 0.047MF | | 50V |
| C635 | 1-123-617-00 | ELECT 10MF | 20% | 16V |
| C636 | 1-163-035-00 | CERAMIC CHIP 0.047MF | | 50V |
| C637 | 1-163-035-00 | CERAMIC CHIP 0.047MF | | 50V |
| C638 | 1-163-035-00 | CERAMIC CHIP 0.047MF | | 50V |
| C639 | 1-123-617-00 | ELECT 10MF | 20% | 16V |
| C645 | 1-163-035-00 | CERAMIC CHIP 0.047MF | | 50V |
| C646 | 1-163-035-00 | CERAMIC CHIP 0.047MF | | 50V |
| C647 | 1-163-035-00 | CERAMIC CHIP 0.047MF | | 50V |
| C648 | 1-163-035-00 | CERAMIC CHIP 0.047MF | | 50V |
| C649 | 1-163-035-00 | CERAMIC CHIP 0.047MF | | 50V |
| C650 | 1-163-035-00 | CERAMIC CHIP 0.047MF | | 50V |
| C651 | 1-163-035-00 | CERAMIC CHIP 0.047MF | | 50V |
| C652 | 1-163-035-00 | CERAMIC CHIP 0.047MF | | 50V |
| C653 | 1-163-035-00 | CERAMIC CHIP 0.047MF | | 50V |
| C654 | 1-163-035-00 | CERAMIC CHIP 0.047MF | | 50V |
| C701 | 1-163-021-00 | CERAMIC CHIP 0.01MF | 10% | 50V |
| C702 | 1-163-035-00 | CERAMIC CHIP 0.047MF | 10% | 25V |
| C703 | 1-163-141-00 | CERAMIC CHIP 0.001MF | 5% | 50V |

When indicating parts by reference number, please include the board name.

| Ref.No | Part No. | Description | | | Remark |
|---|---|---|---|---|---|
| C704 | 1-163-021-00 | CERAMIC CHIP | 0.01MF | 10% 50V | |
| C705 | 1-163-033-00 | CERAMIC CHIP | 0.022MF | 10% 25V | |
| C706 | 1-163-033-00 | CERAMIC CHIP | 0.022MF | 10% 25V | |
| C707 | 1-124-908-11 | ELECT | 22MF | 20% 25V | |
| C708 | 1-163-017-00 | CERAMIC CHIP | 0.0047MF | 10% 50V | |
| C709 | 1-163-035-00 | CERAMIC CHIP | 0.047MF | 10% 25V | |
| C710 | 1-124-256-00 | ELECT | 1.5MF | 20% 50V | |
| C711 | 1-163-034-00 | CERAMIC CHIP | 0.033MF | 10% 25V | |
| C712 | 1-163-105-00 | CERAMIC CHIP | 33PF | 5% 50V | |
| C713 | 1-163-123-00 | CERAMIC CHIP | 180PF | 5% 50V | |
| C714 | 1-163-271-00 | CERAMIC CHIP | 680PF | 5% 50V | |
| C715 | 1-163-038-00 | CERAMIC CHIP | 0.1MF | 25V | |
| C716 | 1-163-038-00 | CERAMIC CHIP | 0.1MF | 25V | |
| C717 | 1-163-038-00 | CERAMIC CHIP | 0.1MF | 25V | |
| C718 | 1-163-021-00 | CERAMIC CHIP | 0.01MF | 50V | |
| C719 | 1-124-904-00 | ELECT | 2.2MF | 20% 50V | |
| C720 | 1-163-038-00 | CERAMIC CHIP | 0.1MF | 25V | |
| C721 | 1-163-145-00 | CERAMIC CHIP | 0.0015MF | 5% 50V | |
| C722 | 1-163-101-00 | CERAMIC CHIP | 22PF | 5% 50V | |
| C723 | 1-163-021-00 | CERAMIC CHIP | 0.01MF | 10% 50V | |
| C724 | 1-163-141-00 | CERAMIC CHIP | 0.001MF | 5% 50V | |
| C725 | 1-163-111-00 | CERAMIC CHIP | 56PF | 5% 50V | |
| C726 | 1-163-133-00 | CERAMIC CHIP | 470PF | 5% 50V | |
| C727 | 1-163-021-00 | CERAMIC CHIP | 0.01MF | 50V | |
| C728 | 1-124-904-00 | ELECT | 2.2MF | 20% 50V | |
| C729 | 1-163-038-00 | CERAMIC CHIP | 0.1MF | 25V | |
| C730 | 1-163-123-00 | CERAMIC CHIP | 180PF | 5% 50V | |
| C731 | 1-163-121-00 | CERAMIC CHIP | 150PF | 5% 50V | |
| C732 | 1-163-265-91 | CERAMIC CHIP | 390PF | 5% 50V | |
| C733 | 1-163-111-00 | CERAMIC CHIP | 56PF | 5% 50V | |
| C734 | 1-163-268-00 | CERAMIC CHIP | 510PF | 5% 50V | |
| C735 | 1-163-035-00 | CERAMIC CHIP | 0.047MF | 10% 25V | |
| C736 | 1-163-021-00 | CERAMIC CHIP | 0.01MF | 10% 50V | |
| C740 | 1-124-904-00 | ELECT | 2.2MF | 20% 50V | |

CONNECTOR

| | | | |
|---|---|---|---|
| CN001 | *1-564-006-11 | PIN, CONNECTOR 7P | |
| CN002 | *1-564-006-11 | PIN, CONNECTOR 7P | |
| CN003 | *1-564-003-00 | PIN, CONNECTOR 4P | |
| CN004 | *1-564-001-11 | PIN, CONNECTOR 2P | |
| CN005 | *1-564-004-00 | PIN, CONNECTOR 5P | |
| CN006 | *1-564-002-00 | PIN, CONNECTOR 3P | |
| CN007 | *1-564-004-00 | PIN, CONNECTOR 5P | |
| CN008 | *1-564-001-11 | PIN, CONNECTOR 2P | |
| CN009 | *1-564-006-11 | PIN, CONNECTOR 7P | |
| CN010 | *1-564-001-11 | PIN, CONNECTOR 2P | |
| CN011 | *1-564-004-00 | PIN, CONNECTOR 5P | |
| CN012 | *1-564-006-11 | PIN, CONNECTOR 7P | |
| CN013 | *1-564-002-00 | PIN, CONNECTOR 3P | |
| CN014 | *1-564-003-00 | PIN, CONNECTOR 4P | |
| CN015 | *1-564-002-00 | PIN, CONNECTOR 3P | |
| CN016 | *1-564-001-11 | PIN, CONNECTOR 2P | |
| CN017 | *1-564-001-11 | PIN, CONNECTOR 2P | |
| CN018 | *1-564-002-00 | PIN, CONNECTOR 3P | |
| CN019 | *1-564-001-11 | PIN, CONNECTOR 2P | |
| CN020 | *1-564-005-00 | PIN, CONNECTOR 6P | |
| CN021 | *1-564-004-00 | PIN, CONNECTOR 5P | |
| CN022 | *1-564-001-11 | PIN, CONNECTOR 2P | |
| CN207 | *1-564-001-11 | PIN, CONNECTOR 2P | |
| CN212 | *1-564-010-11 | PIN, CONNECTOR 11P | |
| CN213 | *1-564-014-00 | PIN, CONNECTOR 4P | |
| CN214 | *1-564-005-00 | PIN, CONNECTOR 6P | |
| CN215 | *1-564-005-00 | PIN, CONNECTOR 6P | |
| CN216 | *1-564-006-11 | PIN, CONNECTOR 7P | |
| CN217 | *1-564-002-00 | PIN, CONNECTOR 3P | |
| CN601 | *1-564-006-11 | PIN, CONNECTOR 7P | |
| CN603 | *1-564-015-00 | PIN, CONNECTOR 5P | |
| CN605 | *1-564-007-00 | PIN, CONNECTOR 8P | |
| CN606 | *1-564-001-11 | PIN, CONNECTOR 2P | |
| CN607 | *1-564-002-00 | PIN, CONNECTOR 3P | |

DIODE

| | | |
|---|---|---|
| D020 | 8-719-101-23 | DIODE 1SS123 |
| D021 | 8-719-101-23 | DIODE 1SS123 |
| D060 | 8-719-911-19 | DIODE 1SS119 |
| D080 | 8-719-100-03 | DIODE 1S2835 |
| D081 | 8-719-100-03 | DIODE 1S2835 |
| D082 | 8-719-100-05 | DIODE 1S2837 |
| D106 | 8-719-106-71 | DIODE RD12M-B2 |
| D107 | 8-719-106-71 | DIODE RD12M-B2 |
| D108 | 8-719-106-71 | DIODE RD12M-B2 |
| D120 | 8-719-100-03 | DIODE 1S2835 |
| D203 | 8-719-200-27 | DIODE E10DS2 |
| D204 | 8-719-100-03 | DIODE 1S2835 |
| D205 | 8-719-801-48 | DIODE 1SS193 |
| D206 | 8-719-100-03 | DIODE 1S2835 |
| D208 | 8-719-100-03 | DIODE 1S2835 |
| D209 | 8-719-100-05 | DIODE 1S2837 |
| D211 | 8-719-101-23 | DIODE 1SS123 |
| D212 | 8-719-100-03 | DIODE 1S2835 |
| D213 | 8-719-100-03 | DIODE 1S2835 |
| D214 | 8-719-100-03 | DIODE 1S2835 |
| D215 | 8-719-101-23 | DIODE 1SS123 |
| D216 | 8-719-101-23 | DIODE 1SS123 |
| D217 | 8-719-801-48 | DIODE 1SS193 |
| D218 | 8-719-100-05 | DIODE 1S2837 |
| D220 | 8-719-200-27 | DIODE E10DS2 |
| D221 | 8-719-200-27 | DIODE E10DS2 |
| D222 | 8-719-200-27 | DIODE E10DS2 |
| D223 | 8-719-100-05 | DIODE 1S2837 |
| D225 | 8-719-801-48 | DIODE 1SS193 |
| D226 | 8-719-100-03 | DIODE 1S2835 |
| D227 | 8-719-801-48 | DIODE 1SS193 |
| D230 | 8-719-105-82 | DIODE RD5.1M |
| D231 | 8-719-801-48 | DIODE 1SS193 |
| D232 | 8-719-101-23 | DIODE 1SS123 |

When indicating parts by reference number, please include the board name.

| Ref.No | Part No. | Description | Remark |
|---|---|---|---|
| D233 | 8-719-801-48 | DIODE 1SS193 | |
| D390 | 8-719-100-05 | DIODE 1S2837 | |
| D391 | 8-719-100-03 | DIODE 1S2835 | |
| D392 | 8-719-801-48 | DIODE 1SS193 | |
| D393 | 8-719-100-05 | DIODE 1S2837 | |
| D501 | 8-719-118-29 | DIODE 1SS220 | |
| D502 | 8-719-100-05 | DIODE 1S2837 | |
| D600 | 8-719-108-24 | DIODE 1SS223 | |
| D601 | 8-719-100-05 | DIODE 1S2837 | |
| D603 | 8-719-100-03 | DIODE 1S2835 | |
| D604 | 8-719-100-05 | DIODE 1S2837 | |
| D701 | 8-719-100-05 | DIODE 1S2837 | |
| D702 | 8-719-100-03 | DIODE 1S2835 | |
| | | FILTER | |
| FL701 | 1-235-829-11 | BPF (15KHz) | |
| FL702 | 1-235-830-11 | BPF (45KHz) | |
| | | IC | |
| IC001 | 8-752-800-76 | IC CXP5048H-069Q | |
| IC002 | 8-752-800-91 | IC CXP5048H-070Q | |
| IC003 | 8-759-112-01 | IC UPD75104G-519-1B | |
| IC004 | 8-759-201-01 | IC TC4066BF | |
| IC005 | 8-759-201-61 | IC TC40H004F | |
| IC007 | 8-759-801-60 | IC LB1640N | |
| IC008 | 8-759-913-67 | IC MB3763P | |
| IC009 | 8-759-908-81 | IC MB3763PF | |
| IC010 | 8-759-920-94 | IC MSM6411B-19RS | |
| IC011 | 8-759-200-68 | IC TC4011BF | |
| IC012 | 8-759-201-53 | IC TC40H000F | |
| IC120 | 8-759-111-62 | IC UPD7566G-506 | |
| IC121 | 8-759-920-94 | IC MSM6411B-19RS | |
| IC201 | 8-759-803-47 | IC LA5005M | |
| IC202 | 8-759-100-94 | IC UPC358G2 | |
| IC204 | 8-759-929-55 | IC MB64H428PF | |
| IC205 | 8-759-932-07 | IC MB674101PF | |
| IC206 | 8-759-701-43 | IC NJM3414D | |
| IC207 | 8-759-202-45 | IC CX20114 | |
| IC208 | 8-759-802-79 | IC LB1616M | |
| IC209 | 8-759-100-94 | IC UPC358G2 | |
| IC210 | 8-752-003-50 | IC CX20035 | |
| IC211 | 8-759-925-66 | IC BA6303F | |
| IC212 | 8-759-701-39 | IC NJM3403AM | |
| IC213 | 8-759-201-01 | IC TC4066BF | |
| IC214 | 8-759-201-00 | IC TC4052BF | |
| IC215 | 8-759-100-94 | IC UPC358G2 | |
| IC216 | 8-759-200-81 | IC TC4053BF | |
| IC217 | 8-759-200-81 | IC TC4053BF | |
| IC218 | 8-759-200-81 | IC TC4053BF | |
| IC219 | 8-759-100-94 | IC UPC358G2 | |
| IC220 | 8-759-200-90 | IC TC4538BF | |
| IC500 | 8-759-111-96 | IC UPD75106G-518-1B | |
| IC501 | 8-759-200-81 | IC TC4053BF | |

| Ref.No | Part No. | Description | Remark |
|---|---|---|---|
| IC502 | 8-759-200-78 | IC TC4030BF | |
| IC600 | 8-752-010-20 | IC CX20102 | |
| IC601 | 8-752-321-97 | IC CXD1066Q | |
| IC602 | 8-759-911-18 | IC CX23011 | |
| IC603 | 8-759-927-98 | IC MB8464-15LPF | |
| IC604 | 8-759-911-19 | IC CX23012 | |
| IC605 | 8-752-010-30 | IC CX20103 | |
| IC606 | 8-759-915-30 | IC CX23078 | |
| IC701 | 8-759-928-56 | IC CXA1042M | |
| IC703 | 8-759-193-24 | IC UPC324G2 | |
| | | JACK | |
| J101 | 1-507-678-21 | JACK | |
| J102 | 1-507-678-21 | JACK | |
| J103 | 1-562-732-11 | SOCKET 5P | |
| | | COIL | |
| L601 | 1-408-421-00 | MICRO INDUCTOR 100UH | |
| L602 | 1-408-421-00 | MICRO INDUCTOR 100UH | |
| L603 | 1-408-421-00 | MICRO INDUCTOR 100UH | |
| L604 | 1-408-421-00 | MICRO INDUCTOR 100UH | |
| L605 | 1-408-421-00 | MICRO INDUCTOR 100UH | |
| L606 | 1-408-421-00 | MICRO INDUCTOR 100UH | |
| L607 | 1-408-421-00 | MICRO INDUCTOR 100UH | |
| L608 | 1-408-421-00 | MICRO INDUCTOR 100UH | |
| L609 | 1-408-421-00 | MICRO INDUCTOR 100UH | |
| L610 | 1-408-421-00 | MICRO INDUCTOR 100UH | |
| L611 | 1-408-421-00 | MICRO INDUCTOR 100UH | |
| | | IC LINK | |
| PS001⚠ | 1-532-727-11 | LINK, IC (ICP-N5) | |
| PS003⚠ | 1-532-685-00 | LINK, IC (ICP-N20) | |
| PS004⚠ | 1-532-637-00 | LINK, IC (ICP-N25) | |
| PS201⚠ | 1-532-685-00 | LINK, IC (ICP-N20) | |
| | | TRANSISTOR | |
| Q010 | 8-729-901-01 | TRANSISTOR DTC144EK | |
| Q011 | 8-729-901-01 | TRANSISTOR DTC144EK | |
| Q012 | 8-729-901-01 | TRANSISTOR DTC144EK | |
| Q013 | 8-729-901-01 | TRANSISTOR DTC144EK | |
| Q014 | 8-729-901-01 | TRANSISTOR DTC144EK | |
| Q015 | 8-729-901-06 | TRANSISTOR DTA144EK | |
| Q020 | 8-729-901-05 | TRANSISTOR DTA124EK | |
| Q021 | 8-729-901-01 | TRANSISTOR DTC144EK | |
| Q022 | 8-729-901-05 | TRANSISTOR DTA124EK | |
| Q023 | 8-729-199-92 | TRANSISTOR 2SD999 | |
| Q054 | 8-729-901-01 | TRANSISTOR DTC144EK | |
| Q055 | 8-729-901-01 | TRANSISTOR DTC144EK | |
| Q060 | 8-729-901-06 | TRANSISTOR DTA144EK | |
| Q070 | 8-729-901-01 | TRANSISTOR DTC144EK | |
| Q071 | 8-729-374-02 | TRANSISTOR 2SB740 | |
| Q080 | 8-729-901-01 | TRANSISTOR DTC144EK | |
| Q081 | 8-729-901-01 | TRANSISTOR DTC144EK | |

The components identified by shading and mark ⚠ are critical for safety. Replace only with part number specified.

When indicating parts by reference number, please include the board name.

| Ref.No | Part No. | Description | Remark |
|---|---|---|---|
| Q082 | 8-729-901-01 | TRANSISTOR DTC144EK | |
| Q083 | 8-729-100-67 | TRANSISTOR 2SC1623-L7 | |
| Q084 | 8-729-901-01 | TRANSISTOR DTC144EK | |
| Q085 | 8-729-901-01 | TRANSISTOR DTC144EK | |
| Q086 | 8-729-100-76 | TRANSISTOR 2SA812 | |
| Q087 | 8-729-901-01 | TRANSISTOR DTC144EK | |
| Q088 | 8-729-100-76 | TRANSISTOR 2SA812 | |
| Q090 | 8-729-901-01 | TRANSISTOR DTC144EK | |
| Q091 | 8-729-901-01 | TRANSISTOR DTC144EK | |
| Q103 | 8-729-901-06 | TRANSISTOR DTA144EK | |
| Q120 | 8-729-901-01 | TRANSISTOR DTC144EK | |
| Q121 | 8-729-901-01 | TRANSISTOR DTC144EK | |
| Q122 | 8-729-901-01 | TRANSISTOR DTC144EK | |
| Q123 | 8-729-901-01 | TRANSISTOR DTC144EK | |
| Q201 | 8-729-901-04 | TRANSISTOR DTA114EK | |
| Q202 | 8-729-900-53 | TRANSISTOR DTC114EK | |
| Q203 | 8-729-201-78 | TRANSISTOR 2SD1406 | |
| Q204 | 8-729-100-67 | TRANSISTOR 2SC1623-L7 | |
| Q205 | 8-729-100-66 | TRANSISTOR 2SC1623 | |
| Q206 | 8-729-804-67 | TRANSISTOR 2SB1133-R | |
| Q207 | 8-729-901-06 | TRANSISTOR DTA144EK | |
| Q208 | 8-729-100-76 | TRANSISTOR 2SA812 | |
| Q209 | 8-729-201-78 | TRANSISTOR 2SD1406 | |
| Q210 | 8-729-901-01 | TRANSISTOR DTC144EK | |
| Q211 | 8-729-901-01 | TRANSISTOR DTC144EK | |
| Q212 | 8-729-105-29 | TRANSISTOR 2SA1385 | |
| Q213 | 8-729-100-67 | TRANSISTOR 2SC1623-L7 | |
| Q214 | 8-729-901-01 | TRANSISTOR DTC144EK | |
| Q215 | 8-729-901-01 | TRANSISTOR DTC144EK | |
| Q216 | 8-729-901-01 | TRANSISTOR DTC144EK | |
| Q217 | 8-729-901-01 | TRANSISTOR DTC144EK | |
| Q218 | 8-729-113-33 | TRANSISTOR 2SB733-4 | |
| Q219 | 8-729-113-33 | TRANSISTOR 2SB733-4 | |
| Q220 | 8-729-100-76 | TRANSISTOR 2SA812 | |
| Q221 | 8-729-100-76 | TRANSISTOR 2SA812 | |
| Q222 | 8-729-177-33 | TRANSISTOR 2SD773-4 | |
| Q223 | 8-729-100-67 | TRANSISTOR 2SC1623-L7 | |
| Q224 | 8-729-177-33 | TRANSISTOR 2SD773-4 | |
| Q225 | 8-729-100-67 | TRANSISTOR 2SC1623-L7 | |
| Q226 | 8-729-901-01 | TRANSISTOR DTC144EK | |
| Q227 | 8-729-901-06 | TRANSISTOR DTA144EK | |
| Q228 | 8-729-901-01 | TRANSISTOR DTC144EK | |
| Q229 | 8-729-901-06 | TRANSISTOR DTA144EK | |
| Q230 | 8-729-901-01 | TRANSISTOR DTC144EK | |
| Q232 | 8-729-901-06 | TRANSISTOR DTA144EK | |
| Q233 | 8-729-901-01 | TRANSISTOR DTC144EK | |
| Q235 | 8-729-901-01 | TRANSISTOR DTC144EK | |
| Q236 | 8-729-901-01 | TRANSISTOR DTC144EK | |
| Q237 | 8-729-901-06 | TRANSISTOR DTA144EK | |
| Q238 | 8-729-901-01 | TRANSISTOR DTC144EK | |
| Q239 | 8-729-901-01 | TRANSISTOR DTC144EK | |
| Q240 | 8-729-901-01 | TRANSISTOR DTC144EK | |
| Q242 | 8-729-901-01 | TRANSISTOR DTC144EK | |
| Q243 | 8-729-901-01 | TRANSISTOR DTC144EK | |
| Q244 | 8-729-901-01 | TRANSISTOR DTC144EK | |
| Q245 | 8-729-901-06 | TRANSISTOR DTA144EK | |
| Q246 | 8-729-901-01 | TRANSISTOR DTC144EK | |
| Q248 | 8-729-901-01 | TRANSISTOR DTC144EK | |
| Q249 | 8-729-901-06 | TRANSISTOR DTA144EK | |
| Q250 | 8-729-100-67 | TRANSISTOR 2SC1623-L7 | |
| Q251 | 8-729-100-67 | TRANSISTOR 2SC1623-L7 | |
| Q252 | 8-729-100-76 | TRANSISTOR 2SA812 | |
| Q253 | 8-729-100-76 | TRANSISTOR 2SA812 | |
| Q254 | 8-729-901-01 | TRANSISTOR DTC144EK | |
| Q256 | 8-729-901-01 | TRANSISTOR DTC144EK | |
| Q257 | 8-729-901-06 | TRANSISTOR DTA144EK | |
| Q258 | 8-729-901-06 | TRANSISTOR DTA144EK | |
| Q260 | 8-729-199-92 | TRANSISTOR 2SD999 | |
| Q261 | 8-729-199-92 | TRANSISTOR 2SD999 | |
| Q262 | 8-729-199-92 | TRANSISTOR 2SD999 | |
| Q263 | 8-729-901-06 | TRANSISTOR DTA144EK | |
| Q264 | 8-729-901-04 | TRANSISTOR DTA114EK | |
| Q280 | 8-729-100-67 | TRANSISTOR 2SC1623-L7 | |
| Q281 | 8-729-901-01 | TRANSISTOR DTC144EK | |
| Q282 | 8-729-901-01 | TRANSISTOR DTC144EK | |
| Q390 | 8-729-901-01 | TRANSISTOR DTC144EK | |
| Q401 | 8-729-901-01 | TRANSISTOR DTC144EK | |
| Q480 | 8-729-900-89 | TRANSISTOR DTC144ES | |
| Q481 | 8-729-900-89 | TRANSISTOR DTC144ES | |
| Q482 | 8-729-900-89 | TRANSISTOR DTC144ES | |
| Q500 | 8-729-901-01 | TRANSISTOR DTC144EK | |
| Q501 | 8-729-901-01 | TRANSISTOR DTC144EK | |
| Q502 | 8-729-901-01 | TRANSISTOR DTC144EK | |
| Q601 | 8-729-100-67 | TRANSISTOR 2SC1623-L7 | |
| Q602 | 8-729-901-01 | TRANSISTOR DTC144EK | |
| Q604 | 8-729-901-06 | TRANSISTOR DTA144EK | |
| Q605 | 8-729-901-01 | TRANSISTOR DTC144EK | |
| Q606 | 8-729-901-01 | TRANSISTOR DTC144EK | |
| Q701 | 8-729-100-67 | TRANSISTOR 2SC1623-L7 | |
| Q702 | 8-729-100-67 | TRANSISTOR 2SC1623-L7 | |
| Q703 | 8-729-901-01 | TRANSISTOR DTC144EK | |
| Q704 | 8-729-100-76 | TRANSISTOR 2SA812 | |
| Q705 | 8-729-100-67 | TRANSISTOR 2SC1623-L7 | |
| Q706 | 8-729-100-67 | TRANSISTOR 2SC1623-L7 | |
| Q707 | 8-729-100-67 | TRANSISTOR 2SC1623-L7 | |
| Q708 | 8-729-100-67 | TRANSISTOR 2SC1623-L7 | |
| Q709 | 8-729-100-76 | TRANSISTOR 2SA812 | |
| Q710 | 8-729-100-67 | TRANSISTOR 2SC1623-L7 | |
| Q711 | 8-729-100-67 | TRANSISTOR 2SC1623-L7 | |
| Q712 | 8-729-901-01 | TRANSISTOR DTC144EK | |
| Q713 | 8-729-100-67 | TRANSISTOR 2SC1623-L7 | |
| Q714 | 8-729-901-01 | TRANSISTOR DTC144EK | |
| Q715 | 8-729-100-76 | TRANSISTOR 2SA812 | |
| Q716 | 8-729-100-67 | TRANSISTOR 2SC1623-L7 | |
| Q717 | 8-729-901-01 | TRANSISTOR DTC144EK | |

RESISTOR

| | | | | | |
|---|---|---|---|---|---|
| R001 | 1-216-073-00 | METAL CHIP | 10K | 5% | 1/10W |
| R002 | 1-216-073-00 | METAL CHIP | 10K | 5% | 1/10W |

When indicating parts by reference number, please include the board name.

| Ref.No | Part No. | Description | | | | Remark |
|---|---|---|---|---|---|---|
| R003 | 1-216-073-00 | METAL CHIP | 10K | 5% | 1/10W | |
| R004 | 1-216-073-00 | METAL CHIP | 10K | 5% | 1/10W | |
| R005 | 1-216-073-00 | METAL CHIP | 10K | 5% | 1/10W | |
| R006 | 1-216-073-00 | METAL CHIP | 10K | 5% | 1/10W | |
| R007 | 1-216-073-00 | METAL CHIP | 10K | 5% | 1/10W | |
| R008 | 1-216-073-00 | METAL CHIP | 10K | 5% | 1/10W | |
| R010 | 1-216-073-00 | METAL CHIP | 10K | 5% | 1/10W | |
| R011 | 1-216-073-00 | METAL CHIP | 10K | 5% | 1/10W | |
| R012 | 1-216-073-00 | METAL CHIP | 10K | 5% | 1/10W | |
| R013 | 1-216-081-00 | METAL CHIP | 22K | 5% | 1/10W | |
| R014 | 1-216-061-00 | METAL CHIP | 3.3K | 5% | 1/10W | |
| R015 | 1-216-081-00 | METAL CHIP | 22K | 5% | 1/10W | |
| R016 | 1-216-073-00 | METAL CHIP | 10K | 5% | 1/10W | |
| R018 | 1-216-073-00 | METAL CHIP | 10K | 5% | 1/10W | |
| R019 | 1-216-073-00 | METAL CHIP | 10K | 5% | 1/10W | |
| R020 | 1-216-073-00 | METAL CHIP | 10K | 5% | 1/10W | |
| R021 | 1-216-295-00 | METAL CHIP | 0 | 5% | 1/10W | |
| R022 | 1-216-073-00 | METAL CHIP | 10K | 5% | 1/10W | |
| R023 | 1-216-073-00 | METAL CHIP | 10K | 5% | 1/10W | |
| R024 | 1-216-041-00 | METAL CHIP | 470 | 5% | 1/10W | |
| R025 | 1-216-073-00 | METAL CHIP | 10K | 5% | 1/10W | |
| R026 | 1-216-073-00 | METAL CHIP | 10K | 5% | 1/10W | |
| R027 | 1-216-073-00 | METAL CHIP | 10K | 5% | 1/10W | |
| R028 | 1-216-073-00 | METAL CHIP | 10K | 5% | 1/10W | |
| R029 | 1-216-073-00 | METAL CHIP | 10K | 5% | 1/10W | |
| R030 | 1-216-073-00 | METAL CHIP | 10K | 5% | 1/10W | |
| R031 | 1-216-073-00 | METAL CHIP | 10K | 5% | 1/10W | |
| R032 | 1-216-073-00 | METAL CHIP | 10K | 5% | 1/10W | |
| R033 | 1-216-073-00 | METAL CHIP | 10K | 5% | 1/10W | |
| R034 | 1-216-073-00 | METAL CHIP | 10K | 5% | 1/10W | |
| R039 | 1-216-073-00 | METAL CHIP | 10K | 5% | 1/10W | |
| R040 | 1-216-295-00 | METAL CHIP | 0 | 5% | 1/10W | |
| R050 | 1-216-073-00 | METAL CHIP | 10K | 5% | 1/10W | |
| R051 | 1-216-073-00 | METAL CHIP | 10K | 5% | 1/10W | |
| R052 | 1-216-073-00 | METAL CHIP | 10K | 5% | 1/10W | |
| R058 | 1-216-073-00 | METAL CHIP | 10K | 5% | 1/10W | |
| R070 | 1-216-081-00 | METAL CHIP | 22K | 5% | 1/10W | |
| R071 | 1-216-051-00 | METAL CHIP | 1.2K | 5% | 1/10W | |
| R072 | 1-247-712-11 | CARBON | 820 | 5% | 1/4W | |
| R073 | 1-249-447-11 | CARBON | 1 | 5% | 1/4W | |
| R079 | 1-216-097-00 | METAL CHIP | 100K | 5% | 1/10W | |
| R080 | 1-216-001-00 | METAL CHIP | 10 | 5% | 1/10W | |
| R081 | 1-216-081-00 | METAL CHIP | 22K | 5% | 1/10W | |
| R082 | 1-216-065-00 | METAL CHIP | 4.7K | 5% | 1/10W | |
| R083 | 1-216-049-00 | METAL CHIP | 1K | 5% | 1/10W | |
| R084 | 1-216-025-00 | METAL CHIP | 100 | 5% | 1/10W | |
| R085 | 1-216-073-00 | METAL CHIP | 10K | 5% | 1/10W | |
| R086 | 1-216-097-00 | METAL CHIP | 100K | 5% | 1/10W | |
| R087 | 1-216-073-00 | METAL CHIP | 10K | 5% | 1/10W | |
| R088 | 1-216-089-00 | METAL CHIP | 47K | 5% | 1/10W | |
| R089 | 1-216-073-00 | METAL CHIP | 10K | 5% | 1/10W | |
| R090 | 1-216-073-00 | METAL CHIP | 10K | 5% | 1/10W | |
| R097 | 1-216-113-00 | METAL CHIP | 470K | 5% | 1/10W | |
| R098 | 1-216-113-00 | METAL CHIP | 470K | 5% | 1/10W | |
| R099 | 1-216-073-00 | METAL CHIP | 10K | 5% | 1/10W | |
| R100 | 1-216-025-00 | METAL CHIP | 100 | 5% | 1/10W | |
| R101 | 1-216-073-00 | METAL CHIP | 10K | 5% | 1/10W | |
| R102 | 1-216-097-00 | METAL CHIP | 100K | 5% | 1/10W | |
| R106 | 1-216-065-00 | METAL CHIP | 4.7K | 5% | 1/10W | |
| R120 | 1-216-073-00 | METAL CHIP | 10K | 5% | 1/10W | |
| R121 | 1-216-073-00 | METAL CHIP | 10K | 5% | 1/10W | |
| R123 | 1-216-073-00 | METAL CHIP | 10K | 5% | 1/10W | |
| R151 | 1-216-073-00 | METAL CHIP | 10K | 5% | 1/10W | |
| R152 | 1-216-073-00 | METAL CHIP | 10K | 5% | 1/10W | |
| R153 | 1-216-073-00 | METAL CHIP | 10K | 5% | 1/10W | |
| R154 | 1-216-073-00 | METAL CHIP | 10K | 5% | 1/10W | |
| R155 | 1-216-073-00 | METAL CHIP | 10K | 5% | 1/10W | |
| R156 | 1-216-073-00 | METAL CHIP | 10K | 5% | 1/10W | |
| R157 | 1-216-073-00 | METAL CHIP | 10K | 5% | 1/10W | |
| R158 | 1-216-073-00 | METAL CHIP | 10K | 5% | 1/10W | |
| R160 | 1-216-073-00 | METAL CHIP | 10K | 5% | 1/10W | |
| R161 | 1-216-073-00 | METAL CHIP | 10K | 5% | 1/10W | |
| R162 | 1-216-073-00 | METAL CHIP | 10K | 5% | 1/10W | |
| R163 | 1-216-073-00 | METAL CHIP | 10K | 5% | 1/10W | |
| R170 | 1-216-061-00 | METAL CHIP | 3.3K | 5% | 1/10W | |
| R171 | 1-216-097-00 | METAL CHIP | 100K | 5% | 1/10W | |
| R200 | 1-246-403-00 | CARBON | 1.2 | 5% | 1/4W | |
| R202 | 1-216-097-00 | METAL CHIP | 100K | 5% | 1/10W | |
| R203 | 1-216-055-00 | METAL CHIP | 1.8K | 5% | 1/10W | |
| R204 | 1-216-065-00 | METAL CHIP | 4.7K | 5% | 1/10W | |
| R205 | 1-216-049-00 | METAL CHIP | 1K | 5% | 1/10W | |
| R206 | 1-216-065-00 | METAL CHIP | 4.7K | 5% | 1/10W | |
| R207 | 1-216-049-00 | METAL CHIP | 1K | 5% | 1/10W | |
| R208 | 1-216-073-00 | METAL CHIP | 10K | 5% | 1/10W | |
| R209 | 1-216-071-00 | METAL CHIP | 8.2K | 5% | 1/10W | |
| R210 | 1-216-073-00 | METAL CHIP | 10K | 5% | 1/10W | |
| R211 | 1-216-295-00 | METAL CHIP | 0 | 5% | 1/10W | |
| R212 | 1-216-073-00 | METAL CHIP | 10K | 5% | 1/10W | |
| R214 | 1-216-105-00 | METAL CHIP | 220K | 5% | 1/10W | |
| R215 | 1-216-113-00 | METAL CHIP | 470K | 5% | 1/10W | |
| R216 | 1-216-663-11 | METAL CHIP | 3.3K | 0.50% | 1/16W | |
| R217 | 1-216-669-11 | METAL CHIP | 5.6K | 0.50% | 1/16W | |
| R218 | 1-216-059-00 | METAL CHIP | 2.7K | 5% | 1/10W | |
| R219 | 1-216-113-00 | METAL CHIP | 470K | 5% | 1/10W | |
| R220 | 1-216-025-00 | METAL CHIP | 100 | 5% | 1/10W | |
| R221 | 1-216-053-00 | METAL CHIP | 1.5K | 5% | 1/10W | |
| R222 | 1-216-295-00 | METAL CHIP | 0 | 5% | 1/10W | |
| R223 | 1-216-025-00 | METAL CHIP | 100 | 5% | 1/10W | |
| R224 | 1-216-081-00 | METAL CHIP | 22K | 5% | 1/10W | |
| R225 | 1-216-085-00 | METAL CHIP | 33K | 5% | 1/10W | |
| R226 | 1-216-073-00 | METAL CHIP | 10K | 5% | 1/10W | |
| R227 | 1-216-081-00 | METAL CHIP | 22K | 5% | 1/10W | |
| R228 | 1-216-033-00 | METAL CHIP | 220 | 5% | 1/10W | |
| R229 | 1-216-081-00 | METAL CHIP | 22K | 5% | 1/10W | |
| R230 | 1-216-101-00 | METAL CHIP | 150K | 5% | 1/10W | |
| R231 | 1-216-049-00 | METAL CHIP | 1K | 5% | 1/10W | |

When indicating parts by reference number, please include the board name.

| Ref.No | Part No. | Description | | | | Remark |
|---|---|---|---|---|---|---|
| R232 | 1-216-304-11 | METAL CHIP | 3.3 | 5% | 1/10W | |
| R233 | 1-216-304-11 | METAL CHIP | 3.3 | 5% | 1/10W | |
| R234 | 1-216-304-11 | METAL CHIP | 3.3 | 5% | 1/10W | |
| R235 | 1-216-295-00 | METAL CHIP | 0 | 5% | 1/10W | |
| R236 | 1-216-097-00 | METAL CHIP | 100K | 5% | 1/10W | |
| R237 | 1-216-068-00 | METAL CHIP | 6.2K | 5% | 1/10W | |
| R238 | 1-216-069-00 | METAL CHIP | 6.8K | 5% | 1/10W | |
| R239 | 1-216-675-11 | METAL CHIP | 10K | 0.50% | 1/16W | |
| R240 | 1-216-683-11 | METAL CHIP | 22K | 0.50% | 1/16W | |
| R241 | 1-216-667-11 | METAL CHIP | 4.7K | 0.50% | 1/16W | |
| R242 | 1-216-683-11 | METAL CHIP | 22K | 0.50% | 1/16W | |
| R243 | 1-216-681-11 | METAL CHIP | 18K | 0.50% | 1/16W | |
| R244 | 1-216-681-11 | METAL CHIP | 18K | 0.50% | 1/16W | |
| R245 | 1-216-121-00 | METAL CHIP | 1M | 5% | 1/10W | |
| R246 | 1-216-681-11 | METAL CHIP | 18K | 0.50% | 1/16W | |
| R247 | 1-216-080-00 | METAL CHIP | 20K | 5% | 1/10W | |
| R248 | 1-216-080-00 | METAL CHIP | 20K | 5% | 1/10W | |
| R249 | 1-216-080-00 | METAL CHIP | 20K | 5% | 1/10W | |
| R250 | 1-216-080-00 | METAL CHIP | 20K | 5% | 1/10W | |
| R251 | 1-216-080-00 | METAL CHIP | 20K | 5% | 1/10W | |
| R252 | 1-216-080-00 | METAL CHIP | 20K | 5% | 1/10W | |
| R253 | 1-216-080-00 | METAL CHIP | 20K | 5% | 1/10W | |
| R254 | 1-216-080-00 | METAL CHIP | 20K | 5% | 1/10W | |
| R255 | 1-216-073-00 | METAL CHIP | 10K | 5% | 1/10W | |
| R256 | 1-216-073-00 | METAL CHIP | 10K | 5% | 1/10W | |
| R257 | 1-216-073-00 | METAL CHIP | 10K | 5% | 1/10W | |
| R258 | 1-216-073-00 | METAL CHIP | 10K | 5% | 1/10W | |
| R259 | 1-216-073-00 | METAL CHIP | 10K | 5% | 1/10W | |
| R260 | 1-216-073-00 | METAL CHIP | 10K | 5% | 1/10W | |
| R261 | 1-216-073-00 | METAL CHIP | 10K | 5% | 1/10W | |
| R262 | 1-216-080-00 | METAL CHIP | 20K | 5% | 1/10W | |
| R263 | 1-216-073-00 | METAL CHIP | 10K | 5% | 1/10W | |
| R264 | 1-216-033-00 | METAL CHIP | 220 | 5% | 1/10W | |
| R265 | 1-216-057-00 | METAL CHIP | 2.2K | 5% | 1/10W | |
| R266 | 1-216-150-00 | METAL CHIP | 10 | 5% | 1/8W | |
| R267 | 1-216-073-00 | METAL CHIP | 10K | 5% | 1/10W | |
| R268 | 1-216-150-00 | METAL CHIP | 10 | 5% | 1/8W | |
| R269 | 1-216-055-00 | METAL CHIP | 1.8K | 5% | 1/10W | |
| R270 | 1-216-073-00 | METAL CHIP | 10K | 5% | 1/10W | |
| R271 | 1-216-025-00 | METAL CHIP | 100 | 5% | 1/10W | |
| R272 | 1-216-041-00 | METAL CHIP | 470 | 5% | 1/10W | |
| R273 | 1-216-073-00 | METAL CHIP | 10K | 5% | 1/10W | |
| R274 | 1-216-085-00 | METAL CHIP | 33K | 5% | 1/10W | |
| R275 | 1-216-073-00 | METAL CHIP | 10K | 5% | 1/10W | |
| R276 | 1-216-085-00 | METAL CHIP | 33K | 5% | 1/10W | |
| R277 | 1-216-073-00 | METAL CHIP | 10K | 5% | 1/10W | |
| R278 | 1-216-071-00 | METAL CHIP | 8.2K | 5% | 1/10W | |
| R279 | 1-216-061-00 | METAL CHIP | 3.3K | 5% | 1/10W | |
| R280 | 1-216-061-00 | METAL CHIP | 3.3K | 5% | 1/10W | |
| R281 | 1-216-061-00 | METAL CHIP | 3.3K | 5% | 1/10W | |
| R282 | 1-216-061-00 | METAL CHIP | 3.3K | 5% | 1/10W | |
| R283 | 1-216-073-00 | METAL CHIP | 10K | 5% | 1/10W | |
| R284 | 1-216-061-00 | METAL CHIP | 3.3K | 5% | 1/10W | |

| Ref.No | Part No. | Description | | | | Remark |
|---|---|---|---|---|---|---|
| R285 | 1-216-061-00 | METAL CHIP | 3.3K | 5% | 1/10W | |
| R286 | 1-216-073-00 | METAL CHIP | 10K | 5% | 1/10W | |
| R287 | 1-216-049-00 | METAL CHIP | 1K | 5% | 1/10W | |
| R288 | 1-216-049-00 | METAL CHIP | 1K | 5% | 1/10W | |
| R289 | 1-216-295-00 | METAL CHIP | 0 | 5% | 1/10W | |
| R290 | 1-216-073-00 | METAL CHIP | 10K | 5% | 1/10W | |
| R291 | 1-216-073-00 | METAL CHIP | 10K | 5% | 1/10W | |
| R292 | 1-216-295-00 | METAL CHIP | 0 | 5% | 1/10W | |
| R293 | 1-216-073-00 | METAL CHIP | 10K | 5% | 1/10W | |
| R294 | 1-216-073-00 | METAL CHIP | 10K | 5% | 1/10W | |
| R295 | 1-216-103-00 | METAL CHIP | 180K | 5% | 1/10W | |
| R296 | 1-216-121-00 | METAL CHIP | 1M | 5% | 1/10W | |
| R297 | 1-216-097-00 | METAL CHIP | 100K | 5% | 1/10W | |
| R298 | 1-216-073-00 | METAL CHIP | 10K | 5% | 1/10W | |
| R299 | 1-216-073-00 | METAL CHIP | 10K | 5% | 1/10W | |
| R300 | 1-216-073-00 | METAL CHIP | 10K | 5% | 1/10W | |
| R301 | 1-216-073-00 | METAL CHIP | 10K | 5% | 1/10W | |
| R303 | 1-216-073-00 | METAL CHIP | 10K | 5% | 1/10W | |
| R305 | 1-216-085-00 | METAL CHIP | 33K | 5% | 1/10W | |
| R306 | 1-216-077-00 | METAL CHIP | 15K | 5% | 1/10W | |
| R307 | 1-216-043-00 | METAL CHIP | 560 | 5% | 1/10W | |
| R308 | 1-216-049-00 | METAL CHIP | 1K | 5% | 1/10W | |
| R309 | 1-216-073-00 | METAL CHIP | 10K | 5% | 1/10W | |
| R310 | 1-216-049-00 | METAL CHIP | 1K | 5% | 1/10W | |
| R311 | 1-216-113-00 | METAL CHIP | 470K | 5% | 1/10W | |
| R312 | 1-216-115-00 | METAL CHIP | 560K | 5% | 1/10W | |
| R313 | 1-216-073-00 | METAL CHIP | 10K | 5% | 1/10W | |
| R314 | 1-216-073-00 | METAL CHIP | 10K | 5% | 1/10W | |
| R315 | 1-216-073-00 | METAL CHIP | 10K | 5% | 1/10W | |
| R316 | 1-216-073-00 | METAL CHIP | 10K | 5% | 1/10W | |
| R317 | 1-216-073-00 | METAL CHIP | 10K | 5% | 1/10W | |
| R318 | 1-216-073-00 | METAL CHIP | 10K | 5% | 1/10W | |
| R319 | 1-216-085-00 | METAL CHIP | 33K | 5% | 1/10W | |
| R320 | 1-216-685-11 | METAL CHIP | 27K | 0.50% | 1/16W | |
| R321 | 1-216-073-00 | METAL CHIP | 10K | 5% | 1/10W | |
| R322 | 1-216-089-00 | METAL CHIP | 47K | 5% | 1/10W | |
| R323 | 1-216-073-00 | METAL CHIP | 10K | 5% | 1/10W | |
| R324 | 1-216-099-00 | METAL CHIP | 120K | 5% | 1/10W | |
| R326 | 1-216-109-00 | METAL CHIP | 330K | 5% | 1/10W | |
| R327 | 1-216-061-00 | METAL CHIP | 3.3K | 5% | 1/10W | |
| R328 | 1-216-091-00 | METAL CHIP | 56K | 5% | 1/10W | |
| R329 | 1-216-117-00 | METAL CHIP | 680K | 5% | 1/10W | |
| R330 | 1-216-117-00 | METAL CHIP | 680K | 5% | 1/10W | |
| R331 | 1-216-081-00 | METAL CHIP | 22K | 5% | 1/10W | |
| R332 | 1-216-115-00 | METAL CHIP | 560K | 5% | 1/10W | |
| R333 | 1-216-073-00 | METAL CHIP | 10K | 5% | 1/10W | |
| R334 | 1-216-115-00 | METAL CHIP | 560K | 5% | 1/10W | |
| R335 | 1-216-057-00 | METAL CHIP | 2.2K | 5% | 1/10W | |
| R336 | 1-216-083-11 | METAL CHIP | 27K | 5% | 1/10W | |
| R337 | 1-216-073-00 | METAL CHIP | 10K | 5% | 1/10W | |
| R338 | 1-216-121-00 | METAL CHIP | 1M | 5% | 1/10W | |
| R339 | 1-216-089-00 | METAL CHIP | 47K | 5% | 1/10W | |
| R340 | 1-216-663-11 | METAL CHIP | 3.3K | 0.50% | 1/16W | |
| R341 | 1-216-667-11 | METAL CHIP | 4.7K | 0.50% | 1/16W | |

When indicating parts by reference number, please include the board name.

| Ref.No | Part No. | Description | | | | Remark |
|---|---|---|---|---|---|---|
| R342 | 1-216-073-00 | METAL CHIP | 10K | 5% | 1/10W | |
| R343 | 1-216-073-00 | METAL CHIP | 10K | 5% | 1/10W | |
| R344 | 1-216-049-00 | METAL CHIP | 1K | 5% | 1/10W | |
| R345 | 1-216-105-00 | METAL CHIP | 220K | 5% | 1/10W | |
| R346 | 1-216-105-00 | METAL CHIP | 220K | 5% | 1/10W | |
| R347 | 1-216-065-00 | METAL CHIP | 4.7K | 5% | 1/10W | |
| R348 | 1-216-089-00 | METAL CHIP | 47K | 5% | 1/10W | |
| R349 | 1-216-049-00 | METAL CHIP | 1K | 5% | 1/10W | |
| R350 | 1-216-065-00 | METAL CHIP | 4.7K | 5% | 1/10W | |
| R351 | 1-216-073-00 | METAL CHIP | 10K | 5% | 1/10W | |
| R352 | 1-216-685-11 | METAL CHIP | 27K | 0.50% | 1/16W | |
| R353 | 1-216-663-11 | METAL CHIP | 3.3K | 0.50% | 1/16W | |
| R354 | 1-216-689-11 | METAL CHIP | 39K | 0.50% | 1/16W | |
| R355 | 1-216-089-00 | METAL CHIP | 47K | 5% | 1/10W | |
| R356 | 1-216-693-11 | METAL CHIP | 56K | 0.50% | 1/16W | |
| R357 | 1-216-691-11 | METAL CHIP | 47K | 0.50% | 1/16W | |
| R358 | 1-216-663-11 | METAL CHIP | 3.3K | 0.50% | 1/16W | |
| R359 | 1-216-685-11 | METAL CHIP | 27K | 0.50% | 1/16W | |
| R360 | 1-216-073-00 | METAL CHIP | 10K | 5% | 1/10W | |
| R361 | 1-216-085-00 | METAL CHIP | 33K | 5% | 1/10W | |
| R362 | 1-216-073-00 | METAL CHIP | 10K | 5% | 1/10W | |
| R363 | 1-216-073-00 | METAL CHIP | 10K | 5% | 1/10W | |
| R364 | 1-216-085-00 | METAL CHIP | 33K | 5% | 1/10W | |
| R365 | 1-216-097-00 | METAL CHIP | 100K | 5% | 1/10W | |
| R366 | 1-216-097-00 | METAL CHIP | 100K | 5% | 1/10W | |
| R367 | 1-216-089-00 | METAL CHIP | 47K | 5% | 1/10W | |
| R368 | 1-216-085-00 | METAL CHIP | 33K | 5% | 1/10W | |
| R370 | 1-216-097-00 | METAL CHIP | 100K | 5% | 1/10W | |
| R371 | 1-216-073-00 | METAL CHIP | 10K | 5% | 1/10W | |
| R372 | 1-216-681-11 | METAL CHIP | 18K | 0.50% | 1/16W | |
| R373 | 1-216-075-00 | METAL CHIP | 12K | 5% | 1/10W | |
| R375 | 1-216-697-11 | METAL CHIP | 82K | 0.50% | 1/16W | |
| R376 | 1-216-107-00 | METAL CHIP | 270K | 5% | 1/10W | |
| R377 | 1-216-107-00 | METAL CHIP | 270K | 5% | 1/10W | |
| R378 | 1-216-073-00 | METAL CHIP | 10K | 5% | 1/10W | |
| R379 | 1-216-073-00 | METAL CHIP | 10K | 5% | 1/10W | |
| R380 | 1-216-115-00 | METAL CHIP | 560K | 5% | 1/10W | |
| R381 | 1-216-115-00 | METAL CHIP | 560K | 5% | 1/10W | |
| R382 | 1-216-101-00 | METAL CHIP | 150K | 5% | 1/10W | |
| R383 | 1-216-683-11 | METAL CHIP | 22K | 0.50% | 1/16W | |
| R384 | 1-216-667-11 | METAL CHIP | 4.7K | 0.50% | 1/16W | |
| R385 | 1-216-683-11 | METAL CHIP | 22K | 0.50% | 1/16W | |
| R386 | 1-216-667-11 | METAL CHIP | 4 7K | 0.50% | 1/16W | |
| R388 | 1-216-073-00 | METAL CHIP | 10K | 5% | 1/10W | |
| R390 | 1-216-073-00 | METAL CHIP | 10K | 5% | 1/10W | |
| R391 | 1-216-097-00 | METAL CHIP | 100K | 5% | 1/10W | |
| R392 | 1-216-065-00 | METAL CHIP | 4.7K | 5% | 1/10W | |
| R394 | 1-216-035-00 | METAL CHIP | 270 | 5% | 1/10W | |
| R395 | 1-216-073-00 | METAL CHIP | 10K | 5% | 1/10W | |
| R396 | 1-216-693-11 | METAL CHIP | 56K | 0.50% | 1/16W | |
| R397 | 1-216-295-00 | METAL CHIP | 0 | 5% | 1/10W | |
| R398 | 1-216-111-00 | METAL CHIP | 390K | 5% | 1/10W | |
| R399 | 1-216-073-00 | METAL CHIP | 10K | 5% | 1/10W | |

| Ref.No | Part No. | Description | | | | Remark |
|---|---|---|---|---|---|---|
| R401 | 1-216-073-00 | METAL CHIP | 10K | 5% | 1/10W | |
| R402 | 1-216-295-00 | METAL CHIP | 0 | 5% | 1/10W | |
| R404 | 1-216-053-00 | METAL CHIP | 1.5K | 5% | 1/10W | |
| R405 | 1-216-061-00 | METAL CHIP | 3.3K | 5% | 1/10W | |
| R406 | 1-216-295-00 | METAL CHIP | 0 | 5% | 1/10W | |
| R408 | 1-216-115-00 | METAL CHIP | 560K | 5% | 1/10W | |
| R470 | 1-216-295-00 | METAL CHIP | 0 | 5% | 1/10W | |
| R476 | 1-217-587-11 | CARBON | 0 | | 1/4W | |
| R477 | 1-217-587-11 | CARBON | 0 | | 1/4W | |
| R478 | 1-217-587-11 | CARBON | 0 | | 1/4W | |
| R502 | 1-216-073-00 | METAL CHIP | 10K | 5% | 1/10W | |
| R504 | 1-216-061-00 | METAL CHIP | 3.3K | 5% | 1/10W | |
| R505 | 1-216-061-00 | METAL CHIP | 3.3K | 5% | 1/10W | |
| R506 | 1-216-061-00 | METAL CHIP | 3.3K | 5% | 1/10W | |
| R508 | 1-216-085-00 | METAL CHIP | 33K | 5% | 1/10W | |
| R509 | 1-216-081-00 | METAL CHIP | 22K | 5% | 1/10W | |
| R510 | 1-216-081-00 | METAL CHIP | 22K | 5% | 1/10W | |
| R511 | 1-216-081-00 | METAL CHIP | 22K | 5% | 1/10W | |
| R514 | 1-216-073-00 | METAL CHIP | 10K | 5% | 1/10W | |
| R515 | 1-216-073-00 | METAL CHIP | 10K | 5% | 1/10W | |
| R516 | 1-216-073-00 | METAL CHIP | 10K | 5% | 1/10W | |
| R517 | 1-216-049-00 | METAL CHIP | 1K | 5% | 1/10W | |
| R518 | 1-216-073-00 | METAL CHIP | 10K | 5% | 1/10W | |
| R519 | 1-216-085-00 | METAL CHIP | 33K | 5% | 1/10W | |
| R530 | 1-216-081-00 | METAL CHIP | 22K | 5% | 1/10W | |
| R607 | 1-216-045-00 | METAL CHIP | 680 | 5% | 1/10W | |
| R608 | 1-216-097-00 | METAL CHIP | 100K | 5% | 1/10W | |
| R609 | 1-216-049-00 | METAL CHIP | 1K | 5% | 1/10W | |
| R610 | 1-216-049-00 | METAL CHIP | 1K | 5% | 1/10W | |
| R611 | 1-216-001-00 | METAL CHIP | 10 | 5% | 1/10W | |
| R612 | 1-216-053-00 | METAL CHIP | 1.5K | 5% | 1/10W | |
| R613 | 1-216-041-00 | METAL CHIP | 470 | 5% | 1/10W | |
| R614 | 1-216-045-00 | METAL CHIP | 680 | 5% | 1/10W | |
| R615 | 1-216-051-00 | METAL CHIP | 1.2K | 5% | 1/10W | |
| R616 | 1-216-049-00 | METAL CHIP | 1K | 5% | 1/10W | |
| R617 | 1-216-073-00 | METAL CHIP | 10K | 5% | 1/10W | |
| R618 | 1-216-071-00 | METAL CHIP | 8.2K | 5% | 1/10W | |
| R619 | 1-216-051-00 | METAL CHIP | 1.2K | 5% | 1/10W | |
| R620 | 1-216-645-11 | METAL CHIP | 560 | 0.50% | 1/16W | |
| R621 | 1-216-073-00 | METAL CHIP | 10K | 5% | 1/10W | |
| R622 | 1-216-077-00 | METAL CHIP | 15K | 5% | 1/10W | |
| R623 | 1-216-077-00 | METAL CHIP | 15K | 5% | 1/10W | |
| R624 | 1-216-049-00 | METAL CHIP | 1K | 5% | 1/10W | |
| R625 | 1-216-033-00 | METAL CHIP | 220 | 5% | 1/10W | |
| R626 | 1-216-061-00 | METAL CHIP | 3.3K | 5% | 1/10W | |
| R627 | 1-216-081-00 | METAL CHIP | 22K | 5% | 1/10W | |
| R628 | 1-216-079-00 | METAL CHIP | 18K | 5% | 1/10W | |
| R630 | 1-216-295-00 | METAL CHIP | 0 | 5% | 1/10W | |
| R632 | 1-216-085-00 | METAL CHIP | 33K | 5% | 1/10W | |
| R633 | 1-216-085-00 | METAL CHIP | 33K | 5% | 1/10W | |
| R634 | 1-216-085-00 | METAL CHIP | 33K | 5% | 1/10W | |
| R635 | 1-216-029-00 | METAL CHIP | 150 | 5% | 1/10W | |
| R636 | 1-216-065-00 | METAL CHIP | 4.7K | 5% | 1/10W | |

When indicating parts by reference number, please include the board name.

| Ref.No | Part No. | Description | | | | Remark |
|---|---|---|---|---|---|---|
| R637 | 1-216-069-00 | METAL CHIP | 6.8K | 5% | 1/10W | |
| R638 | 1-216-069-00 | METAL CHIP | 6.8K | 5% | 1/10W | |
| R640 | 1-216-073-00 | METAL CHIP | 10K | 5% | 1/10W | |
| R641 | 1-216-085-00 | METAL CHIP | 33K | 5% | 1/10W | |
| R650 | 1-216-041-00 | METAL CHIP | 470 | 5% | 1/10W | |
| R652 | 1-216-109-00 | METAL CHIP | 330K | 5% | 1/10W | |
| R653 | 1-216-109-00 | METAL CHIP | 330K | 5% | 1/10W | |
| R660 | 1-216-073-00 | METAL CHIP | 10K | 5% | 1/10W | |
| R661 | 1-216-073-00 | METAL CHIP | 10K | 5% | 1/10W | |
| R662 | 1-216-033-00 | METAL CHIP | 220 | 5% | 1/10W | |
| R663 | 1-216-033-00 | METAL CHIP | 220 | 5% | 1/10W | |
| R664 | 1-216-097-00 | METAL CHIP | 100K | 5% | 1/10W | |
| R665 | 1-216-097-00 | METAL CHIP | 100K | 5% | 1/10W | |
| R699 | 1-216-049-00 | METAL CHIP | 1K | 5% | 1/10W | |
| R701 | 1-216-105-00 | METAL CHIP | 220K | 5% | 1/10W | |
| R702 | 1-216-081-00 | METAL CHIP | 22K | 5% | 1/10W | |
| R703 | 1-216-089-00 | METAL CHIP | 47K | 5% | 1/10W | |
| R704 | 1-216-097-00 | METAL CHIP | 100K | 5% | 1/10W | |
| R705 | 1-216-085-00 | METAL CHIP | 33K | 5% | 1/10W | |
| R706 | 1-216-117-00 | METAL CHIP | 680K | 5% | 1/10W | |
| R707 | 1-216-091-00 | METAL CHIP | 56K | 5% | 1/10W | |
| R708 | 1-216-073-00 | METAL CHIP | 10K | 5% | 1/10W | |
| R709 | 1-216-097-00 | METAL CHIP | 100K | 5% | 1/10W | |
| R710 | 1-216-089-00 | METAL CHIP | 47K | 5% | 1/10W | |
| R711 | 1-216-073-00 | METAL CHIP | 10K | 5% | 1/10W | |
| R712 | 1-216-097-00 | METAL CHIP | 100K | 5% | 1/10W | |
| R713 | 1-216-111-00 | METAL CHIP | 390K | 5% | 1/10W | |
| R715 | 1-216-049-00 | METAL CHIP | 1K | 5% | 1/10W | |
| R716 | 1-216-065-00 | METAL CHIP | 4.7K | 5% | 1/10W | |
| R717 | 1-216-061-00 | METAL CHIP | 3.3K | 5% | 1/10W | |
| R718 | 1-216-061-00 | METAL CHIP | 3.3K | 5% | 1/10W | |
| R719 | 1-216-061-00 | METAL CHIP | 3.3K | 5% | 1/10W | |
| R720 | 1-216-085-00 | METAL CHIP | 33K | 5% | 1/10W | |
| R721 | 1-216-081-00 | METAL CHIP | 22K | 5% | 1/10W | |
| R722 | 1-216-049-00 | METAL CHIP | 1K | 5% | 1/10W | |
| R723 | 1-216-079-00 | METAL CHIP | 18K | 5% | 1/10W | |
| R724 | 1-216-085-00 | METAL CHIP | 33K | 5% | 1/10W | |
| R725 | 1-216-045-00 | METAL CHIP | 680 | 5% | 1/10W | |
| R726 | 1-216-073-00 | METAL CHIP | 10K | 5% | 1/10W | |
| R727 | 1-216-077-00 | METAL CHIP | 15K | 5% | 1/10W | |
| R728 | 1-216-027-00 | METAL CHIP | 120 | 5% | 1/10W | |
| R729 | 1-216-035-00 | METAL CHIP | 270 | 5% | 1/10W | |
| R730 | 1-216-039-00 | METAL CHIP | 390 | 5% | 1/10W | |
| R731 | 1-216-072-00 | METAL CHIP | 9.1K | 5% | 1/10W | |
| R732 | 1-216-057-00 | METAL CHIP | 2.2K | 5% | 1/10W | |
| R733 | 1-216-051-00 | METAL CHIP | 1.2K | 5% | 1/10W | |
| R734 | 1-216-049-00 | METAL CHIP | 1K | 5% | 1/10W | |
| R735 | 1-216-081-00 | METAL CHIP | 22K | 5% | 1/10W | |
| R736 | 1-216-081-00 | METAL CHIP | 22K | 5% | 1/10W | |
| R737 | 1-216-049-00 | METAL CHIP | 1K | 5% | 1/10W | |
| R738 | 1-216-061-00 | METAL CHIP | 3.3K | 5% | 1/10W | |
| R739 | 1-216-061-00 | METAL CHIP | 3.3K | 5% | 1/10W | |
| R740 | 1-216-065-00 | METAL CHIP | 4.7K | 5% | 1/10W | |
| R741 | 1-216-061-00 | METAL CHIP | 3.3K | 5% | 1/10W | |
| R742 | 1-216-061-00 | METAL CHIP | 3.3K | 5% | 1/10W | |
| R743 | 1-216-065-00 | METAL CHIP | 4.7K | 5% | 1/10W | |
| R744 | 1-216-079-00 | METAL CHIP | 18K | 5% | 1/10W | |
| R745 | 1-216-088-00 | METAL CHIP | 43K | 5% | 1/10W | |
| R746 | 1-216-059-00 | METAL CHIP | 2.7K | 5% | 1/10W | |
| R747 | 1-216-057-00 | METAL CHIP | 2.2K | 5% | 1/10W | |
| R748 | 1-216-067-00 | METAL CHIP | 5.6K | 5% | 1/10W | |
| R749 | 1-216-049-00 | METAL CHIP | 1K | 5% | 1/10W | |
| R750 | 1-216-049-00 | METAL CHIP | 1K | 5% | 1/10W | |
| R751 | 1-216-081-00 | METAL CHIP | 22K | 5% | 1/10W | |
| R752 | 1-216-081-00 | METAL CHIP | 22K | 5% | 1/10W | |
| R753 | 1-216-065-00 | METAL CHIP | 4.7K | 5% | 1/10W | |
| R754 | 1-216-057-00 | METAL CHIP | 2.2K | 5% | 1/10W | |
| R755 | 1-216-057-00 | METAL CHIP | 2.2K | 5% | 1/10W | |
| R756 | 1-216-065-00 | METAL CHIP | 4.7K | 5% | 1/10W | |
| R757 | 1-216-057-00 | METAL CHIP | 2.2K | 5% | 1/10W | |
| R758 | 1-216-057-00 | METAL CHIP | 2.2K | 5% | 1/10W | |
| R759 | 1-216-070-00 | METAL CHIP | 7.5K | 5% | 1/10W | |
| R760 | 1-216-069-00 | METAL CHIP | 6.8K | 5% | 1/10W | |
| R761 | 1-216-085-00 | METAL CHIP | 33K | 5% | 1/10W | |
| R762 | 1-216-073-00 | METAL CHIP | 10K | 5% | 1/10W | |
| R764 | 1-216-073-00 | METAL CHIP | 10K | 5% | 1/10W | |

### VARIABLE RESISTOR

| | | |
|---|---|---|
| RV201 | 1-228-998-00 | RES, ADJ, METAL GLAZE 220K |
| RV202 | 1-228-998-00 | RES, ADJ, METAL GLAZE 220K |
| RV203 | 1-228-993-00 | RES, ADJ, CARBON 4.7K |
| RV204 | 1-228-993-00 | RES, ADJ, CARBON 4.7K |
| RV205 | 1-228-995-00 | RES, ADJ, CARBON 22K |
| RV206 | 1-228-995-00 | RES, ADJ, METAL GLAZE 22K |
| RV207 | 1-228-995-00 | RES, ADJ, CARBON 22K |
| RV208 | 1-228-995-00 | RES, ADJ, METAL GLAZE 22K |
| RV209 | 1-228-989-00 | RES, ADJ, CARBON 470 |
| RV210 | 1-228-991-00 | RES, ADJ, METAL GLAZE 2.2K |
| RV212 | 1-228-993-00 | RES, ADJ, CARBON 4.7K |
| RV215 | 1-228-991-00 | RES, ADJ, METAL GLAZE 2.2K |
| RV216 | 1-228-991-00 | RES, ADJ, METAL GLAZE 2.2K |
| RV217 | 1-228-997-00 | RES, ADJ, METAL GLAZE 100K |
| RV218 | 1-228-997-00 | RES, ADJ, METAL GLAZE 100K |
| RV601 | 1-228-991-00 | RES, ADJ, CARBON 2.2K |
| RV602 | 1-228-991-00 | RES, ADJ, CARBON 2.2K |
| RV603 | 1-228-997-00 | RES, ADJ, CARBON 100K |
| RV604 | 1-228-994-00 | RES, ADJ, CARBON 10K |
| RV701 | 1-228-996-00 | RES, ADJ, CARBON 47K |

### SWITCH

| | | |
|---|---|---|
| SW100 | 1-553-725-21 | SWITCH, SLIDE |
| SW500 | 1-553-725-21 | SWITCH, SLIDE |

### CRYSTAL

| | | |
|---|---|---|
| X001 | 1-567-346-11 | OSCILLATOR, CERAMIC (5MHz) |
| X002 | 1-567-121-00 | VIBRATOR, CRYSTAL (4.19MHz) |
| X080 | 1-567-192-11 | OSCILLATOR, CERAMIC (4MHz) |

When indicating parts by reference number, please include the board name.

| Ref.No | Part No. | Description | | | Remark |
|---|---|---|---|---|---|
| X120 | 1-527-841-11 | OSCILLATOR, CERAMIC (660KHz) | | | |
| X201 | 1-567-345-11 | VIBRATOR, CRYSTAL (5.94MHz) | | | |
| X600 | 1-567-419-11 | VIBRATOR, LITHIUM TANTALATE (11.58MHz) | | | |
| ********** | | | | | |
| | *1-622-469-11 | RB-2 BOARD<br>********** | | | |
| | | CAPASITOR | | | |
| C450 | 1-124-584-00 | ELECT | 100MF | 20% | 10V |
| C451 | 1-101-004-00 | CERAMIC | 0.01MF | | 50V |
| | | CONNECTOR | | | |
| CN450 | *1-564-012-00 | PIN, CONNECTOR 2P | | | |
| | | DIODE | | | |
| D450 | 8-719-911-19 | DIODE 1SS119 | | | |
| D451 | 8-719-911-19 | DIODE 1SS119 | | | |
| D452 | 8-719-911-19 | DIODE 1SS119 | | | |
| | | IC | | | |
| IC450 | 8-759-932-04 | IC MB88306P | | | |
| | | TRANSISTOR | | | |
| Q450 | 8-729-900-89 | TRANSISTOR DTC144ES | | | |
| Q451 | 8-729-900-89 | TRANSISTOR DTC144ES | | | |
| Q452 | 8-729-900-65 | TRANSISTOR DTA144ES | | | |
| Q453 | 8-729-900-65 | TRANSISTOR DTA144ES | | | |
| Q454 | 8-729-900-89 | TRANSISTOR DTC144ES | | | |
| Q455 | 8-729-900-74 | TRANSISTOR DTC143TS | | | |
| Q456 | 8-729-900-74 | TRANSISTOR DTC143TS | | | |
| Q457 | 8-729-900-89 | TRANSISTOR DTC144ES | | | |
| Q458 | 8-729-900-65 | TRANSISTOR DTA144ES | | | |
| | | RESISTOR | | | |
| R450 | 1-247-429-00 | CARBON | 10K | 5% 1/6W | |
| R451 | 1-247-429-00 | CARBON | 10K | 5% 1/6W | |
| R452 | 1-247-886-00 | CARBON | 200K | 5% 1/6W | |
| R453 | 1-249-438-11 | CARBON | 56K | 5% 1/6W | |
| R454 | 1-249-433-11 | CARBON | 22K | 5% 1/6W | |
| R455 | 1-215-477-00 | CARBON | 220K | 5% 1/6W | |
| R456 | 1-247-429-00 | CARBON | 10K | 5% 1/6W | |
| R457 | 1-249-417-11 | CARBON | 1K | 5% 1/6W | |
| ********** | | | | | |
| | *A-7060-468-A | AU-22 BOARD, COMPLETE<br>**********<br>(Including the MK-2, AF-20(IC501),<br>NR-6(IC601) and AD-12(IC701) board) | | | |
| | | CAPACITOR | | | |
| C101 | 1-163-075-00 | CERAMIC CHIP | 0.047MF | | 50V |
| C201 | 1-163-181-00 | CERAMIC CHIP | 100PF | 5% | 50V |
| C203 | 1-163-181-00 | CERAMIC CHIP | 100PF | 5% | 50V |
| C210 | 1-163-075-00 | CERAMIC CHIP | 0.047MF | | 50V |
| C211 | 1-124-443-00 | ELECT | 100MF | 20% | 10V |
| C212 | 1-163-075-00 | CERAMIC CHIP | 0.047MF | | 50V |
| C213 | 1-124-443-00 | ELECT | 100MF | 20% | 10V |
| C214 | 1-163-075-00 | CERAMIC CHIP | 0.047MF | | 50V |
| C215 | 1-124-443-00 | ELECT | 100MF | 20% | 10V |
| C216 | 1-163-075-00 | CERAMIC CHIP | 0.047MF | | 50V |
| C217 | 1-124-443-00 | ELECT | 100MF | 20% | 10V |
| C218 | 1-124-472-11 | ELECT | 470MF | 20% | 10V |
| C219 | 1-124-472-11 | ELECT | 470MF | 20% | 10V |
| C220 | 1-124-443-00 | ELECT | 100MF | 20% | 10V |
| C224 | 1-163-075-00 | CERAMIC CHIP | 0.047MF | | 50V |
| C225 | 1-163-075-00 | CERAMIC CHIP | 0.047MF | | 50V |
| C226 | 1-163-075-00 | CERAMIC CHIP | 0.047MF | | 50V |
| C227 | 1-163-075-00 | CERAMIC CHIP | 0.047MF | | 50V |
| C301 | 1-124-443-00 | ELECT | 100MF | 20% | 10V |
| C305 | 1-124-903-00 | ELECT | 1MF | 20% | 50V |
| C306 | 1-163-075-00 | CERAMIC CHIP | 0.047MF | | 50V |
| C307 | 1-130-497-00 | MYLAR | 0.15MF | 5% | 50V |
| C308 | 1-130-497-00 | MYLAR | 0.15MF | 5% | 50V |
| C309 | 1-163-101-00 | CERAMIC CHIP | 22PF | 5% | 50V |
| C310 | 1-163-117-00 | CERAMIC CHIP | 100PF | 5% | 50V |
| C311 | 1-130-472-00 | MYLAR | 0.0012MF | 5% | 50V |
| C312 | 1-163-117-00 | CERAMIC CHIP | 100PF | 5% | 50V |
| C313 | 1-130-474-00 | MYLAR | 0.0018MF | 5% | 50V |
| C314 | 1-130-489-00 | MYLAR | 0.033MF | 5% | 50V |
| C321 | 1-124-610-00 | ELECT | 10MF | 20% | 50V |
| C401 | 1-124-443-00 | ELECT | 100MF | 20% | 10V |
| C405 | 1-124-903-00 | ELECT | 1MF | 20% | 50V |
| C406 | 1-163-075-00 | CERAMIC CHIP | 0.047MF | | 50V |
| C407 | 1-130-497-00 | MYLAR | 0.15MF | 5% | 50V |
| C408 | 1-130-497-00 | MYLAR | 0.15MF | 5% | 50V |
| C409 | 1-163-101-00 | CERAMIC CHIP | 22PF | 5% | 50V |
| C410 | 1-163-117-00 | CERAMIC CHIP | 100PF | 5% | 50V |
| C411 | 1-130-472-00 | MYLAR | 0.0012MF | 5% | 50V |
| C412 | 1-163-117-00 | CERAMIC CHIP | 100PF | 5% | 50V |
| C413 | 1-130-474-00 | MYLAR | 0.0018MF | 5% | 50V |
| C414 | 1-130-489-00 | MYLAR | 0.033MF | 5% | 50V |
| C421 | 1-124-610-00 | ELECT | 10MF | 20% | 50V |
| C502 | 1-163-059-00 | CERAMIC CHIP | 0.01MF | 10% | 50V |
| C507 | 1-124-903-00 | ELECT | 1MF | 20% | 50V |
| C801 | 1-163-059-00 | CERAMIC CHIP | 0.01MF | 10% | 50V |
| C802 | 1-163-059-00 | CERAMIC CHIP | 0.01MF | 10% | 50V |
| C803 | 1-163-074-00 | CERAMIC CHIP | 0.033MF | 10% | 25V |
| C804 | 1-163-074-00 | CERAMIC CHIP | 0.033MF | 10% | 25V |
| C805 | 1-124-903-00 | ELECT | 1MF | 20% | 50V |
| C806 | 1-163-059-00 | CERAMIC CHIP | 0.01MF | 10% | 50V |
| C821 | 1-163-059-00 | CERAMIC CHIP | 0.01MF | 10% | 50V |
| C822 | 1-163-059-00 | CERAMIC CHIP | 0.01MF | 10% | 50V |
| C823 | 1-163-074-00 | CERAMIC CHIP | 0.033MF | 10% | 25V |
| C824 | 1-163-074-00 | CERAMIC CHIP | 0.033MF | 10% | 25V |

When indicating parts by reference number, please include the board name.

| Ref.No | Part No. | Description | | | Remark |
|---|---|---|---|---|---|
| C825 | 1-124-255-91 | ELECT | 1MF | | 50V |
| C826 | 1-163-059-00 | CERAMIC CHIP | 0.01MF | 10% | 50V |
| C840 | 1-124-892-11 | ELECT | 47MF | 20% | 10V |
| C841 | 1-163-059-00 | CERAMIC CHIP | 0.01MF | 10% | 50V |
| C901 | 1-124-902-00 | ELECT | 0.47MF | 20% | 50V |
| C902 | 1-163-015-00 | CERAMIC CHIP | 0.0033MF | 10% | 50V |
| C903 | 1-124-230-91 | ELECT | 47MF | | 10V |
| C904 | 1-124-610-91 | ELECT | 0.47MF | | 50V |
| C951 | 1-124-902-00 | ELECT | 0.47MF | 20% | 50V |
| | | CONNECTOR | | | |
| CN201 | *1-564-004-00 | PIN, CONNECTOR 5P | | | |
| CN202 | *1-564-003-00 | PIN, CONNECTOR 4P | | | |
| CN204 | *1-564-005-00 | PIN, CONNECTOR 6P | | | |
| CN205 | *1-564-003-00 | PIN, CONNECTOR 4P | | | |
| CN207 | *1-564-002-00 | PIN, CONNECTOR 3P | | | |
| CN208 | *1-564-004-00 | PIN, CONNECTOR 5P | | | |
| CN501 | *1-564-004-00 | PIN, CONNECTOR 5P | | | |
| CN801 | *1-564-002-00 | PIN, CONNECTOR 3P | | | |
| CN901 | *1-564-001-11 | PIN, CONNECTOR 2P | | | |
| | | JACK | | | |
| CNJ251 | 1-507-500-61 | JACK, PIN 2P | | | |
| CNJ253 | 1-507-500-61 | JACK, PIN 2P | | | |
| | | DIODE | | | |
| D201 | 8-719-110-47 | DIODE RD18ESB | | | |
| D203 | 8-719-110-47 | DIODE RD18ESB | | | |
| D701 | 8-719-109-58 | DIODE RD2.7ES-B | | | |
| | | FILTER | | | |
| FL301 | 1-235-565-21 | FILTER, LOW PASS (15KHz) | | | |
| FL401 | 1-235-565-21 | FILTER, LOW PASS (15KHz) | | | |
| FL501 | 1-235-484-11 | FILTER, BAND PASS (1.5MHZ) | | | |
| FL801 | 1-235-517-21 | FILTER, BAND PASS (228.748KHz) | | | |
| FL802 | 1-235-517-21 | FILTER, BAND PASS (228.748KHz) | | | |
| | | IC | | | |
| IC101 | 8-759-937-21 | IC CXD1078M | | | |
| IC201 | 8-759-240-52 | IC TC4052BP | | | |
| IC203 | 8-759-145-58 | IC UPC4558C | | | |
| IC301 | 8-759-700-40 | IC NJM4560S | | | |
| IC302 | 8-759-240-51 | IC TC4051BP | | | |
| IC303 | 8-759-700-40 | IC NJM4560S | | | |
| IC304 | 8-759-700-40 | IC NJM4560S | | | |
| IC401 | 8-759-700-40 | IC NJM4560S | | | |
| IC402 | 8-759-240-51 | IC TC4051BP | | | |
| IC403 | 8-759-700-40 | IC NJM4560S | | | |
| IC404 | 8-759-700-40 | IC NJM4560S | | | |
| IC501 | A-7068-021-A | AF-20 BOARD, COMPLETE | | | |
| IC503 | 8-759-240-53 | IC TC4053BP | | | |
| IC601 | *A-7068-022-A | AD-12 BOARD, COMPLETE | | | |
| IC602 | 8-729-240-53 | IC TC4053BP | | | |

| Ref.No | Part No. | Description | Remark |
|---|---|---|---|
| IC701 | *A-7068-025-A | NR-6 BOARD, COMPLETE | |
| IC901 | 8-759-933-22 | IC BA3707 | |
| | | TRANSISTOR | |
| Q201 | 8-729-901-06 | TRANSISTOR DTA144EK | |
| Q203 | 8-729-100-67 | TRANSISTOR 2SC1623-L7 | |
| Q204 | 8-729-901-01 | TRANSISTOR DTC144EK | |
| Q208 | 8-729-113-32 | TRANSISTOR 2SB733 | |
| Q209 | 8-729-100-67 | TRANSISTOR 2SC1623-L7 | |
| Q210 | 8-729-100-67 | TRANSISTOR 2SC1623-L7 | |
| Q211 | 8-729-100-76 | TRANSISTOR 2SA812 | |
| Q212 | 8-729-100-76 | TRANSISTOR 2SA812 | |
| Q213 | 8-729-177-32 | TRANSISTOR 2SD773 | |
| Q301 | 8-729-109-42 | TRANSISTOR 2SK94-X2 | |
| Q302 | 8-729-100-67 | TRANSISTOR 2SC1623-L7 | |
| Q401 | 8-729-109-42 | TRANSISTOR 2SK94-X2 | |
| Q402 | 8-729-100-67 | TRANSISTOR 2SC1623-L7 | |
| Q502 | 8-729-901-01 | TRANSISTOR DTC144EK | |
| Q801 | 8-729-100-67 | TRANSISTOR 2SC1623-L7 | |
| Q802 | 8-729-100-76 | TRANSISTOR 2SA812 | |
| Q803 | 8-729-100-67 | TRANSISTOR 2SC1623-L7 | |
| Q821 | 8-729-100-67 | TRANSISTOR 2SC1623-L7 | |
| Q822 | 8-729-100-76 | TRANSISTOR 2SA812 | |
| Q823 | 8-729-100-67 | TRANSISTOR 2SC1623-L7 | |
| Q901 | 8-729-100-76 | TRANSISTOR 2SA812 | |
| | | RESISTOR | |
| R001 | 1-216-295-00 | METAL CHIP 0 5% 1/10W | |
| R002 | 1-216-295-00 | METAL CHIP 0 5% 1/10W | |
| R003 | 1-216-295-00 | METAL CHIP 0 5% 1/10W | |
| R004 | 1-216-295-00 | METAL CHIP 0 5% 1/10W | |
| R005 | 1-216-295-00 | METAL CHIP 0 5% 1/10W | |
| R006 | 1-216-295-00 | METAL CHIP 0 5% 1/10W | |
| R007 | 1-216-295-00 | METAL CHIP 0 5% 1/10W | |
| R008 | 1-216-295-00 | METAL CHIP 0 5% 1/10W | |
| R009 | 1-216-295-00 | METAL CHIP 0 5% 1/10W | |
| R010 | 1-216-295-00 | METAL CHIP 0 5% 1/10W | |
| R011 | 1-216-295-00 | METAL CHIP 0 5% 1/10W | |
| R012 | 1-216-295-00 | METAL CHIP 0 5% 1/10W | |
| R013 | 1-216-295-00 | METAL CHIP 0 5% 1/10W | |
| R015 | 1-216-295-00 | METAL CHIP 0 5% 1/10W | |
| R016 | 1-216-295-00 | METAL CHIP 0 5% 1/10W | |
| R017 | 1-216-295-00 | METAL CHIP 0 5% 1/10W | |
| R018 | 1-216-295-00 | METAL CHIP 0 5% 1/10W | |
| R019 | 1-216-295-00 | METAL CHIP 0 5% 1/10W | |
| R020 | 1-216-295-00 | METAL CHIP 0 5% 1/10W | |
| R021 | 1-216-295-00 | METAL CHIP 0 5% 1/10W | |
| R022 | 1-216-295-00 | METAL CHIP 0 5% 1/10W | |
| R023 | 1-216-295-00 | METAL CHIP 0 5% 1/10W | |
| R024 | 1-216-965-00 | METAL CHIP 0 5% 1/10W | |
| R025 | 1-216-965-00 | METAL CHIP 0 5% 1/10W | |
| R026 | 1-216-295-00 | METAL CHIP 0 5% 1/10W | |

When indicating parts by reference number, please include the board name.

| Ref.No | Part No. | Description | | | | Remark |
|---|---|---|---|---|---|---|
| R027 | 1-216-295-00 | METAL CHIP | 0 | 5% | 1/10W | |
| R028 | 1-216-295-00 | METAL CHIP | 0 | 5% | 1/10W | |
| R029 | 1-216-295-00 | METAL CHIP | 0 | 5% | 1/10W | |
| R030 | 1-216-295-00 | METAL CHIP | 0 | 5% | 1/10W | |
| R031 | 1-216-295-00 | METAL CHIP | 0 | 5% | 1/10W | |
| R032 | 1-216-295-00 | METAL CHIP | 0 | 5% | 1/10W | |
| R033 | 1-216-295-00 | METAL CHIP | 0 | 5% | 1/10W | |
| R034 | 1-216-295-00 | METAL CHIP | 0 | 5% | 1/10W | |
| R035 | 1-216-295-00 | METAL CHIP | 0 | 5% | 1/10W | |
| R036 | 1-216-295-00 | METAL CHIP | 0 | 5% | 1/10W | |
| R037 | 1-216-295-00 | METAL CHIP | 0 | 5% | 1/10W | |
| R038 | 1-216-295-00 | METAL CHIP | 0 | 5% | 1/10W | |
| R039 | 1-216-295-00 | METAL CHIP | 0 | 5% | 1/10W | |
| R040 | 1-216-295-00 | METAL CHIP | 0 | 5% | 1/10W | |
| R041 | 1-216-295-00 | METAL CHIP | 0 | 5% | 1/10W | |
| R042 | 1-216-295-00 | METAL CHIP | 0 | 5% | 1/10W | |
| R043 | 1-216-295-00 | METAL CHIP | 0 | 5% | 1/10W | |
| R044 | 1-216-295-00 | METAL CHIP | 0 | 5% | 1/10W | |
| R045 | 1-216-295-00 | METAL CHIP | 0 | 5% | 1/10W | |
| R046 | 1-216-295-00 | METAL CHIP | 0 | 5% | 1/10W | |
| R047 | 1-216-295-00 | METAL CHIP | 0 | 5% | 1/10W | |
| R053 | 1-216-295-00 | METAL CHIP | 0 | 5% | 1/10W | |
| R054 | 1-216-295-00 | METAL CHIP | 0 | 5% | 1/10W | |
| R055 | 1-216-296-00 | METAL CHIP | 0 | 5% | 1/8W | |
| R056 | 1-216-296-00 | METAL CHIP | 0 | 5% | 1/8W | |
| R057 | 1-216-296-00 | METAL CHIP | 0 | 5% | 1/8W | |
| R058 | 1-216-296-00 | METAL CHIP | 0 | 5% | 1/8W | |
| R059 | 1-216-296-00 | METAL CHIP | 0 | 5% | 1/8W | |
| R060 | 1-216-296-00 | METAL CHIP | 0 | 5% | 1/8W | |
| R061 | 1-216-296-00 | METAL CHIP | 0 | 5% | 1/8W | |
| R062 | 1-216-296-00 | METAL CHIP | 0 | 5% | 1/8W | |
| R063 | 1-216-296-00 | METAL CHIP | 0 | 5% | 1/8W | |
| R064 | 1-216-296-00 | METAL CHIP | 0 | 5% | 1/8W | |
| R065 | 1-216-296-00 | METAL CHIP | 0 | 5% | 1/8W | |
| R066 | 1-216-296-00 | METAL CHIP | 0 | 5% | 1/8W | |
| R067 | 1-216-296-00 | METAL CHIP | 0 | 5% | 1/8W | |
| R068 | 1-216-296-00 | METAL CHIP | 0 | 5% | 1/8W | |
| R069 | 1-216-296-00 | METAL CHIP | 0 | 5% | 1/8W | |
| R070 | 1-216-296-00 | METAL CHIP | 0 | 5% | 1/8W | |
| R072 | 1-216-296-00 | METAL CHIP | 0 | 5% | 1/8W | |
| R073 | 1-216-296-00 | METAL CHIP | 0 | 5% | 1/8W | |
| R074 | 1-216-296-00 | METAL CHIP | 0 | 5% | 1/8W | |
| R075 | 1-216-296-00 | METAL CHIP | 0 | 5% | 1/8W | |
| R076 | 1-216-296-00 | METAL CHIP | 0 | 5% | 1/8W | |
| R077 | 1-216-296-00 | METAL CHIP | 0 | 5% | 1/8W | |
| R078 | 1-216-296-00 | METAL CHIP | 0 | 5% | 1/8W | |
| R079 | 1-216-296-00 | METAL CHIP | 0 | 5% | 1/8W | |
| R080 | 1-216-296-00 | METAL CHIP | 0 | 5% | 1/8W | |
| R081 | 1-216-296-00 | METAL CHIP | 0 | 5% | 1/8W | |
| R082 | 1-216-296-00 | METAL CHIP | 0 | 5% | 1/8W | |
| R083 | 1-216-296-00 | METAL CHIP | 0 | 5% | 1/8W | |
| R084 | 1-216-296-00 | METAL CHIP | 0 | 5% | 1/8W | |
| R085 | 1-216-296-00 | METAL CHIP | 0 | 5% | 1/8W | |
| R086 | 1-216-296-00 | METAL CHIP | 0 | 5% | 1/8W | |
| R087 | 1-216-296-00 | METAL CHIP | 0 | 5% | 1/8W | |
| R088 | 1-216-296-00 | METAL CHIP | 0 | 5% | 1/8W | |
| R089 | 1-216-296-00 | METAL CHIP | 0 | 5% | 1/8W | |
| R102 | 1-216-073-00 | METAL CHIP | 10K | 5% | 1/10W | |
| R104 | 1-216-081-00 | METAL CHIP | 22K | 5% | 1/10W | |
| R107 | 1-216-073-00 | METAL CHIP | 10K | 5% | 1/10W | |
| R110 | 1-216-073-00 | METAL CHIP | 10K | 5% | 1/10W | |
| R202 | 1-249-393-11 | CARBON | 10 | 5% | 1/6W | |
| R203 | 1-216-295-00 | METAL CHIP | 0 | 5% | 1/10W | |
| R205 | 1-216-097-00 | METAL CHIP | 100K | 5% | 1/10W | |
| R206 | 1-216-097-00 | METAL CHIP | 100K | 5% | 1/10W | |
| R207 | 1-216-097-00 | METAL CHIP | 100K | 5% | 1/10W | |
| R210 | 1-216-085-00 | METAL CHIP | 33K | 5% | 1/10W | |
| R211 | 1-216-073-00 | METAL CHIP | 10K | 5% | 1/10W | |
| R216 | 1-216-097-00 | METAL CHIP | 100K | 5% | 1/10W | |
| R217 | 1-216-097-00 | METAL CHIP | 100K | 5% | 1/10W | |
| R218 | 1-216-097-00 | METAL CHIP | 100K | 5% | 1/10W | |
| R220 | 1-216-081-00 | METAL CHIP | 22K | 5% | 1/10W | |
| R221 | 1-216-089-00 | METAL CHIP | 47K | 5% | 1/10W | |
| R230 | 1-216-061-00 | METAL CHIP | 3.3K | 5% | 1/10W | |
| R233 | 1-216-069-00 | METAL CHIP | 6.8K | 5% | 1/10W | |
| R236 | 1-216-071-00 | METAL CHIP | 8.2K | 5% | 1/10W | |
| R237 | 1-216-073-00 | METAL CHIP | 10K | 5% | 1/10W | |
| R238 | 1-216-061-00 | METAL CHIP | 3.3K | 5% | 1/10W | |
| R240 | 1-216-061-00 | METAL CHIP | 3.3K | 5% | 1/10W | |
| R241 | 1-216-074-00 | METAL CHIP | 11K | 5% | 1/10W | |
| R242 | 1-216-061-00 | METAL CHIP | 3.3K | 5% | 1/10W | |
| R244 | 1-216-081-00 | METAL CHIP | 22K | 5% | 1/10W | |
| R305 | 1-216-295-00 | METAL CHIP | 0 | 5% | 1/10W | |
| R307 | 1-216-079-00 | METAL CHIP | 18K | 5% | 1/10W | |
| R309 | 1-216-093-00 | METAL CHIP | 68K | 5% | 1/10W | |
| R310 | 1-216-099-00 | METAL CHIP | 120K | 5% | 1/10W | |
| R314 | 1-247-837-00 | CARBON | 1.8K | 5% | 1/6W | |
| R315 | 1-247-841-00 | CARBON | 2.7K | 5% | 1/6W | |
| R317 | 1-215-477-00 | CARBON | 220K | 5% | 1/6W | |
| R318 | 1-249-435-11 | CARBON | 33K | 5% | 1/6W | |
| R319 | 1-249-433-11 | CARBON | 22K | 5% | 1/6W | |
| R320 | 1-215-473-00 | CARBON | 150K | 5% | 1/6W | |
| R321 | 1-216-001-00 | METAL CHIP | 10 | 5% | 1/10W | |
| R322 | 1-216-101-00 | METAL CHIP | 150K | 5% | 1/10W | |
| R327 | 1-216-059-00 | METAL CHIP | 2.7K | 5% | 1/10W | |
| R330 | 1-216-053-00 | METAL CHIP | 1.5K | 5% | 1/10W | |
| R331 | 1-216-025-00 | METAL CHIP | 100 | 5% | 1/10W | |
| R332 | 1-216-095-00 | METAL CHIP | 82K | 5% | 1/10W | |
| R333 | 1-247-854-00 | CARBON | 9.1K | 5% | 1/6W | |
| R335 | 1-249-414-11 | CARBON | 560 | 5% | 1/6W | |
| R336 | 1-247-860-00 | CARBON | 16K | 5% | 1/6W | |
| R337 | 1-216-065-00 | METAL CHIP | 4.7K | 5% | 1/10W | |
| R338 | 1-249-423-11 | CARBON | 3.3K | 5% | 1/6W | |
| R339 | 1-249-423-11 | CARBON | 3.3K | 5% | 1/6W | |
| R340 | 1-247-844-00 | CARBON | 3.6K | 5% | 1/6W | |
| R345 | 1-249-427-11 | CARBON | 6.8K | 5% | 1/6W | |

When indicating parts by reference number, please include the board name.

| Ref.No | Part No. | Description | | | | Remark |
|---|---|---|---|---|---|---|
| R346 | 1-216-025-00 | METAL CHIP | 100 | 5% | 1/10W | |
| R347 | 1-216-087-00 | METAL CHIP | 39K | 5% | 1/10W | |
| R349 | 1-216-059-00 | METAL CHIP | 2.7K | 5% | 1/10W | |
| R350 | 1-249-425-11 | CARBON | 4.7K | 5% | 1/6W | |
| R351 | 1-249-423-11 | CARBON | 3.3K | 5% | 1/6W | |
| R360 | 1-215-418-00 | CARBON | 750 | 5% | 1/6W | |
| R362 | 1-247-858-00 | CARBON | 13K | 5% | 1/6W | |
| R363 | 1-247-861-00 | CARBON | 18K | 5% | 1/6W | |
| R370 | 1-216-065-00 | METAL CHIP | 4.7K | 5% | 1/10W | |
| R407 | 1-216-079-00 | METAL CHIP | 18K | 5% | 1/10W | |
| R409 | 1-216-093-00 | METAL CHIP | 68K | 5% | 1/10W | |
| R410 | 1-216-099-00 | METAL CHIP | 120K | 5% | 1/10W | |
| R414 | 1-247-837-00 | CARBON | 1.8K | 5% | 1/6W | |
| R415 | 1-247-841-00 | CARBON | 2.7K | 5% | 1/6W | |
| R416 | 1-216-295-00 | METAL CHIP | 0 | 5% | 1/10W | |
| R417 | 1-215-477-00 | CARBON | 220K | 5% | 1/6W | |
| R418 | 1-249-435-11 | CARBON | 33K | 5% | 1/6W | |
| R419 | 1-249-433-11 | CARBON | 22K | 5% | 1/6W | |
| R420 | 1-215-473-00 | CARBON | 150K | 5% | 1/6W | |
| R421 | 1-216-001-00 | METAL CHIP | 10 | 5% | 1/10W | |
| R422 | 1-216-101-00 | METAL CHIP | 150K | 5% | 1/10W | |
| R427 | 1-216-059-00 | METAL CHIP | 2.7K | 5% | 1/10W | |
| R430 | 1-216-053-00 | METAL CHIP | 1.5K | 5% | 1/10W | |
| R431 | 1-216-025-00 | METAL CHIP | 100 | 5% | 1/10W | |
| R432 | 1-216-095-00 | METAL CHIP | 82K | 5% | 1/10W | |
| R433 | 1-247-854-00 | CARBON | 9.1K | 5% | 1/6W | |
| R435 | 1-249-414-11 | CARBON | 560 | 5% | 1/6W | |
| R436 | 1-247-860-00 | CARBON | 16K | 5% | 1/6W | |
| R437 | 1-216-065-00 | METAL CHIP | 4.7K | 5% | 1/10W | |
| R438 | 1-249-423-11 | CARBON | 3.3K | 5% | 1/6W | |
| R439 | 1-249-423-11 | CARBON | 3.3K | 5% | 1/6W | |
| R440 | 1-247-844-00 | CARBON | 3.6K | 5% | 1/6W | |
| R445 | 1-249-427-11 | CARBON | 6.8K | 5% | 1/6W | |
| R446 | 1-216-025-00 | METAL CHIP | 100 | 5% | 1/10W | |
| R447 | 1-247-869-00 | CARBON | 39K | 5% | 1/6W | |
| R449 | 1-216-059-00 | METAL CHIP | 2.7K | 5% | 1/10W | |
| R450 | 1-249-425-11 | CARBON | 4.7K | 5% | 1/6W | |
| R451 | 1-249-423-11 | CARBON | 3.3K | 5% | 1/6W | |
| R460 | 1-215-418-00 | CARBON | 750 | 5% | 1/6W | |
| R462 | 1-247-858-00 | CARBON | 13K | 5% | 1/6W | |
| R463 | 1-247-861-00 | CARBON | 18K | 5% | 1/6W | |
| R470 | 1-216-065-00 | METAL CHIP | 4.7K | 5% | 1/10W | |
| R501 | 1-216-079-00 | METAL CHIP | 18K | 5% | 1/10W | |
| R502 | 1-216-067-00 | METAL CHIP | 5.6K | 5% | 1/10W | |
| R503 | 1-216-063-00 | METAL CHIP | 3.9K | 5% | 1/10W | |
| R505 | 1-216-063-00 | METAL CHIP | 3.9K | 5% | 1/10W | |
| R506 | 1-216-049-00 | METAL CHIP | 1K | 5% | 1/10W | |
| R562 | 1-216-069-00 | METAL CHIP | 6.8K | 5% | 1/10W | |
| R563 | 1-216-067-00 | METAL CHIP | 5.6K | 5% | 1/10W | |
| R564 | 1-216-065-00 | METAL CHIP | 4.7K | 5% | 1/10W | |
| R565 | 1-216-057-00 | METAL CHIP | 2.2K | 5% | 1/10W | |
| R566 | 1-216-073-00 | METAL CHIP | 10K | 5% | 1/10W | |
| R570 | 1-216-047-00 | METAL CHIP | 820 | 5% | 1/10W | |

| Ref.No | Part No. | Description | | | | Remark |
|---|---|---|---|---|---|---|
| R701 | 1-216-295-00 | METAL CHIP | 0 | 5% | 1/10W | |
| R801 | 1-216-057-00 | METAL CHIP | 2.2K | 5% | 1/10W | |
| R802 | 1-216-063-00 | METAL CHIP | 3.9K | 5% | 1/10W | |
| R803 | 1-216-077-00 | METAL CHIP | 15K | 5% | 1/10W | |
| R804 | 1-216-073-00 | METAL CHIP | 10K | 5% | 1/10W | |
| R805 | 1-216-097-00 | METAL CHIP | 100K | 5% | 1/10W | |
| R806 | 1-216-063-00 | METAL CHIP | 3.9K | 5% | 1/10W | |
| R807 | 1-216-074-00 | METAL CHIP | 11K | 5% | 1/10W | |
| R808 | 1-216-049-00 | METAL CHIP | 1K | 5% | 1/10W | |
| R809 | 1-216-041-00 | METAL CHIP | 470 | 5% | 1/10W | |
| R821 | 1-216-057-00 | METAL CHIP | 2.2K | 5% | 1/10W | |
| R822 | 1-216-063-00 | METAL CHIP | 3.9K | 5% | 1/10W | |
| R823 | 1-216-077-00 | METAL CHIP | 15K | 5% | 1/10W | |
| R824 | 1-216-073-00 | METAL CHIP | 10K | 5% | 1/10W | |
| R825 | 1-216-097-00 | METAL CHIP | 100K | 5% | 1/10W | |
| R826 | 1-216-063-00 | METAL CHIP | 3.9K | 5% | 1/10W | |
| R827 | 1-216-074-00 | METAL CHIP | 11K | 5% | 1/10W | |
| R828 | 1-216-049-00 | METAL CHIP | 1K | 5% | 1/10W | |
| R829 | 1-216-041-00 | METAL CHIP | 470 | 5% | 1/10W | |
| R901 | 1-216-073-00 | METAL CHIP | 10K | 5% | 1/10W | |
| R902 | 1-216-073-00 | METAL CHIP | 10K | 5% | 1/10W | |
| R904 | 1-216-089-00 | METAL CHIP | 47K | 5% | 1/10W | |
| R905 | 1-216-089-00 | METAL CHIP | 47K | 5% | 1/10W | |
| R906 | 1-216-081-00 | METAL CHIP | 22K | 5% | 1/10W | |
| R907 | 1-216-073-00 | METAL CHIP | 10K | 5% | 1/10W | |
| R908 | 1-216-065-00 | METAL CHIP | 4.7K | 5% | 1/10W | |
| R909 | 1-216-089-00 | METAL CHIP | 47K | 5% | 1/10W | |
| R951 | 1-216-073-00 | METAL CHIP | 10K | 5% | 1/10W | |
| R952 | 1-216-073-00 | METAL CHIP | 10K | 5% | 1/10W | |

**********

*A-7068-021-A AF-20 BOARD, COMPLETE (IC501)
**********

CAPACITOR

| | | | | | |
|---|---|---|---|---|---|
| C501 | 1-163-021-00 | CERAMIC CHIP | 0.01MF | | 50V |
| C502 | 1-163-021-00 | CERAMIC CHIP | 0.01MF | | 50V |
| C503 | 1-163-137-00 | CERAMIC CHIP | 680PF | 10% | 50V |
| C504 | 1-124-465-00 | ELECT | 0.47MF | 20% | 50V |
| C505 | 1-163-145-00 | CERAMIC CHIP | 0.0015MF | 10% | 50V |
| C506 | 1-163-016-00 | CERAMIC CHIP | 0.0039MF | 10% | 50V |
| C507 | 1-163-125-00 | CERAMIC CHIP | 220PF | 5% | 50V |
| C508 | 1-163-013-00 | CERAMIC CHIP | 0.0022MF | 10% | 50V |
| C509 | 1-124-123-00 | ELECT | 100MF | 20% | 6.3V |
| C510 | 1-163-036-00 | CERAMIC CHIP | 0.068MF | | 50V |
| C511 | 1-163-021-00 | CERAMIC CHIP | 0.01MF | | 50V |
| C512 | 1-123-612-00 | ELECT | 2.2MF | 20% | 50V |
| C513 | 1-123-306-00 | ELECT | 47MF | 20% | 6.3V |
| C514 | 1-123-369-00 | ELECT | 4.7MF | 20% | 25V |
| C515 | 1-163-133-00 | CERAMIC CHIP | 470PF | 5% | 50V |
| C516 | 1-123-661-00 | ELECT | 100MF | 20% | 6.3V |
| C517 | 1-163-088-00 | CERAMIC CHIP | 5PF | 0.25PF | 50V |
| C518 | 1-163-017-00 | CERAMIC CHIP | 0.0047MF | 10% | 50V |

When indicating parts by reference number, please include the board name.

| Ref.No | Part No. | Description | | | Remark |
|---|---|---|---|---|---|
| C519 | 1-163-125-00 | CERAMIC CHIP | 220PF | 5% | 50V |
| C520 | 1-163-079-00 | CERAMIC CHIP | 0.039MF | 10% | 25V |
| C521 | 1-163-020-00 | CERAMIC CHIP | 0.0082MF | 10% | 50V |
| C522 | 1-163-137-00 | CERAMIC CHIP | 680PF | 10% | 50V |
| C523 | 1-124-255-00 | ELECT | 1MF | 20% | 50V |
| C524 | 1-124-462-00 | ELECT | 10MF | 20% | 16V |
| C525 | 1-123-617-00 | ELECT | 10MF | 20% | 16V |
| C526 | 1-124-638-11 | ELECT | 22MF | 20% | 6.3V |
| C527 | 1-123-661-00 | ELECT | 100MF | 20% | 6.3V |
| C528 | 1-123-611-00 | ELECT | 1MF | 20% | 50V |
| C529 | 1-123-380-00 | ELECT | 1MF | 20% | 50V |
| C530 | 1-163-021-00 | CERAMIC CHIP | 0.01MF | | 50V |
| C531 | 1-123-661-00 | ELECT | 100MF | 20% | 6.3V |
| C532 | 1-123-380-00 | ELECT | 1MF | 20% | 50V |
| C533 | 1-163-015-00 | CERAMIC CHIP | 0.0033MF | 10% | 50V |
| C534 | 1-163-109-00 | CERAMIC CHIP | 47PF | 5% | 50V |
| C535 | 1-163-013-00 | CERAMIC CHIP | 0.0022MF | 10% | 50V |
| C536 | 1-163-021-00 | CERAMIC CHIP | 0.01MF | | 50V |
| C539 | 1-163-088-00 | CERAMIC CHIP | 5PF | 0.25PF | 50V |

CONNECTOR

| | | |
|---|---|---|
| CN501 | *1-564-318-00 | PIN, BOARD TO BOARD 10P |
| CN502 | *1-564-318-00 | PIN, BOARD TO BOARD 10P |

IC

| | | |
|---|---|---|
| IC501 | 8-752-013-71 | IC CX20137A |

COIL

| | | |
|---|---|---|
| L501 | 1-408-948-00 | MICRO INDUCTOR 220UH |

TRANSISTOR

| | | |
|---|---|---|
| Q501 | 8-729-901-01 | TRANSISTOR DTC144EK |
| Q502 | 8-729-109-42 | TRANSISTOR 2SK94-X2 |
| Q503 | 8-729-901-00 | TRANSISTOR DTC124EK |

RESISTOR

| | | | | | |
|---|---|---|---|---|---|
| R501 | 1-216-065-00 | METAL CHIP | 4.7K | 5% | 1/10W |
| R502 | 1-216-065-00 | METAL CHIP | 4.7K | 5% | 1/10W |
| R503 | 1-216-065-00 | METAL CHIP | 4.7K | 5% | 1/10W |
| R504 | 1-216-121-00 | METAL CHIP | 1M | 5% | 1/10W |
| R505 | 1-216-107-00 | METAL CHIP | 270K | 5% | 1/10W |
| R506 | 1-249-416-11 | CARBON | 820 | 5% | 1/6W |
| R507 | 1-249-416-11 | CARBON | 820 | 5% | 1/6W |
| R508 | 1-216-097-00 | METAL CHIP | 100K | 5% | 1/10W |
| R509 | 1-216-075-00 | METAL CHIP | 12K | 5% | 1/10W |
| R510 | 1-216-063-00 | METAL CHIP | 3.9K | 5% | 1/10W |
| R511 | 1-216-057-00 | METAL CHIP | 2.2K | 5% | 1/10W |
| R512 | 1-216-045-00 | METAL CHIP | 680 | 5% | 1/10W |
| R513 | 1-216-059-00 | METAL CHIP | 2.7K | 5% | 1/10W |
| R514 | 1-216-061-00 | METAL CHIP | 3.3K | 5% | 1/10W |
| R515 | 1-216-061-00 | METAL CHIP | 3.3K | 5% | 1/10W |
| R516 | 1-216-059-00 | METAL CHIP | 2.7K | 5% | 1/10W |

| Ref.No | Part No. | Description | | | | Remark |
|---|---|---|---|---|---|---|
| R517 | 1-216-073-00 | METAL CHIP | 10K | 5% | 1/10W | |
| R518 | 1-216-087-00 | METAL CHIP | 39K | 5% | 1/10W | |
| R519 | 1-216-085-00 | METAL CHIP | 33K | 5% | 1/10W | |
| R520 | 1-216-121-00 | METAL CHIP | 1M | 5% | 1/10W | |
| R521 | 1-216-079-00 | METAL CHIP | 18K | 5% | 1/10W | |
| R522 | 1-216-097-00 | METAL CHIP | 100K | 5% | 1/10W | |
| R523 | 1-216-089-00 | METAL CHIP | 47K | 5% | 1/10W | |
| R524 | 1-216-083-00 | METAL CHIP | 27K | 5% | 1/10W | |
| R525 | 1-216-079-00 | METAL CHIP | 18K | 5% | 1/10W | |
| R526 | 1-216-079-00 | METAL CHIP | 18K | 5% | 1/10W | |
| R527 | 1-216-057-00 | METAL CHIP | 2.2K | 5% | 1/10W | |
| R528 | 1-216-059-00 | METAL CHIP | 2.7K | 5% | 1/10W | |
| R530 | 1-216-049-00 | METAL CHIP | 1K | 5% | 1/10W | |

VARIABLE RESISTOR

| | | |
|---|---|---|
| RV501 | 1-228-995-00 | RES, ADJ, CARBON 22K |
| RV503 | 1-228-994-00 | RES, ADJ, CARBON 10K |

**********

*A-7068-022-A AD-12 BOARD, COMPLETE (IC701)
**********

CAPASITOR

| | | | | | |
|---|---|---|---|---|---|
| C701 | 1-123-618-00 | ELECT | 22MF | 20% | 6.3V |
| C703 | 1-163-117-00 | CERAMIC CHIP | 100PF | 5% | 50V |
| C705 | 1-123-618-00 | ELECT | 22MF | 20% | 6.3V |
| C707 | 1-123-617-00 | ELECT | 10MF | 20% | 16V |
| C709 | 1-124-224-00 | ELECT | 47MF | 20% | 6.3V |
| C710 | 1-163-021-00 | CERAMIC CHIP | 0.01MF | | 50V |
| C713 | 1-123-661-00 | ELECT | 100MF | 20% | 6.3V |
| C715 | 1-123-661-00 | ELECT | 100MF | 20% | 6.3V |
| C716 | 1-123-617-00 | ELECT | 10MF | 20% | 16V |
| C717 | 1-123-661-00 | ELECT | 100MF | 20% | 6.3V |
| C718 | 1-102-978-00 | CERAMIC | 220PF | 5% | 50V |
| C719 | 1-163-021-00 | CERAMIC CHIP | 0.01MF | | 50V |
| C720 | 1-163-021-00 | CERAMIC CHIP | 0.01MF | | 50V |
| C721 | 1-124-224-00 | ELECT | 47MF | 20% | 6.3V |
| C722 | 1-163-021-00 | CERAMIC CHIP | 0.01MF | | 50V |
| C751 | 1-123-618-00 | ELECT | 22MF | 20% | 6.3V |
| C753 | 1-163-117-00 | CERAMIC CHIP | 100PF | 5% | 50V |
| C755 | 1-123-618-00 | ELECT | 22MF | 20% | 6.3V |
| C757 | 1-123-617-00 | ELECT | 10MF | 20% | 16V |

CONNECTOR

| | | |
|---|---|---|
| CN701 | 1-566-139-11 | CONNECTOR, BOARD TO BOARD 15P |

IC

| | | |
|---|---|---|
| IC701 | 8-752-322-57 | IC CXD1077M |
| IC702 | 8-759-914-44 | IC TL431CLPB |

COIL

| | | |
|---|---|---|
| L701 | 1-408-421-00 | MICRO INDUCTOR 100UH |

When indicating parts by reference number, please include the board name.

| Ref.No | Part No. | Description | | | | Remark |
|---|---|---|---|---|---|---|
| | | RESISTOR | | | | |
| R701 | 1-216-077-00 | METAL CHIP | 15K | 5% | 1/10W | |
| R703 | 1-216-087-00 | METAL CHIP | 39K | 5% | 1/10W | |
| R711 | 1-216-057-00 | METAL CHIP | 2.2K | 5% | 1/10W | |
| R713 | 1-216-057-00 | METAL CHIP | 2.2K | 5% | 1/10W | |
| R717 | 1-216-117-00 | METAL CHIP | 680K | 5% | 1/10W | |
| R718 | 1-216-029-00 | METAL CHIP | 150 | 5% | 1/10W | |
| R719 | 1-216-022-00 | METAL CHIP | 75 | 5% | 1/10W | |
| R720 | 1-216-039-00 | METAL CHIP | 390 | 5% | 1/10W | |
| R721 | 1-216-049-00 | METAL CHIP | 1K | 5% | 1/10W | |
| R722 | 1-216-653-11 | METAL CHIP | 1.2K | 0.50% | 1/16W | |
| R723 | 1-216-661-11 | METAL CHIP | 2.7K | 0.50% | 1/16W | |
| R724 | 1-215-485-00 | METAL | 470K | 1% | 1/6W | |
| R751 | 1-216-077-00 | METAL CHIP | 15K | 5% | 1/10W | |
| R753 | 1-216-087-00 | METAL CHIP | 39K | 5% | 1/10W | |
| R761 | 1-216-057-00 | METAL CHIP | 2.2K | 5% | 1/10W | |
| R763 | 1-216-057-00 | METAL CHIP | 2.2K | 5% | 1/10W | |
| | | VARIABLE RESISTOR | | | | |
| RV701 | 1-228-995-00 | RES, ADJ, CARBON 22K | | | | |
| RV703 | 1-228-991-00 | RES, ADJ, CARBON 2.2K | | | | |
| RV705 | 1-228-999-00 | RES, ADJ, CARBON 470K | | | | |
| RV751 | 1-228-995-00 | RES, ADJ, CARBON 22K | | | | |
| RV753 | 1-228-991-00 | RES, ADJ, CARBON 2.2K | | | | |

**********

*A-7068-025-A NR-6 BAORD, COMPLETE (IC601)
**********

| | | | | | | |
|---|---|---|---|---|---|---|
| | | CAPACITOR | | | | |
| C601 | 1-123-661-00 | ELECT | 100MF | 20% | 6.3V | |
| C602 | 1-123-306-00 | ELECT | 47MF | 20% | 10V | |
| C603 | 1-123-661-00 | ELECT | 100MF | 20% | 6.3V | |
| C604 | 1-123-661-00 | ELECT | 100MF | 20% | 6.3V | |
| C605 | 1-130-490-11 | MYLAR | 0.039MF | 5% | 50V | |
| C606 | 1-163-125-00 | CERAMIC CHIP | 220PF | 10% | 50V | |
| C607 | 1-163-088-00 | CERAMIC CHIP | 5PF | 0.25PF | 50V | |
| C608 | 1-130-479-00 | MYLAR | 0.0047MF | 5% | 50V | |
| C609 | 1-163-020-00 | CERAMIC CHIP | 0.0082MF | 10% | 50V | |
| C610 | 1-123-612-00 | ELECT | 2.2MF | 20% | 50V | |
| C611 | 1-163-137-00 | CERAMIC CHIP | 680PF | 10% | 50V | |
| C612 | 1-127-482-11 | ELECT(SOLID) | 10MF | 20% | 6.3V | |
| C613 | 1-127-502-00 | ELECT(SOLID) | 0.22MF | 20% | 25V | |
| C614 | 1-123-330-00 | ELECT | 22MF | 20% | 10V | |
| C615 | 1-163-141-00 | CERAMIC CHIP | 0.001MF | 10% | 50V | |
| C616 | 1-123-661-00 | ELECT | 100MF | 20% | 6.3V | |
| C617 | 1-163-141-00 | CERAMIC CHIP | 0.001MF | 10% | 50V | |
| C618 | 1-123-661-00 | ELECT | 100MF | 20% | 6.3V | |
| C651 | 1-123-661-00 | ELECT | 100MF | 20% | 6.3V | |
| C652 | 1-123-306-00 | ELECT | 47MF | 20% | 10V | |
| C653 | 1-123-661-00 | ELECT | 100MF | 20% | 6.3V | |
| C654 | 1-123-661-00 | ELECT | 100MF | 20% | 6.3V | |
| C655 | 1-130-490-11 | MYLAR | 0.039MF | 5% | 50V | |
| C656 | 1-163-125-00 | CERAMIC CHIP | 220PF | 10% | 50V | |
| C657 | 1-163-088-00 | CERAMIC CHIP | 5PF | 0.25PF | 50V | |
| C658 | 1-130-479-00 | MYLAR | 0.0047MF | 5% | 50V | |
| C659 | 1-163-020-00 | CERAMIC CHIP | 0.0082MF | 10% | 50V | |
| C660 | 1-123-612-00 | ELECT | 2.2MF | 20% | 50V | |
| C661 | 1-163-137-00 | CERAMIC CHIP | 680PF | 10% | 50V | |
| C662 | 1-127-482-11 | ELECT(SOLID) | 10MF | 20% | 6.3V | |
| C663 | 1-127-502-00 | ELECT(SOLID) | 0.22MF | 20% | 25V | |
| C664 | 1-123-330-00 | ELECT | 22MF | 20% | 10V | |
| | | IC | | | | |
| IC601 | 8-752-009-90 | IC CX20099 | | | | |
| | | RESISTOR | | | | |
| R600 | 1-216-025-00 | METAL CHIP | 100 | 5% | 1/10W | |
| R601 | 1-216-073-00 | METAL CHIP | 10K | 5% | 1/10W | |
| R602 | 1-216-073-00 | METAL CHIP | 10K | 5% | 1/10W | |
| R603 | 1-216-009-00 | METAL CHIP | 22 | 5% | 1/10W | |
| R604 | 1-216-059-00 | METAL CHIP | 2.7K | 5% | 1/10W | |
| R605 | 1-216-057-00 | METAL CHIP | 2.2K | 5% | 1/10W | |
| R606 | 1-216-045-00 | METAL CHIP | 680 | 5% | 1/10W | |
| R607 | 1-216-083-00 | METAL CHIP | 27K | 5% | 1/10W | |
| R608 | 1-216-063-00 | METAL CHIP | 3.9K | 5% | 1/10W | |
| R609 | 1-216-061-00 | METAL CHIP | 3.3K | 5% | 1/10W | |
| R610 | 1-216-059-00 | METAL CHIP | 2.7K | 5% | 1/10W | |
| R611 | 1-216-061-00 | METAL CHIP | 3.3K | 5% | 1/10W | |
| R612 | 1-216-065-00 | METAL CHIP | 4.7K | 5% | 1/10W | |
| R613 | 1-216-072-00 | METAL CHIP | 9.1K | 5% | 1/10W | |
| R614 | 1-216-073-00 | METAL CHIP | 10K | 5% | 1/10W | |
| R617 | 1-216-081-00 | METAL CHIP | 22K | 5% | 1/10W | |
| R650 | 1-216-025-00 | METAL CHIP | 100 | 5% | 1/10W | |
| R651 | 1-216-073-00 | METAL CHIP | 10K | 5% | 1/10W | |
| R652 | 1-216-073-00 | METAL CHIP | 10K | 5% | 1/10W | |
| R653 | 1-216-009-00 | METAL CHIP | 22 | 5% | 1/10W | |
| R654 | 1-216-059-00 | METAL CHIP | 2.7K | 5% | 1/10W | |
| R655 | 1-216-057-00 | METAL CHIP | 2.2K | 5% | 1/10W | |
| R656 | 1-216-045-00 | METAL CHIP | 680 | 5% | 1/10W | |
| R657 | 1-216-083-00 | METAL CHIP | 27K | 5% | 1/10W | |
| R658 | 1-216-063-00 | METAL CHIP | 3.9K | 5% | 1/10W | |
| R659 | 1-216-061-00 | METAL CHIP | 3.3K | 5% | 1/10W | |
| R660 | 1-216-059-00 | METAL CHIP | 2.7K | 5% | 1/10W | |
| R661 | 1-216-061-00 | METAL CHIP | 3.3K | 5% | 1/10W | |
| R662 | 1-216-065-00 | METAL CHIP | 4.7K | 5% | 1/10W | |
| R667 | 1-216-081-00 | METAL CHIP | 22K | 5% | 1/10W | |
| | | PIN BOARD | | | | |
| W601 | *1-566-099-11 | PIN, BOARD TO BOARD 15P | | | | |

**********

When indicating parts by reference number, please include the board name.

| Ref.No | Part No. | Description | | | Remark |
|---|---|---|---|---|---|
| | *A-7068-032-A | MK-2 BOARD, COMPLETE | | | |
| | | ********** | | | |
| | | CAPACITOR | | | |
| C807 | 1-130-487-00 | MYLAR | 0.022MF | 5% | 50V |
| C808 | 1-130-487-00 | MYLAR | 0.022MF | 5% | 50V |
| C809 | 1-130-467-00 | MYLAR | 470PF | 5% | 50V |
| C810 | 1-130-471-00 | FILM | 0.001MF | 5% | 50V |
| C827 | 1-130-487-00 | MYLAR | 0.022MF | 5% | 50V |
| C828 | 1-130-487-00 | MYLAR | 0.022MF | 5% | 50V |
| C829 | 1-130-467-00 | MYLAR | 470PF | 5% | 50V |
| C830 | 1-130-471-00 | FILM | 0.001MF | 5% | 50V |
| C843 | 1-124-892-11 | ELECT | 47MF | 20% | 10V |
| C850 | 1-101-005-00 | CERAMIC | 0.022MF | | 50V |
| C852 | 1-102-973-00 | CERAMIC | 100PF | 5% | 50V |
| | | CONNECTOR | | | |
| CN802 | *1-564-318-00 | PIN, BOARD TO BOARD 10P | | | |
| | | IC | | | |
| IC801 | 8-759-913-62 | IC IR3N05 | | | |
| IC821 | 8-759-913-62 | IC IR3N05 | | | |
| IC851 | 8-759-206-68 | IC TC40103BP | | | |
| | | COIL | | | |
| L801 | 1-408-421-00 | MICRO INDUCTOR 100UH | | | |
| | | TRANSISTOR | | | |
| Q851 | 8-729-178-54 | TRANSISTOR 2SC2785 | | | |
| | | RESISTOR | | | |
| R810 | 1-249-423-11 | CARBON | 3.3K 5% | | 1/6W |
| R811 | 1-249-428-11 | CARBON | 8.2K 5% | | 1/6W |
| R812 | 1-249-436-11 | CARBON | 39K 5% | | 1/6W |
| R830 | 1-249-423-11 | CARBON | 3.3K 5% | | 1/6W |
| R831 | 1-249-428-11 | CARBON | 8.2K 5% | | 1/6W |
| R851 | 1-249-435-11 | CARBON | 33K 5% | | 1/6W |
| R852 | 1-249-435-11 | CARBON | 33K 5% | | 1/6W |
| R853 | 1-249-441-11 | CARBON | 100K 5% | | 1/6W |
| | | VARIABLE RESISTOR | | | |
| RV801 | 1-228-990-00 | RES, ADJ, METAL GLAZE 1K | | | |
| RV821 | 1-228-990-00 | RES, ADJ, METAL GLAZE 1K | | | |

**********

| | | |
|---|---|---|
| *A-7060-469-A | VI-20 BOARD, COMPLETE (WG MODEL) | |
| | ********** | |
| *A-7060-792-A | VI-20 BOARD, COMPLETE (AEP MODEL) | |
| | ********** | |
| | (Including the CH-44 board(IC010), BS6324(IC011) and BS7443(IC012)) | |

| Ref.No | Part No. | Description | | | Remark |
|---|---|---|---|---|---|
| | *3-703-353-07 | SUPPORT, PC BOARD | | | |
| | | CAPACITOR | | | |
| C003 | 1-124-468-11 | ELECT | 100MF | 20% | 6.3V |
| C004 | 1-163-117-00 | CERAMIC CHIP | 100PF | 5% | 50V |
| C005 | 1-123-619-00 | ELECT | 4.7MF | 20% | 50V |
| C007 | 1-163-093-00 | CERAMIC CHIP | 10PF | 5% | 50V |
| C008 | 1-124-907-00 | ELECT | 10MF | 20% | 50V |
| C009 | 1-163-075-00 | CERAMIC CHIP | 0.047MF | | 50V |
| C010 | 1-163-109-00 | CERAMIC CHIP | 47PF | 5% | 50V |
| C011 | 1-163-118-00 | CERAMIC CHIP | 110PF | 5% | 50V |
| C012 | 1-163-119-00 | CERAMIC CHIP | 120PF | 5% | 50V |
| C014 | 1-163-117-00 | CERAMIC CHIP | 100PF | 5% | 50V |
| C015 | 1-163-129-00 | CERAMIC CHIP | 330PF | 5% | 50V |
| C016 | 1-124-247-00 | ELECT | 10MF | 20% | 25V |
| C017 | 1-163-075-00 | CERAMIC CHIP | 0.047MF | | 50V |
| C026 | 1-163-123-00 | CERAMIC CHIP | 180PF | 5% | 50V |
| C027 | 1-163-123-00 | CERAMIC CHIP | 180PF | 5% | 50V |
| C028 | 1-163-102-00 | CERAMIC CHIP | 24PF | 5% | 50V |
| C029 | 1-163-075-00 | CERAMIC CHIP | 0.047MF | | 50V |
| C030 | 1-124-907-00 | ELECT | 10MF | 20% | 50V |
| C032 | 1-163-103-00 | CERAMIC CHIP | 27PF | 5% | 50V |
| C033 | 1-163-115-00 | CERAMIC CHIP | 82PF | 5% | 50V |
| C034 | 1-163-119-00 | CERAMIC CHIP | 120PF | 5% | 50V |
| C035 | 1-163-103-00 | CERAMIC CHIP | 27PF | 5% | 50V |
| C036 | 1-163-077-00 | CERAMIC CHIP | 0.1MF | | 50V |
| C037 | 1-163-133-00 | CERAMIC CHIP | 470PF | 5% | 50V |
| C038 | 1-163-075-00 | CERAMIC CHIP | 0.047MF | | 50V |
| C039 | 1-163-077-00 | CERAMIC CHIP | 0.1MF | | 50V |
| C040 | 1-163-141-00 | CERAMIC CHIP | 0.001MF | 10% | 50V |
| C041 | 1-163-075-00 | CERAMIC CHIP | 0.047MF | | 50V |
| C042 | 1-124-907-00 | ELECT | 10MF | 20% | 50V |
| C043 | 1-124-247-00 | ELECT | 10MF | 20% | 25V |
| C044 | 1-124-907-00 | ELECT | 10MF | 20% | 50V |
| C045 | 1-163-075-00 | CERAMIC CHIP | 0.047MF | | 50V |
| C046 | 1-124-903-00 | ELECT | 1MF | 20% | 50V |
| C047 | 1-124-927-11 | ELECT | 4.7MF | 20% | 50V |
| C048 | 1-124-442-00 | ELECT | 330MF | 20% | 6.3V |
| C049 | 1-163-075-00 | CERAMIC CHIP | 0.047MF | | 50V |
| C050 | 1-124-927-11 | ELECT | 4.7MF | 20% | 50V |
| C051 | 1-124-908-11 | ELECT | 22MF | 20% | 25V |
| C053 | 1-163-119-00 | CERAMIC CHIP | 120PF | 5% | 50V |
| C054 | 1-124-907-00 | ELECT | 10MF | 20% | 50V |
| C055 | 1-163-113-00 | CERAMIC CHIP | 68PF | 5% | 50V |
| C056 | 1-163-141-00 | CERAMIC CHIP | 0.001MF | 10% | 50V |
| C057 | 1-163-113-00 | CERAMIC CHIP | 68PF | 5% | 50V |
| C058 | 1-163-075-00 | CERAMIC CHIP | 0.047MF | | 50V |
| C060 | 1-163-092-00 | CERAMIC CHIP | 9PF | 0.25PF | 50V |
| C061 | 1-163-077-00 | CERAMIC CHIP | 0.1MF | | 50V |
| C062 | 1-163-075-00 | CERAMIC CHIP | 0.047MF | | 50V |
| C063 | 1-163-075-00 | CERAMIC CHIP | 0.047MF | | 50V |
| C064 | 1-124-464-11 | ELECT | 0.22MF | 20% | 50V |
| C065 | 1-124-907-00 | ELECT | 10MF | 20% | 50V |

When indicating parts by reference number, please include the board name.

| Ref.No | Part No. | Description | | | Remark |
|---|---|---|---|---|---|
| C066 | 1-163-129-00 | CERAMIC CHIP | 330PF | 5% | 50V |
| C100 | 1-163-101-00 | CERAMIC CHIP | 22PF | 5% | 50V |
| C101 | 1-163-129-00 | CERAMIC CHIP | 330PF | 5% | 50V |
| C102 | 1-163-093-00 | CERAMIC CHIP | 10PF | 5% | 50V |
| C104 | 1-163-105-00 | CERAMIC CHIP | 33PF | 5% | 50V |
| C105 | 1-163-129-00 | CERAMIC CHIP | 330PF | 5% | 50V |
| C106 | 1-163-111-00 | CERAMIC CHIP | 56PF | 5% | 50V |
| C107 | 1-124-908-11 | ELECT | 22MF | 20% | 25V |
| C110 | 1-163-107-00 | CERAMIC CHIP | 39PF | 5% | 50V |
| C111 | 1-163-107-00 | CERAMIC CHIP | 39PF | 5% | 50V |
| C112 | 1-163-111-00 | CERAMIC CHIP | 56PF | 5% | 50V |
| C113 | 1-163-097-00 | CERAMIC CHIP | 15PF | 5% | 50V |
| C114 | 1-163-075-00 | CERAMIC CHIP | 0.047MF | | 50V |
| C115 | 1-163-092-00 | CERAMIC CHIP | 9PF | 0.25PF | 50V |
| C116 | 1-124-908-11 | ELECT | 22MF | 20% | 25V |
| C117 | 1-163-127-00 | CERAMIC CHIP | 270PF | 5% | 50V |
| C201 | 1-163-141-00 | CERAMIC CHIP | 0.001MF | 10% | 50V |
| C202 | 1-163-075-00 | CERAMIC CHIP | 0.047MF | | 50V |
| C203 | 1-163-021-00 | CERAMIC CHIP | 0.01MF | | 50V |
| C204 | 1-163-101-00 | CERAMIC CHIP | 22PF | 5% | 50V |
| C205 | 1-163-111-00 | CERAMIC CHIP | 56PF | 5% | 50V |
| C206 | 1-124-257-00 | ELECT | 2.2MF | 20% | 35V |
| C207 | 1-163-121-00 | CERAMIC CHIP | 150PF | 5% | 50V |
| C208 | 1-123-619-00 | ELECT | 4.7MF | 20% | 50V |
| C209 | 1-163-111-00 | CERAMIC CHIP | 56PF | 5% | 50V |
| C210 | 1-163-133-00 | CERAMIC CHIP | 470PF | 5% | 50V |
| C211 | 1-163-075-00 | CERAMIC CHIP | 0.047MF | | 50V |
| C212 | 1-124-904-00 | ELECT | 2.2MF | 20% | 50V |
| C213 | 1-124-907-00 | ELECT | 10MF | 20% | 50V |
| C215 | 1-124-927-11 | ELECT | 4.7MF | 20% | 50V |
| C216 | 1-163-101-00 | CERAMIC CHIP | 22PF | 5% | 50V |
| C217 | 1-163-113-00 | CERAMIC CHIP | 68PF | 5% | 50V |
| C218 | 1-163-121-00 | CERAMIC CHIP | 150PF | 5% | 50V |
| C219 | 1-163-101-00 | CERAMIC CHIP | 22PF | 5% | 50V |
| C220 | 1-124-892-11 | ELECT | 47MF | 20% | 10V |
| C221 | 1-163-115-00 | CERAMIC CHIP | 82PF | 5% | 50V |
| C222 | 1-163-103-00 | CERAMIC CHIP | 27PF | 5% | 50V |
| C223 | 1-163-115-00 | CERAMIC CHIP | 82PF | 5% | 50V |
| C224 | 1-163-101-00 | CERAMIC CHIP | 22PF | 5% | 50V |
| C225 | 1-163-021-00 | CERAMIC CHIP | 0.01MF | | 50V |
| C226 | 1-163-021-00 | CERAMIC CHIP | 0.01MF | | 50V |
| C227 | 1-163-101-00 | CERAMIC CHIP | 22PF | 5% | 50V |
| C228 | 1-163-111-00 | CERAMIC CHIP | 56PF | 5% | 50V |
| C229 | 1-124-462-00 | ELECT | 10MF | 20% | 16V |
| C230 | 1-163-141-00 | CERAMIC CHIP | 0.001MF | 10% | 50V |
| C236 | 1-124-462-00 | ELECT | 10MF | 20% | 16V |
| C237 | 1-163-075-00 | CERAMIC CHIP | 0.047MF | | 50V |
| C238 | 1-124-468-11 | ELECT | 100MF | 20% | 6.3V |
| C239 | 1-163-075-00 | CERAMIC CHIP | 0.047MF | | 50V |
| C240 | 1-163-141-00 | CERAMIC CHIP | 0.001MF | 10% | 50V |
| C241 | 1-163-075-00 | CERAMIC CHIP | 0.047MF | | 50V |
| C242 | 1-124-908-11 | ELECT | 22MF | 20% | 25V |
| C243 | 1-124-908-11 | ELECT | 22MF | 20% | 25V |

| Ref.No | Part No. | Description | | | Remark |
|---|---|---|---|---|---|
| C244 | 1-163-075-00 | CERAMIC CHIP | 0.047MF | | 50V |
| C250 | 1-163-101-00 | CERAMIC CHIP | 22PF | 5% | 50V |
| C251 | 1-163-137-00 | CERAMIC CHIP | 680PF | 5% | 50V |
| C252 | 1-124-927-11 | ELECT | 4.7MF | 20% | 50V |
| C253 | 1-163-075-00 | CERAMIC CHIP | 0.047MF | | 50V |
| C254 | 1-163-075-00 | CERAMIC CHIP | 0.047MF | | 50V |
| C255 | 1-124-907-00 | ELECT | 10MF | 20% | 50V |
| C260 | 1-163-075-00 | CERAMIC CHIP | 0.047MF | | 50V |
| C261 | 1-163-141-00 | CERAMIC CHIP | 0.001MF | 10% | 50V |
| C262 | 1-163-141-00 | CERAMIC CHIP | 0.001MF | 10% | 50V |
| C263 | 1-163-117-00 | CERAMIC CHIP | 100PF | 5% | 50V |
| C264 | 1-163-109-00 | CERAMIC CHIP | 47PF | 5% | 50V |
| C265 | 1-124-927-11 | ELECT | 4.7MF | 20% | 50V |
| C266 | 1-163-075-00 | CERAMIC CHIP | 0.047MF | | 50V |
| C267 | 1-163-109-00 | CERAMIC CHIP | 47PF | 5% | 50V |
| C268 | 1-124-462-00 | ELECT | 10MF | 20% | 16V |
| C301 | 1-163-075-00 | CERAMIC CHIP | 0.047MF | | 50V |
| C302 | 1-163-109-00 | CERAMIC CHIP | 47PF | 5% | 50V |
| C303 | 1-163-017-00 | CERAMIC CHIP | 0.0047MF | 10% | 50V |
| C304 | 1-163-113-00 | CERAMIC CHIP | 68PF | 5% | 50V |
| C305 | 1-163-129-00 | CERAMIC CHIP | 330PF | 5% | 50V |
| C306 | 1-163-129-00 | CERAMIC CHIP | 330PF | 5% | 50V |
| C307 | 1-163-021-00 | CERAMIC CHIP | 0.01MF | | 50V |
| C308 | 1-163-141-00 | CERAMIC CHIP | 0.001MF | 10% | 50V |
| C309 | 1-163-021-00 | CERAMIC CHIP | 0.01MF | | 50V |
| C310 | 1-163-118-00 | CERAMIC CHIP | 110PF | 5% | 50V |
| C311 | 1-124-907-00 | ELECT | 10MF | 20% | 50V |
| C312 | 1-163-075-00 | CERAMIC CHIP | 0.047MF | | 50V |
| C313 | 1-163-141-00 | CERAMIC CHIP | 0.001MF | 5% | 50V |
| C314 | 1-163-141-00 | CERAMIC CHIP | 0.001MF | 10% | 50V |
| C315 | 1-124-904-00 | ELECT | 2.2MF | 20% | 50V |
| C316 | 1-163-019-00 | CERAMIC CHIP | 0.0068MF | 10% | 50V |
| C317 | 1-124-905-11 | ELECT | 3.3MF | 20% | 50V |
| C318 | 1-163-141-00 | CERAMIC CHIP | 0.001MF | 10% | 50V |
| C319 | 1-163-093-00 | CERAMIC CHIP | 10PF | 5% | 50V |
| C320 | 1-163-021-00 | CERAMIC CHIP | 0.01MF | | 50V |
| C321 | 1-163-145-00 | CERAMIC CHIP | 0.0015MF | 10% | 50V |
| C322 | 1-163-141-00 | CERAMIC CHIP | 0.001MF | 10% | 50V |
| C323 | 1-124-907-00 | ELECT | 10MF | 20% | 50V |
| C324 | 1-163-077-00 | CERAMIC CHIP | 0.1MF | | 50V |
| C325 | 1-163-105-00 | CERAMIC CHIP | 33PF | 5% | 50V |
| C326 | 1-163-117-00 | CERAMIC CHIP | 100PF | 5% | 50V |
| C327 | 1-163-109-00 | CERAMIC CHIP | 47PF | 5% | 50V |
| C328 | 1-163-113-00 | CERAMIC CHIP | 68PF | 5% | 50V |
| C329 | 1-163-141-00 | CERAMIC CHIP | 0.001MF | 10% | 50V |
| C330 | 1-163-125-00 | CERAMIC CHIP | 220PF | 5% | 50V |
| C331 | 1-163-111-00 | CERAMIC CHIP | 56PF | 5% | 50V |
| C332 | 1-163-141-00 | CERAMIC CHIP | 0.001MF | 10% | 50V |
| C414 | 1-124-907-00 | ELECT | 10MF | 20% | 50V (WG MODEL) |
| C415 | 1-163-127-00 | CERAMIC CHIP | 270PF | 5% | 50V |
| C417 | 1-130-473-00 | MYLAR | 0.0015MF | 5% | 50V |
| C418 | 1-124-908-11 | ELECT | 22MF | 20% | 25V (WG MODEL) |
| C419 | 1-124-927-11 | ELECT | 4.7MF | 20% | 50V (AEP MODEL) |

When indicating parts by reference number, please include the board name.

| Ref.No | Part No. | Description | | Remark |
|---|---|---|---|---|
| C424 | 1-163-021-00 | CERAMIC CHIP 0.01MF | | 50V |
| C425 | 1-124-907-00 | ELECT 10MF | 20% | 50V |
| C426 | 1-163-021-00 | CERAMIC CHIP 0.01MF | | 50V |
| C427 | 1-163-063-00 | CERAMIC CHIP 0.022MF | | 50V |
| C428 | 1-163-075-00 | CERAMIC CHIP 0.047MF | | 50V |
| C429 | 1-163-063-00 | CERAMIC CHIP 0.022MF | | 50V |
| C430 | 1-163-021-00 | CERAMIC CHIP 0.01MF | | 50V |
| C433 | 1-124-907-00 | ELECT 10MF | 20% | 50V |
| C434 | 1-124-907-00 | ELECT 10MF | 20% | 50V |
| C437 | 1-124-907-00 | ELECT 10MF | 20% | 50V |
| C438 | 1-124-908-11 | ELECT 22MF | 20% | 25V |
| C440 | 1-124-908-11 | ELECT 22MF | 20% | 25V |
| C445 | 1-163-077-00 | CERAMIC CHIP 0.1MF | | 50V |
| C446 | 1-124-892-11 | ELECT 47MF | 20% | 10V |
| C450 | 1-124-471-00 | ELECT 1000MF | 20% | 6.3V |
| C451 | 1-124-443-00 | ELECT 100MF | 20% | 10V |
| C452 | 1-163-021-00 | CERAMIC CHIP 0.01MF | | 50V |
| C455 | 1-163-115-00 | CERAMIC CHIP 82PF | 5% | 50V |
| C456 | 1-124-908-11 | ELECT 22MF | 20% | 25V |

CONNECTOR

| | | |
|---|---|---|
| CN003 | *1-564-007-00 | PIN, CONNECTOR 8P |
| CN007 | *1-564-006-11 | PIN, CONNECTOR 7P |
| CN009 | *1-564-027-00 | PIN, CONNECTOR 2P (AEP MODEL) |
| CN009 | *1-564-028-00 | PIN, CONNECTOR 3P (WG MODEL) |
| CN010 | *1-560-893-00 | PIN, CONNECTOR 5P |
| CN011 | *1-564-001-11 | PIN, CONNECTOR 2P (WG MODEL) |
| CN012 | *1-564-003-00 | PIN, CONNECTOR 4P (WG MODEL) |
| CN013 | *1-564-014-00 | PIN, CONNECTOR 4P (WG MODEL) |

JACK

| | | |
|---|---|---|
| CNJ001 | 1-561-534-82 | SOCKET 21P |
| CNJ002 | 1-507-945-21 | JACK, PIN 1P |
| CNJ003 | 1-507-945-21 | JACK, PIN 1P |

DIODE

| | | |
|---|---|---|
| D004 | 8-719-100-03 | DIODE 1S2835 |
| D005 | 8-719-101-23 | DIODE 1SS123-T1 |
| D100 | 8-719-100-03 | DIODE 1S2835 (AEP MODEL) |
| D202 | 8-719-100-05 | DIODE 1S2837-T1 |
| D204 | 8-719-101-23 | DIODE 1SS123 |
| D205 | 8-719-100-03 | DIODE 1S2835 |
| D206 | 8-719-101-23 | DIODE 1SS123 |
| D301 | 8-719-100-05 | DIODE 1S2837 |
| D302 | 8-719-101-23 | DIODE 1SS123 |
| D303 | 8-719-101-23 | DIODE 1SS123 |
| D304 | 8-719-101-23 | DIODE 1SS123 |
| D305 | 8-719-100-03 | DIODE 1S2835 |
| D402 | 8-719-100-05 | DIODE 1S2837 (WG MODEL) |
| D403 | 8-719-106-08 | DIODE RD6.2M-B2 |
| D410 | 8-719-106-22 | DIODE RD7.5M-B1 |
| D411 | 8-719-106-22 | DIODE RD7.5M-B1 |
| D412 | 8-719-106-22 | DIODE RD7.5M-B1 |
| D413 | 8-719-106-22 | DIODE RD7.5M-B1 |
| D414 | 8-719-106-22 | DIODE RD7.5M-B1 |
| D415 | 8-719-106-22 | DIODE RD7.5M-B1 |
| D416 | 8-719-106-22 | DIODE RD7.5M-B1 |
| D417 | 8-719-106-22 | DIODE RD7.5M-B1 |
| D418 | 8-719-106-22 | DIODE RD7.5M-B1 |
| D419 | 8-719-106-22 | DIODE RD7.5M-B1 |

DELAY LINE

| | | |
|---|---|---|
| DL001 | 1-415-282-00 | DELAY LINE |
| DL002 | 1-415-386-21 | DELAY LINE, 1H (13.3MHZ) |

IC

| | | |
|---|---|---|
| IC001 | 8-752-013-00 | IC CX20130 |
| IC002 | 8-752-013-10 | IC CX20131 |
| IC003 | 8-759-913-64 | IC CX23064 |
| IC004 | 8-759-927-52 | IC BA7036LS |
| IC005 | 8-759-202-68 | IC CX20147 |
| IC007 | 8-752-006-10 | IC CX20061 (WG MODEL) |
| IC010 | *A-7068-030-A | CH-44 BOARD, COMPLETE |
| IC011 | 1-807-844-11 | IC BS6324 |
| IC012 | 1-807-846-11 | IC BS7443 |

JUMPER RESISTOR

| | | | | | |
|---|---|---|---|---|---|
| JR001 | 1-216-295-00 | METAL CHIP | 0 | 5% | 1/10W |
| JR002 | 1-216-295-00 | METAL CHIP | 0 | 5% | 1/10W |
| JR003 | 1-216-295-00 | METAL CHIP | 0 | 5% | 1/10W |
| JR004 | 1-216-295-00 | METAL CHIP | 0 | 5% | 1/10W |
| JR005 | 1-216-295-00 | METAL CHIP | 0 | 5% | 1/10W |
| JR006 | 1-216-295-00 | METAL CHIP | 0 | 5% | 1/10W |
| JR007 | 1-216-295-00 | METAL CHIP | 0 | 5% | 1/10W |
| JR008 | 1-216-295-00 | METAL CHIP | 0 | 5% | 1/10W |
| JR009 | 1-216-295-00 | METAL CHIP | 0 | 5% | 1/10W |
| JR010 | 1-216-295-00 | METAL CHIP | 0 | 5% | 1/10W |
| JR011 | 1-216-295-00 | METAL CHIP | 0 | 5% | 1/10W |
| JR012 | 1-216-295-00 | METAL CHIP | 0 | 5% | 1/10W |
| JR013 | 1-216-295-00 | METAL CHIP | 0 | 5% | 1/10W |
| JR014 | 1-216-295-00 | METAL CHIP | 0 | 5% | 1/10W |
| JR015 | 1-216-295-00 | METAL CHIP | 0 | 5% | 1/10W |
| JR016 | 1-216-295-00 | METAL CHIP | 0 | 5% | 1/10W |
| JR018 | 1-216-295-00 | METAL CHIP | 0 | 5% | 1/10W |
| JR019 | 1-216-295-00 | METAL CHIP | 0 | 5% | 1/10W |
| JR020 | 1-216-295-00 | METAL CHIP | 0 | 5% | 1/10W |
| JR021 | 1-216-295-00 | METAL CHIP | 0 | 5% | 1/10W |
| JR022 | 1-216-295-00 | METAL CHIP | 0 | 5% | 1/10W |
| JR023 | 1-216-295-00 | METAL CHIP | 0 | 5% | 1/10W |
| JR024 | 1-216-295-00 | METAL CHIP | 0 | 5% | 1/10W |
| JR025 | 1-216-295-00 | METAL CHIP | 0 | 5% | 1/10W |
| JR026 | 1-216-295-00 | METAL CHIP | 0 | 5% | 1/10W |
| JR027 | 1-216-295-00 | METAL CHIP | 0 | 5% | 1/10W |
| JR028 | 1-216-295-00 | METAL CHIP | 0 | 5% | 1/10W |
| JR029 | 1-216-295-00 | METAL CHIP | 0 | 5% | 1/10W |
| JR030 | 1-216-295-00 | METAL CHIP | 0 | 5% | 1/10W |

When indicating parts by reference number, please include the board name.

| Ref.No | Part No. | Description | | | | Remark |
|---|---|---|---|---|---|---|
| JR031 | 1-216-295-00 | METAL CHIP | 0 | 5% | 1/10W | |
| JR032 | 1-216-295-00 | METAL CHIP | 0 | 5% | 1/10W | |
| JR033 | 1-216-295-00 | METAL CHIP | 0 | 5% | 1/10W | |
| JR034 | 1-216-295-00 | METAL CHIP | 0 | 5% | 1/10W | |
| JR035 | 1-216-295-00 | METAL CHIP | 0 | 5% | 1/10W | |
| JR036 | 1-216-295-00 | METAL CHIP | 0 | 5% | 1/10W | |
| JR037 | 1-216-295-00 | METAL CHIP | 0 | 5% | 1/10W | |
| JR038 | 1-216-295-00 | METAL CHIP | 0 | 5% | 1/10W | |
| JR039 | 1-216-295-00 | METAL CHIP | 0 | 5% | 1/10W | |
| JR040 | 1-216-295-00 | METAL CHIP | 0 | 5% | 1/10W | |
| JR041 | 1-216-295-00 | METAL CHIP | 0 | 5% | 1/10W | |
| JR042 | 1-216-295-00 | METAL CHIP | 0 | 5% | 1/10W | |
| JR043 | 1-216-295-00 | METAL CHIP | 0 | 5% | 1/10W | |
| JR044 | 1-216-295-00 | METAL CHIP | 0 | 5% | 1/10W | |
| JR045 | 1-216-295-00 | METAL CHIP | 0 | 5% | 1/10W | |
| JR046 | 1-216-295-00 | METAL CHIP | 0 | 5% | 1/10W | |
| JR047 | 1-216-295-00 | METAL CHIP | 0 | 5% | 1/10W | |
| JR048 | 1-216-295-00 | METAL CHIP | 0 | 5% | 1/10W | |
| JR049 | 1-216-295-00 | METAL CHIP | 0 | 5% | 1/10W | |
| JR050 | 1-216-295-00 | METAL CHIP | 0 | 5% | 1/10W | |
| JR051 | 1-216-295-00 | METAL CHIP | 0 | 5% | 1/10W | |
| JR052 | 1-216-295-00 | METAL CHIP | 0 | 5% | 1/10W | |
| JR053 | 1-216-295-00 | METAL CHIP | 0 | 5% | 1/10W | |
| JR054 | 1-216-295-00 | METAL CHIP | 0 | 5% | 1/10W | |
| JR055 | 1-216-295-00 | METAL CHIP | 0 | 5% | 1/10W | |
| JR056 | 1-216-295-00 | METAL CHIP | 0 | 5% | 1/10W | |
| JR057 | 1-216-295-00 | METAL CHIP | 0 | 5% | 1/10W | |
| JR058 | 1-216-295-00 | METAL CHIP | 0 | 5% | 1/10W | |
| JR059 | 1-216-295-00 | METAL CHIP | 0 | 5% | 1/10W | |
| JR060 | 1-216-295-00 | METAL CHIP | 0 | 5% | 1/10W | |
| JR061 | 1-216-295-00 | METAL CHIP | 0 | 5% | 1/10W | |
| JR062 | 1-216-295-00 | METAL CHIP | 0 | 5% | 1/10W | |
| JR063 | 1-216-295-00 | METAL CHIP | 0 | 5% | 1/10W | |
| JR064 | 1-216-295-00 | METAL CHIP | 0 | 5% | 1/10W | |
| JR065 | 1-216-295-00 | METAL CHIP | 0 | 5% | 1/10W | |
| JR066 | 1-216-295-00 | METAL CHIP | 0 | 5% | 1/10W | |
| JR067 | 1-216-295-00 | METAL CHIP | 0 | 5% | 1/10W | |
| JR068 | 1-216-295-00 | METAL CHIP | 0 | 5% | 1/10W | |
| JR069 | 1-216-295-00 | METAL CHIP | 0 | 5% | 1/10W | |
| JR070 | 1-216-295-00 | METAL CHIP | 0 | 5% | 1/10W | |
| JR071 | 1-216-295-00 | METAL CHIP | 0 | 5% | 1/10W | |
| JR072 | 1-216-295-00 | METAL CHIP | 0 | 5% | 1/10W | |
| JR073 | 1-216-295-00 | METAL CHIP | 0 | 5% | 1/10W | |
| JR074 | 1-216-295-00 | METAL CHIP | 0 | 5% | 1/10W | |
| JR075 | 1-216-295-00 | METAL CHIP | 0 | 5% | 1/10W | |
| JR076 | 1-216-295-00 | METAL CHIP | 0 | 5% | 1/10W | |
| JR077 | 1-216-295-00 | METAL CHIP | 0 | 5% | 1/10W | |
| JR078 | 1-216-295-00 | METAL CHIP | 0 | 5% | 1/10W | |
| JR079 | 1-216-295-00 | METAL CHIP | 0 | 5% | 1/10W | |
| JR080 | 1-216-295-00 | METAL CHIP | 0 | 5% | 1/10W | |
| JR081 | 1-216-295-00 | METAL CHIP | 0 | 5% | 1/10W | |
| JR082 | 1-216-295-00 | METAL CHIP | 0 | 5% | 1/10W | |
| JR083 | 1-216-295-00 | METAL CHIP | 0 | 5% | 1/10W | |
| JR084 | 1-216-295-00 | METAL CHIP | 0 | 5% | 1/10W | |
| JR085 | 1-216-295-00 | METAL CHIP | 0 | 5% | 1/10W | |
| JR086 | 1-216-295-00 | METAL CHIP | 0 | 5% | 1/10W | |
| JR087 | 1-216-295-00 | METAL CHIP | 0 | 5% | 1/10W | |
| JR088 | 1-216-295-00 | METAL CHIP | 0 | 5% | 1/10W | |
| JR089 | 1-216-295-00 | METAL CHIP | 0 | 5% | 1/10W | |
| JR090 | 1-216-295-00 | METAL CHIP | 0 | 5% | 1/10W | |
| JR091 | 1-216-295-00 | METAL CHIP | 0 | 5% | 1/10W | |
| JR092 | 1-216-295-00 | METAL CHIP | 0 | 5% | 1/10W | |
| JR093 | 1-216-295-00 | METAL CHIP | 0 | 5% | 1/10W | |
| JR094 | 1-216-295-00 | METAL CHIP | 0 | 5% | 1/10W | |
| JR095 | 1-216-295-00 | METAL CHIP | 0 | 5% | 1/10W | |
| JR096 | 1-216-295-00 | METAL CHIP | 0 | 5% | 1/10W | |
| JR097 | 1-216-295-00 | METAL CHIP | 0 | 5% | 1/10W | |
| JR098 | 1-216-295-00 | METAL CHIP | 0 | 5% | 1/10W | |
| JR099 | 1-216-295-00 | METAL CHIP | 0 | 5% | 1/10W | |
| JR100 | 1-216-296-00 | METAL CHIP | 0 | 5% | 1/8W | |
| JR101 | 1-216-296-00 | METAL CHIP | 0 | 5% | 1/8W | |
| JR102 | 1-216-296-00 | METAL CHIP | 0 | 5% | 1/8W | |
| JR103 | 1-216-296-00 | METAL CHIP | 0 | 5% | 1/8W | |
| JR104 | 1-216-296-00 | METAL CHIP | 0 | 5% | 1/8W | |
| JR105 | 1-216-296-00 | METAL CHIP | 0 | 5% | 1/8W | |
| JR106 | 1-216-296-00 | METAL CHIP | 0 | 5% | 1/8W | |
| JR107 | 1-216-296-00 | METAL CHIP | 0 | 5% | 1/8W | |
| JR108 | 1-216-296-00 | METAL CHIP | 0 | 5% | 1/8W | |
| JR109 | 1-216-296-00 | METAL CHIP | 0 | 5% | 1/8W | |
| JR110 | 1-216-296-00 | METAL CHIP | 0 | 5% | 1/8W | |
| JR111 | 1-216-296-00 | METAL CHIP | 0 | 5% | 1/8W | |
| JR112 | 1-216-296-00 | METAL CHIP | 0 | 5% | 1/8W | |
| JR113 | 1-216-296-00 | METAL CHIP | 0 | 5% | 1/8W | |
| JR114 | 1-216-296-00 | METAL CHIP | 0 | 5% | 1/8W | |
| JR115 | 1-216-296-00 | METAL CHIP | 0 | 5% | 1/8W | |
| JR116 | 1-216-296-00 | METAL CHIP | 0 | 5% | 1/8W | |
| JR117 | 1-216-296-00 | METAL CHIP | 0 | 5% | 1/8W | |
| JR118 | 1-216-296-00 | METAL CHIP | 0 | 5% | 1/8W | |
| JR119 | 1-216-296-00 | METAL CHIP | 0 | 5% | 1/8W | |
| JR120 | 1-216-296-00 | METAL CHIP | 0 | 5% | 1/8W | |
| JR121 | 1-216-296-00 | METAL CHIP | 0 | 5% | 1/8W | |
| JR122 | 1-216-296-00 | METAL CHIP | 0 | 5% | 1/8W | |
| JR123 | 1-216-296-00 | METAL CHIP | 0 | 5% | 1/8W | |
| JR124 | 1-216-296-00 | METAL CHIP | 0 | 5% | 1/8W | |
| JR125 | 1-216-296-00 | METAL CHIP | 0 | 5% | 1/8W | |
| JR126 | 1-216-296-00 | METAL CHIP | 0 | 5% | 1/8W | |
| JR127 | 1-216-296-00 | METAL CHIP | 0 | 5% | 1/8W | |
| JR128 | 1-216-296-00 | METAL CHIP | 0 | 5% | 1/8W | |
| JR129 | 1-216-296-00 | METAL CHIP | 0 | 5% | 1/8W | |
| JR130 | 1-216-296-00 | METAL CHIP | 0 | 5% | 1/8W | |
| JR131 | 1-216-296-00 | METAL CHIP | 0 | 5% | 1/8W | |
| JR132 | 1-216-296-00 | METAL CHIP | 0 | 5% | 1/8W | |
| JR133 | 1-216-296-00 | METAL CHIP | 0 | 5% | 1/8W | |
| JR134 | 1-216-296-00 | METAL CHIP | 0 | 5% | 1/8W | |
| JR135 | 1-216-296-00 | METAL CHIP | 0 | 5% | 1/8W | |
| JR136 | 1-216-296-00 | METAL CHIP | 0 | 5% | 1/8W | |

When indicating parts by reference number, please include the board name.

| Ref.No | Part No. | Description | | | | Remark |
|---|---|---|---|---|---|---|
| JR137 | 1-216-296-00 | METAL CHIP | 0 | 5% | 1/8W | |
| JR138 | 1-216-296-00 | METAL CHIP | 0 | 5% | 1/8W | |
| JR139 | 1-216-296-00 | METAL CHIP | 0 | 5% | 1/8W | |
| JR140 | 1-216-296-00 | METAL CHIP | 0 | 5% | 1/8W | |
| JR141 | 1-216-296-00 | METAL CHIP | 0 | 5% | 1/8W | |
| JR142 | 1-216-296-00 | METAL CHIP | 0 | 5% | 1/8W | |
| JR143 | 1-216-296-00 | METAL CHIP | 0 | 5% | 1/8W | |
| JR144 | 1-216-296-00 | METAL CHIP | 0 | 5% | 1/8W | |
| JR145 | 1-216-296-00 | METAL CHIP | 0 | 5% | 1/8W | |
| JR146 | 1-216-296-00 | METAL CHIP | 0 | 5% | 1/8W | |
| JR147 | 1-216-296-00 | METAL CHIP | 0 | 5% | 1/8W | |
| JR148 | 1-216-296-00 | METAL CHIP | 0 | 5% | 1/8W | |
| JR149 | 1-216-296-00 | METAL CHIP | 0 | 5% | 1/8W | |
| JR150 | 1-216-296-00 | METAL CHIP | 0 | 5% | 1/8W | |
| JR151 | 1-216-296-00 | METAL CHIP | 0 | 5% | 1/8W | |
| JR152 | 1-216-296-00 | METAL CHIP | 0 | 5% | 1/8W | |
| JR153 | 1-216-296-00 | METAL CHIP | 0 | 5% | 1/8W | |
| JR154 | 1-216-296-00 | METAL CHIP | 0 | 5% | 1/8W | |
| JR155 | 1-216-296-00 | METAL CHIP | 0 | 5% | 1/8W | |
| JR156 | 1-216-296-00 | METAL CHIP | 0 | 5% | 1/8W | |
| JR157 | 1-216-296-00 | METAL CHIP | 0 | 5% | 1/8W | |
| JR158 | 1-216-296-00 | METAL CHIP | 0 | 5% | 1/8W | |
| JR159 | 1-216-296-00 | METAL CHIP | 0 | 5% | 1/8W | |
| JR160 | 1-216-296-00 | METAL CHIP | 0 | 5% | 1/8W | |
| JR161 | 1-216-296-00 | METAL CHIP | 0 | 5% | 1/8W | |
| JR162 | 1-216-296-00 | METAL CHIP | 0 | 5% | 1/8W | |
| JR163 | 1-216-296-00 | METAL CHIP | 0 | 5% | 1/8W | |
| JR164 | 1-216-296-00 | METAL CHIP | 0 | 5% | 1/8W | |
| JR165 | 1-216-296-00 | METAL CHIP | 0 | 5% | 1/8W | |
| JR166 | 1-216-296-00 | METAL CHIP | 0 | 5% | 1/8W | |
| JR167 | 1-216-296-00 | METAL CHIP | 0 | 5% | 1/8W | |
| JR168 | 1-216-296-00 | METAL CHIP | 0 | 5% | 1/8W | |
| JR169 | 1-216-296-00 | METAL CHIP | 0 | 5% | 1/8W | |
| JR170 | 1-216-296-00 | METAL CHIP | 0 | 5% | 1/8W | |
| JR171 | 1-216-296-00 | METAL CHIP | 0 | 5% | 1/8W | |
| JR172 | 1-216-296-00 | METAL CHIP | 0 | 5% | 1/8W | |
| JR173 | 1-216-296-00 | METAL CHIP | 0 | 5% | 1/8W | |
| JR174 | 1-216-296-00 | METAL CHIP | 0 | 5% | 1/8W | |
| | | COIL | | | | |
| L002 | 1-408-416-00 | MICRO INDUCTOR 39UH | | | | |
| L003 | 1-408-421-00 | MICRO INDUCTOR 100UH | | | | |
| L004 | 1-408-427-00 | MICRO INDUCTOR 330UH | | | | |
| L005 | 1-408-422-00 | MICRO INDUCTOR 120UH | | | | |
| L009 | 1-408-418-00 | MICRO INDUCTOR 56UH | | | | |
| L010 | 1-408-420-00 | MICRO INDUCTOR 82UH | | | | |
| L011 | 1-408-418-00 | MICRO INDUCTOR 56UH | | | | |
| L012 | 1-408-423-00 | MICRO INDUCTOR 150UH | | | | |
| L013 | 1-408-421-00 | MICRO INDUCTOR 100UH | | | | |
| L100 | 1-408-409-00 | MICRO INDUCTOR 10UH | | | | |
| L101 | 1-408-428-00 | MICRO INDUCTOR 390UH | | | | |
| L102 | 1-408-409-00 | MICRO INDUCTOR 10UH | | | | |
| L103 | 1-408-423-00 | MICRO INDUCTOR 150UH | | | | |
| L105 | 1-408-408-00 | MICRO INDUCTOR 8.2UH | | | | |

| Ref.No | Part No. | Description | Remark |
|---|---|---|---|
| L106 | 1-408-414-00 | MICRO INDUCTOR 27UH | |
| L107 | 1-408-422-00 | MICRO INDUCTOR 120UH | |
| L201 | 1-408-397-00 | MICRO INDUCTOR 1UH | |
| L202 | 1-408-397-00 | MICRO INDUCTOR 1UH | |
| L204 | 1-408-419-00 | MICRO INDUCTOR 68UH | |
| L205 | 1-408-419-00 | MICRO INDUCTOR 68UH | |
| L206 | 1-408-417-00 | MICRO INDUCTOR 47UH | |
| L207 | 1-408-420-00 | MICRO INDUCTOR 82UH | |
| L208 | 1-408-417-00 | MICRO INDUCTOR 47UH | |
| L209 | 1-408-413-00 | MICRO INDUCTOR 22UH | |
| L212 | 1-408-413-00 | MICRO INDUCTOR 22UH | |
| L213 | 1-408-408-00 | MICRO INDUCTOR 8.2UH | |
| L220 | 1-408-411-00 | MICRO INDUCTOR 15UH | |
| L221 | 1-408-427-00 | MICRO INDUCTOR 330UH | |
| L301 | 1-408-421-00 | MICRO INDUCTOR 100UH | |
| L302 | 1-408-413-00 | MICRO INDUCTOR 22UH | |
| L303 | 1-408-425-00 | MICRO INDUCTOR 220UH | |
| L304 | 1-408-422-00 | MICRO INDUCTOR 120UH | |
| L401 | 1-410-118-11 | MICRO INDUCTOR 0.82MMH | |
| L402 | 1-408-424-00 | MICRO INDUCTOR 180UH | |
| L405 | 1-408-409-00 | MICRO INDUCTOR 10UH | |
| L411 | 1-408-413-00 | MICRO INDUCTOR 22UH (WG MODEL) | |
| L412 | 1-408-421-00 | MICRO INDUCTOR 100UH | |
| | | VARIABIE COIL | |
| LV201 | 1-408-512-00 | COIL (VARIABLE) 10UH | |
| | | IC LINK | |
| PS001⚠ | 1-532-679-00 | LINK, IC (ICP-N15) | |
| | | TRANSISTOR | |
| Q002 | 8-729-901-06 | TRANSISTOR DTA144EK | |
| Q004 | 8-729-901-06 | TRANSISTOR DTC144EK | |
| Q006 | 8-729-100-67 | TRANSISTOR 2SC1623-L7 | |
| Q009 | 8-729-100-67 | TRANSISTOR 2SC1623-L7 | |
| Q010 | 8-729-312-22 | TRANSISTOR 2SA1122 | |
| Q011 | 8-729-312-22 | TRANSISTOR 2SA1122 | |
| Q013 | 8-729-901-00 | TRANSISTOR DTC124EK | |
| Q014 | 8-729-117-54 | TRANSISTOR 2SA1175 | |
| Q015 | 8-729-901-06 | TRANSISTOR DTC144EK | |
| Q018 | 8-729-312-22 | TRANSISTOR 2SA1122 | |
| Q019 | 8-729-100-76 | TRANSISTOR 2SA812 | |
| Q020 | 8-729-100-67 | TRANSISTOR 2SC1623-L7 | |
| Q023 | 8-729-100-67 | TRANSISTOR 2SC1623-L7 | |
| Q024 | 8-729-100-76 | TRANSISTOR 2SA812 | |
| Q025 | 8-729-901-06 | TRANSISTOR DTC144EK | |
| Q026 | 8-729-901-06 | TRANSISTOR DTA144EK | |
| Q027 | 8-729-100-67 | TRANSISTOR 2SC1623-L7 | |
| Q100 | 8-729-100-67 | TRANSISTOR 2SC1623-L7 | |
| Q101 | 8-729-901-06 | TRANSISTOR DTC144EK | |
| Q102 | 8-729-901-06 | TRANSISTOR DTC144EK | |
| Q103 | 8-729-100-67 | TRANSISTOR 2SC1623-L7 | |

The components identified by shading and mark ⚠ are critical for safety. Replace only with part number specified.

When indicating parts by reference number, please include the board name.

| Ref.No | Part No. | Description | Remark |
|---|---|---|---|
| Q104 | 8-729-100-67 | TRANSISTOR 2SC1623-L7 | |
| Q106 | 8-729-901-06 | TRANSISTOR DTA144EK | |
| Q107 | 8-729-100-67 | TRANSISTOR 2SC1623-L7 | |
| Q110 | 8-729-312-22 | TRANSISTOR 2SA1122C | |
| Q113 | 8-729-100-67 | TRANSISTOR 2SC1623-L7 | |
| Q201 | 8-729-901-06 | TRANSISTOR DTC144EK | |
| Q202 | 8-729-901-00 | TRANSISTOR DTC124EK | |
| Q203 | 8-729-901-00 | TRANSISTOR DTC124EK | |
| Q204 | 8-729-901-06 | TRANSISTOR DTC144EK | |
| Q205 | 8-729-901-06 | TRANSISTOR DTC144EK | |
| Q206 | 8-729-901-06 | TRANSISTOR DTC144EK | |
| Q207 | 8-729-100-67 | TRANSISTOR 2SC1623-L7 | |
| Q208 | 8-729-100-67 | TRANSISTOR 2SC1623-L7 | |
| Q209 | 8-729-100-67 | TRANSISTOR 2SC1623-L7 | |
| Q211 | 8-729-901-06 | TRANSISTOR DTC144EK | |
| Q215 | 8-729-312-22 | TRANSISTOR 2SA1122 | |
| Q216 | 8-729-100-67 | TRANSISTOR 2SC1623-L7 | |
| Q217 | 8-729-100-67 | TRANSISTOR 2SC1623-L7 | |
| Q218 | 8-729-312-22 | TRANSISTOR 2SA1122 | |
| Q219 | 8-729-901-04 | TRANSISTOR DTA114EK | |
| Q220 | 8-729-100-67 | TRANSISTOR 2SC1623-L7 | |
| Q221 | 8-729-312-22 | TRANSISTOR 2SA1122 | |
| Q222 | 8-729-100-67 | TRANSISTOR 2SC1623-L7 | |
| Q301 | 8-729-100-67 | TRANSISTOR 2SC1623-L7 | |
| Q302 | 8-729-100-67 | TRANSISTOR 2SC1623-L7 | |
| Q304 | 8-729-901-00 | TRANSISTOR DTC124EK | |
| Q403 | 8-729-901-06 | TRANSISTOR DTA144EK (WG MODEL) | |
| Q404 | 8-729-901-06 | TRANSISTOR DTA144EK | |
| Q405 | 8-729-901-06 | TRANSISTOR DTC144EK | |
| Q406 | 8-729-100-67 | TRANSISTOR 2SC1623-L7 | |
| Q407 | 8-729-100-67 | TRANSISTOR 2SC1623-L7 (WG MODEL) | |
| Q408 | 8-729-177-33 | TRANSISTOR 2SD773-4 | |
| Q409 | 8-729-901-06 | TRANSISTOR DTC144EK | |
| Q410 | 8-729-901-06 | TRANSISTOR DTA144EK | |
| Q413 | 8-729-100-67 | TRANSISTOR 2SC1623-L7 | |
| Q420 | 8-729-312-22 | TRANSISTOR 2SA1122 | |
| Q421 | 8-729-178-54 | TRANSISTOR 2SC2785 | |
| Q423 | 8-729-177-33 | TRANSISTOR 2SD773-4 | |

## RESISTOR

| Ref.No | Part No. | Description | | | | Remark |
|---|---|---|---|---|---|---|
| R008 | 1-216-041-00 | METAL CHIP | 470 | 5% | 1/10W | |
| R009 | 1-216-037-00 | METAL CHIP | 330 | 5% | 1/10W | |
| R010 | 1-216-041-00 | METAL CHIP | 470 | 5% | 1/10W | |
| R012 | 1-216-051-00 | METAL CHIP | 1.2K | 5% | 1/10W | |
| R013 | 1-216-075-00 | METAL CHIP | 12K | 5% | 1/10W | |
| R014 | 1-216-081-00 | METAL CHIP | 22K | 5% | 1/10W | |
| R016 | 1-216-057-00 | METAL CHIP | 2.2K | 5% | 1/10W | |
| R017 | 1-216-055-00 | METAL CHIP | 1.8K | 5% | 1/10W | |
| R018 | 1-216-059-00 | METAL CHIP | 2.7K | 5% | 1/10W | |
| R019 | 1-216-057-00 | METAL CHIP | 2.2K | 5% | 1/10W | |
| R020 | 1-216-039-00 | METAL CHIP | 390 | 5% | 1/10W | |
| R021 | 1-216-043-00 | METAL CHIP | 560 | 5% | 1/10W | |
| R022 | 1-216-073-00 | METAL CHIP | 10K | 5% | 1/10W | |
| R023 | 1-216-043-00 | METAL CHIP | 560 | 5% | 1/10W | |
| R024 | 1-216-049-00 | METAL CHIP | 1K | 5% | 1/10W | |
| R025 | 1-216-057-00 | METAL CHIP | 2.2K | 5% | 1/10W | |
| R026 | 1-216-059-00 | METAL CHIP | 2.7K | 5% | 1/10W | |
| R027 | 1-216-057-00 | METAL CHIP | 2.2K | 5% | 1/10W | |
| R028 | 1-216-049-00 | METAL CHIP | 1K | 5% | 1/10W | |
| R029 | 1-216-073-00 | METAL CHIP | 10K | 5% | 1/10W | |
| R030 | 1-216-049-00 | METAL CHIP | 1K | 5% | 1/10W | |
| R044 | 1-216-065-00 | METAL CHIP | 4.7K | 5% | 1/10W | |
| R045 | 1-216-065-00 | METAL CHIP | 4.7K | 5% | 1/10W | |
| R046 | 1-216-039-00 | METAL CHIP | 390 | 5% | 1/10W | |
| R047 | 1-216-101-00 | METAL CHIP | 150K | 5% | 1/10W | |
| R048 | 1-216-099-00 | METAL CHIP | 120K | 5% | 1/10W | |
| R049 | 1-216-113-00 | METAL CHIP | 470K | 5% | 1/10W | |
| R050 | 1-216-075-00 | METAL CHIP | 12K | 5% | 1/10W | |
| R051 | 1-216-081-00 | METAL CHIP | 22K | 5% | 1/10W | |
| R052 | 1-216-077-00 | METAL CHIP | 15K | 5% | 1/10W | |
| R053 | 1-216-063-00 | METAL CHIP | 3.9K | 5% | 1/10W | |
| R054 | 1-216-033-00 | METAL CHIP | 220 | 5% | 1/10W | |
| R055 | 1-216-109-00 | METAL CHIP | 330K | 5% | 1/10W | |
| R056 | 1-216-049-00 | METAL CHIP | 1K | 5% | 1/10W | |
| R057 | 1-216-081-00 | METAL CHIP | 22K | 5% | 1/10W | |
| R058 | 1-216-081-00 | METAL CHIP | 22K | 5% | 1/10W | |
| R059 | 1-216-089-00 | METAL CHIP | 47K | 5% | 1/10W | |
| R060 | 1-216-091-00 | METAL CHIP | 56K | 5% | 1/10W | |
| R061 | 1-216-059-00 | METAL CHIP | 2.7K | 5% | 1/10W | |
| R062 | 1-216-083-00 | METAL CHIP | 27K | 5% | 1/10W | |
| R063 | 1-216-093-00 | METAL CHIP | 68K | 5% | 1/10W | |
| R064 | 1-249-417-11 | CARBON | 1K | 5% | 1/6W | |
| R066 | 1-216-043-00 | METAL CHIP | 560 | 5% | 1/10W | |
| R067 | 1-216-037-00 | METAL CHIP | 330 | 5% | 1/10W | |
| R068 | 1-216-045-00 | METAL CHIP | 680 | 5% | 1/10W | |
| R069 | 1-216-035-00 | METAL CHIP | 270 | 5% | 1/10W | |
| R070 | 1-216-047-00 | METAL CHIP | 820 | 5% | 1/10W | |
| R071 | 1-216-081-00 | METAL CHIP | 22K | 5% | 1/10W | |
| R072 | 1-216-081-00 | METAL CHIP | 22K | 5% | 1/10W | |
| R073 | 1-216-065-00 | METAL CHIP | 4.7K | 5% | 1/10W | |
| R074 | 1-216-065-00 | METAL CHIP | 4.7K | 5% | 1/10W | |
| R075 | 1-216-047-00 | METAL CHIP | 820 | 5% | 1/10W | |
| R076 | 1-216-089-00 | METAL CHIP | 47K | 5% | 1/10W | |
| R078 | 1-216-081-00 | METAL CHIP | 22K | 5% | 1/10W | |
| R079 | 1-216-041-00 | METAL CHIP | 470 | 5% | 1/10W | |
| R080 | 1-216-051-00 | METAL CHIP | 1.2K | 5% | 1/10W | |
| R081 | 1-216-081-00 | METAL CHIP | 22K | 5% | 1/10W | |
| R082 | 1-216-081-00 | METAL CHIP | 22K | 5% | 1/10W | |
| R083 | 1-216-081-00 | METAL CHIP | 22K | 5% | 1/10W | |
| R084 | 1-216-081-00 | METAL CHIP | 22K | 5% | 1/10W | |
| R087 | 1-216-025-00 | METAL CHIP | 100 | 5% | 1/10W | |
| R100 | 1-216-049-00 | METAL CHIP | 1K | 5% | 1/10W | |
| R101 | 1-216-049-00 | METAL CHIP | 1K | 5% | 1/10W | |
| R102 | 1-216-039-00 | METAL CHIP | 390 | 5% | 1/10W | |
| R103 | 1-216-057-00 | METAL CHIP | 2.2K | 5% | 1/10W | |
| R109 | 1-216-091-00 | METAL CHIP | 56K | 5% | 1/10W | |

When indicating parts by reference number, please include the board name.

| Ref.No | Part No. | Description | | | | Remark |
|---|---|---|---|---|---|---|
| R110 | 1-216-065-00 | METAL CHIP | 4.7K | 5% | 1/10W | |
| R111 | 1-216-059-00 | METAL CHIP | 2.7K | 5% | 1/10W | |
| R112 | 1-216-055-00 | METAL CHIP | 1.8K | 5% | 1/10W | |
| R113 | 1-216-031-00 | METAL CHIP | 180 | 5% | 1/10W | |
| R114 | 1-216-041-00 | METAL CHIP | 470 | 5% | 1/10W | |
| R115 | 1-216-053-00 | METAL CHIP | 1.5K | 5% | 1/10W | |
| R116 | 1-216-041-00 | METAL CHIP | 470 | 5% | 1/10W | |
| R117 | 1-216-049-00 | METAL CHIP | 1K | 5% | 1/10W | |
| R118 | 1-216-049-00 | METAL CHIP | 1K | 5% | 1/10W | |
| R119 | 1-216-019-00 | METAL CHIP | 56 | 5% | 1/10W | |
| R120 | 1-216-081-00 | METAL CHIP | 22K | 5% | 1/10W | |
| R121 | 1-216-081-00 | METAL CHIP | 22K | 5% | 1/10W | |
| R128 | 1-216-295-00 | METAL CHIP | 0 | 5% | 1/10W | |
| R129 | 1-216-049-00 | METAL CHIP | 1K | 5% | 1/10W | |
| R131 | 1-216-057-00 | METAL CHIP | 2.2K | 5% | 1/10W | |
| R132 | 1-216-057-00 | METAL CHIP | 2.2K | 5% | 1/10W | |
| R133 | 1-216-033-00 | METAL CHIP | 220 | 5% | 1/10W | |
| R134 | 1-216-033-00 | METAL CHIP | 220 | 5% | 1/10W | |
| R136 | 1-216-041-00 | METAL CHIP | 470 | 5% | 1/10W | |
| R137 | 1-216-041-00 | METAL CHIP | 470 | 5% | 1/10W | |
| R138 | 1-216-041-00 | METAL CHIP | 470 | 5% | 1/10W | |
| R139 | 1-216-051-00 | METAL CHIP | 1.2K | 5% | 1/10W | |
| R140 | 1-216-041-00 | METAL CHIP | 470 | 5% | 1/10W | |
| R141 | 1-216-081-00 | METAL CHIP | 22K | 5% | 1/10W | |
| R142 | 1-216-081-00 | METAL CHIP | 22K | 5% | 1/10W | |
| R144 | 1-216-023-00 | METAL CHIP | 82 | 5% | 1/10W | |
| R145 | 1-216-029-00 | METAL CHIP | 150 | 5% | 1/10W | |
| R146 | 1-216-296-00 | METAL CHIP | 0 | 5% | 1/8W | |
| R148 | 1-216-047-00 | METAL CHIP | 820 | 5% | 1/10W | |
| R149 | 1-216-049-00 | METAL CHIP | 1K | 5% | 1/10W | |
| R175 | 1-216-295-00 | METAL CHIP | 0 | 5% | 1/10W | |
| R201 | 1-216-009-00 | METAL CHIP | 22 | 5% | 1/10W | |
| R202 | 1-216-025-00 | METAL CHIP | 100 | 5% | 1/10W | |
| R203 | 1-216-027-00 | METAL CHIP | 120 | 5% | 1/10W | |
| R204 | 1-216-081-00 | METAL CHIP | 22K | 5% | 1/10W | |
| R205 | 1-216-081-00 | METAL CHIP | 22K | 5% | 1/10W | |
| R206 | 1-216-081-00 | METAL CHIP | 22K | 5% | 1/10W | |
| R207 | 1-216-081-00 | METAL CHIP | 22K | 5% | 1/10W | |
| R208 | 1-216-075-00 | METAL CHIP | 12K | 5% | 1/10W | |
| R209 | 1-216-121-00 | METAL CHIP | 1M | 5% | 1/10W | |
| R210 | 1-216-117-00 | METAL CHIP | 680K | 5% | 1/10W | |
| R211 | 1-216-087-00 | METAL CHIP | 39K | 5% | 1/10W | |
| R212 | 1-216-073-00 | METAL CHIP | 10K | 5% | 1/10W | |
| R213 | 1-216-025-00 | METAL CHIP | 100 | 5% | 1/10W | |
| R214 | 1-216-039-00 | METAL CHIP | 390 | 5% | 1/10W | |
| R215 | 1-216-057-00 | METAL CHIP | 2.2K | 5% | 1/10W | |
| R216 | 1-216-085-00 | METAL CHIP | 33K | 5% | 1/10W | |
| R217 | 1-216-081-00 | METAL CHIP | 22K | 5% | 1/10W | |
| R218 | 1-216-049-00 | METAL CHIP | 1K | 5% | 1/10W | |
| R219 | 1-216-051-00 | METAL CHIP | 1.2K | 5% | 1/10W | |
| R220 | 1-216-065-00 | METAL CHIP | 4.7K | 5% | 1/10W | |
| R221 | 1-216-045-00 | METAL CHIP | 680 | 5% | 1/10W | |
| R222 | 1-216-065-00 | METAL CHIP | 4.7K | 5% | 1/10W | |

| Ref.No | Part No. | Description | | | | Remark |
|---|---|---|---|---|---|---|
| R224 | 1-216-081-00 | METAL CHIP | 22K | 5% | 1/10W | |
| R225 | 1-216-065-00 | METAL CHIP | 4.7K | 5% | 1/10W | |
| R226 | 1-216-057-00 | METAL CHIP | 2.2K | 5% | 1/10W | |
| R227 | 1-216-045-00 | METAL CHIP | 680 | 5% | 1/10W | |
| R228 | 1-216-049-00 | METAL CHIP | 1K | 5% | 1/10W | |
| R229 | 1-216-045-00 | METAL CHIP | 680 | 5% | 1/10W | |
| R230 | 1-216-051-00 | METAL CHIP | 1.2K | 5% | 1/10W | |
| R231 | 1-216-045-00 | METAL CHIP | 680 | 5% | 1/10W | |
| R232 | 1-216-053-00 | METAL CHIP | 1.5K | 5% | 1/10W | |
| R233 | 1-216-045-00 | METAL CHIP | 680 | 5% | 1/10W | |
| R234 | 1-216-049-00 | METAL CHIP | 1K | 5% | 1/10W | |
| R236 | 1-216-049-00 | METAL CHIP | 1K | 5% | 1/10W | |
| R237 | 1-216-041-00 | METAL CHIP | 470 | 5% | 1/10W | |
| R238 | 1-216-049-00 | METAL CHIP | 1K | 5% | 1/10W | |
| R239 | 1-216-041-00 | METAL CHIP | 470 | 5% | 1/10W | |
| R241 | 1-216-035-00 | METAL CHIP | 270 | 5% | 1/10W | |
| R246 | 1-216-079-00 | METAL CHIP | 18K | 5% | 1/10W | |
| R247 | 1-216-075-00 | METAL CHIP | 12K | 5% | 1/10W | |
| R248 | 1-216-051-00 | METAL CHIP | 1.2K | 5% | 1/10W | |
| R249 | 1-216-081-00 | METAL CHIP | 22K | 5% | 1/10W | |
| R250 | 1-216-081-00 | METAL CHIP | 22K | 5% | 1/10W | |
| R251 | 1-216-039-00 | METAL CHIP | 390 | 5% | 1/10W | |
| R252 | 1-216-027-00 | METAL CHIP | 120 | 5% | 1/10W | |
| R253 | 1-216-035-00 | METAL CHIP | 270 | 5% | 1/10W | |
| R254 | 1-216-049-00 | METAL CHIP | 1K | 5% | 1/10W | |
| R255 | 1-216-083-00 | METAL CHIP | 27K | 5% | 1/10W | |
| R256 | 1-216-089-00 | METAL CHIP | 47K | 5% | 1/10W | |
| R257 | 1-216-077-00 | METAL CHIP | 15K | 5% | 1/10W | |
| R258 | 1-216-073-00 | METAL CHIP | 10K | 5% | 1/10W | |
| R265 | 1-216-081-00 | METAL CHIP | 22K | 5% | 1/10W | |
| R266 | 1-216-081-00 | METAL CHIP | 22K | 5% | 1/10W | |
| R267 | 1-216-047-00 | METAL CHIP | 820 | 5% | 1/10W | |
| R268 | 1-216-057-00 | METAL CHIP | 2.2K | 5% | 1/10W | |
| R269 | 1-216-045-00 | METAL CHIP | 680 | 5% | 1/10W | |
| R270 | 1-216-031-00 | METAL CHIP | 180 | 5% | 1/10W | |
| R271 | 1-216-049-00 | METAL CHIP | 1K | 5% | 1/10W | |
| R272 | 1-216-079-00 | METAL CHIP | 18K | 5% | 1/10W | |
| R273 | 1-216-075-00 | METAL CHIP | 12K | 5% | 1/10W | |
| R274 | 1-216-035-00 | METAL CHIP | 270 | 5% | 1/10W | |
| R275 | 1-216-017-00 | METAL CHIP | 47 | 5% | 1/10W | |
| R276 | 1-216-063-00 | METAL CHIP | 3.9K | 5% | 1/10W | |
| R277 | 1-216-057-00 | METAL CHIP | 2.2K | 5% | 1/10W | |
| R278 | 1-216-059-00 | METAL CHIP | 2.7K | 5% | 1/10W | |
| R279 | 1-216-065-00 | METAL CHIP | 4.7K | 5% | 1/10W | |
| R280 | 1-216-065-00 | METAL CHIP | 4.7K | 5% | 1/10W | |
| R281 | 1-216-044-00 | METAL CHIP | 620 | 5% | 1/10W | |
| R282 | 1-216-033-00 | METAL CHIP | 220 | 5% | 1/10W | |
| R285 | 1-216-081-00 | METAL CHIP | 22K | 5% | 1/10W | |
| R286 | 1-216-073-00 | METAL CHIP | 10K | 5% | 1/10W | |
| R287 | 1-216-035-00 | METAL CHIP | 270 | 5% | 1/10W | |
| R288 | 1-216-053-00 | METAL CHIP | 1.5K | 5% | 1/10W | |
| R289 | 1-216-025-00 | METAL CHIP | 100 | 5% | 1/10W | |
| R290 | 1-216-083-00 | METAL CHIP | 27K | 5% | 1/10W | |

When indicating parts by reference number, please include the board name.

| Ref.No | Part No. | Description | | | | Remark |
|---|---|---|---|---|---|---|
| R291 | 1-216-081-00 | METAL CHIP | 22K | 5% | 1/10W | |
| R292 | 1-216-089-00 | METAL CHIP | 47K | 5% | 1/10W | |
| R293 | 1-216-111-00 | METAL CHIP | 390K | 5% | 1/10W | |
| R294 | 1-216-071-00 | METAL CHIP | 8.2K | 5% | 1/10W | |
| R297 | 1-216-295-00 | METAL CHIP | 0 | 5% | 1/10W | |
| R298 | 1-216-073-00 | METAL CHIP | 10K | 5% | 1/10W | |
| R299 | 1-216-121-00 | METAL CHIP | 1M | 5% | 1/10W | |
| R301 | 1-216-049-00 | METAL CHIP | 1K | 5% | 1/10W | |
| R302 | 1-216-081-00 | METAL CHIP | 22K | 5% | 1/10W | |
| R303 | 1-216-081-00 | METAL CHIP | 22K | 5% | 1/10W | |
| R304 | 1-216-057-00 | METAL CHIP | 2.2K | 5% | 1/10W | |
| R305 | 1-216-043-00 | METAL CHIP | 560 | 5% | 1/10W | |
| R306 | 1-216-065-00 | METAL CHIP | 4.7K | 5% | 1/10W | |
| R307 | 1-216-049-00 | METAL CHIP | 1K | 5% | 1/10W | |
| R309 | 1-216-049-00 | METAL CHIP | 1K | 5% | 1/10W | |
| R310 | 1-216-081-00 | METAL CHIP | 22K | 5% | 1/10W | |
| R311 | 1-216-081-00 | METAL CHIP | 22K | 5% | 1/10W | |
| R312 | 1-216-059-00 | METAL CHIP | 2.7K | 5% | 1/10W | |
| R313 | 1-216-049-00 | METAL CHIP | 1K | 5% | 1/10W | |
| R317 | 1-216-049-00 | METAL CHIP | 1K | 5% | 1/10W | |
| R318 | 1-216-065-00 | METAL CHIP | 4.7K | 5% | 1/10W | |
| R319 | 1-216-041-00 | METAL CHIP | 470 | 5% | 1/10W | |
| R320 | 1-216-081-00 | METAL CHIP | 22K | 5% | 1/10W | |
| R321 | 1-216-089-00 | METAL CHIP | 47K | 5% | 1/10W | |
| R322 | 1-216-043-00 | METAL CHIP | 560 | 5% | 1/10W | |
| R323 | 1-216-093-00 | METAL CHIP | 68K | 5% | 1/10W | |
| R324 | 1-216-089-00 | METAL CHIP | 47K | 5% | 1/10W | |
| R325 | 1-216-059-00 | METAL CHIP | 2.7K | 5% | 1/10W | |
| R326 | 1-216-077-00 | METAL CHIP | 15K | 5% | 1/10W | |
| R327 | 1-216-095-00 | METAL CHIP | 82K | 5% | 1/10W | |
| R328 | 1-216-097-00 | METAL CHIP | 100K | 5% | 1/10W | |
| R329 | 1-216-099-00 | METAL CHIP | 120K | 5% | 1/10W | |
| R330 | 1-216-071-00 | METAL CHIP | 8.2K | 5% | 1/10W | |
| R331 | 1-216-057-00 | METAL CHIP | 2.2K | 5% | 1/10W | |
| R332 | 1-216-053-00 | METAL CHIP | 1.5K | 5% | 1/10W | |
| R333 | 1-216-053-00 | METAL CHIP | 1.5K | 5% | 1/10W | |
| R334 | 1-216-053-00 | METAL CHIP | 1.5K | 5% | 1/10W | |
| R335 | 1-216-053-00 | METAL CHIP | 1.5K | 5% | 1/10W | |
| R336 | 1-216-053-00 | METAL CHIP | 1.5K | 5% | 1/10W | |
| R337 | 1-216-065-00 | METAL CHIP | 4.7K | 5% | 1/10W | |
| R338 | 1-216-089-00 | METAL CHIP | 47K | 5% | 1/10W | |
| R339 | 1-216-063-00 | METAL CHIP | 3.9K | 5% | 1/10W | |
| R340 | 1-216-073-00 | METAL CHIP | 10K | 5% | 1/10W | |
| R341 | 1-216-059-00 | METAL CHIP | 2.7K | 5% | 1/10W | |
| R342 | 1-216-121-00 | METAL CHIP | 1M | 5% | 1/10W | |
| R343 | 1-216-039-00 | METAL CHIP | 390 | 5% | 1/10W | |
| R344 | 1-216-115-00 | METAL CHIP | 560K | 5% | 1/10W | |
| R345 | 1-216-073-00 | METAL CHIP | 10K | 5% | 1/10W | |
| R346 | 1-216-049-00 | METAL CHIP | 1K | 5% | 1/10W | |
| R407 | 1-216-049-00 | METAL CHIP | 1K | 5% | 1/10W | |
| R408 | 1-216-022-00 | METAL CHIP | 75 | 5% | 1/10W | (WG MODEL) |
| R408 | 1-216-057-00 | METAL CHIP | 39 | 5% | 1/10W | (AEP MODEL) |
| R413 | 1-216-045-00 | METAL CHIP | 680 | 5% | 1/10W | |
| R414 | 1-216-045-00 | METAL CHIP | 680 | 5% | 1/10W | |
| R415 | 1-216-065-00 | METAL CHIP | 4.7K | 5% | 1/10W | |
| R416 | 1-216-061-00 | METAL CHIP | 3.3K | 5% | 1/10W | |
| R417 | 1-216-065-00 | METAL CHIP | 4.7K | 5% | 1/10W | |
| R425 | 1-216-049-00 | METAL CHIP | 1K | 5% | 1/10W | |
| R427 | 1-216-047-00 | METAL CHIP | 820 | 5% | 1/10W | |
| R428 | 1-216-295-00 | METAL CHIP | 0 | 5% | 1/10W | |
| R429 | 1-216-041-00 | METAL CHIP | 470 | 5% | 1/10W | |
| R430 | 1-216-073-00 | METAL CHIP | 10K | 5% | 1/10W | |
| R431 | 1-216-073-00 | METAL CHIP | 10K | 5% | 1/10W | |
| R432 | 1-216-029-00 | METAL CHIP | 150 | 5% | 1/10W | |
| R433 | 1-216-049-00 | METAL CHIP | 1K | 5% | 1/10W | |
| R434 | 1-216-081-00 | METAL CHIP | 22K | 5% | 1/10W | (WG MODEL) |
| R435 | 1-216-081-00 | METAL CHIP | 22K | 5% | 1/10W | (WG MODEL) |
| R436 | 1-216-049-00 | METAL CHIP | 1K | 5% | 1/10W | (WG MODEL) |
| R437 | 1-216-022-00 | METAL CHIP | 75 | 5% | 1/10W | |
| R440 | 1-216-081-00 | METAL CHIP | 22K | 5% | 1/10W | |
| R441 | 1-216-069-00 | METAL CHIP | 6.8K | 5% | 1/10W | |
| R442 | 1-216-089-00 | METAL CHIP | 47K | 5% | 1/10W | |
| R443 | 1-216-033-00 | METAL CHIP | 220 | 5% | 1/10W | |
| R444 | 1-216-047-00 | METAL CHIP | 820 | 5% | 1/10W | (AEP MODEL) |
| R444 | 1-216-048-00 | METAL CHIP | 910 | 5% | 1/10W | (WG MODEL) |
| R445 | 1-216-073-00 | METAL CHIP | 10K | 5% | 1/10W | |
| R446 | 1-216-081-00 | METAL CHIP | 22K | 5% | 1/10W | |
| R447 | 1-216-081-00 | METAL CHIP | 22K | 5% | 1/10W | |
| R452 | 1-216-045-00 | METAL CHIP | 680 | 5% | 1/10W | (AEP MODEL) |
| R454 | 1-216-049-00 | METAL CHIP | 1K | 5% | 1/10W | |
| R456 | 1-216-049-00 | METAL CHIP | 1K | 5% | 1/10W | |
| R457 | 1-216-045-00 | METAL CHIP | 680 | 5% | 1/10W | |
| R458 | 1-216-025-00 | METAL CHIP | 100 | 5% | 1/10W | (WG MODEL) |
| R459 | 1-216-049-00 | METAL CHIP | 1K | 5% | 1/10W | |
| R460 | 1-216-051-00 | METAL CHIP | 1.2K | 5% | 1/10W | |
| R470 | 1-249-408-11 | CARBON | 180 | 5% | 1/6W | |
| R471 | 1-216-021-00 | METAL CHIP | 68 | 5% | 1/10W | |
| R472 | 1-216-030-00 | METAL CHIP | 160 | 5% | 1/10W | |
| R473 | 1-216-051-00 | METAL CHIP | 1.2K | 5% | 1/10W | |
| R474 | 1-216-049-00 | METAL CHIP | 1K | 5% | 1/10W | |
| R480 | 1-216-295-00 | METAL CHIP | 0 | 5% | 1/10W | (AEP MODEL) |
| R481 | 1-216-295-00 | METAL CHIP | 0 | 5% | 1/10W | (AEP MODEL) |
| R482 | 1-216-295-00 | METAL CHIP | 0 | 5% | 1/10W | (WG MODEL) |
| R482 | 1-216-015-00 | METAL CHIP | 39 | 5% | 1/10W | (AEP MODEL) |
| R483 | 1-216-296-00 | METAL CHIP | 0 | 5% | 1/8W | |
| R484 | 1-216-064-00 | METAL CHIP | 4.3K | 5% | 1/10W | |
| R485 | 1-216-048-00 | METAL CHIP | 910 | 5% | 1/10W | |
| R486 | 1-216-035-00 | METAL CHIP | 270 | 5% | 1/10W | |
| R501 | 1-216-296-00 | METAL CHIP | 0 | 5% | 1/8W | |

VARIABLE RESISTOR

| | | |
|---|---|---|
| RV001 | 1-228-989-00 | RES, ADJ, CARBON 470 |
| RV002 | 1-228-989-00 | RES, ADJ, CARBON 470 |
| RV005 | 1-228-994-00 | RES, ADJ, CARBON 10K |
| RV006 | 1-228-994-00 | RES, ADJ, CARBON 10K |
| RV007 | 1-228-994-00 | RES, ADJ, CARBON 10K |

When indicating parts by reference number, please include the board name.

| Ref.No | Part No. | Description | | | Remark |
|---|---|---|---|---|---|
| RV008 | 1-228-994-00 | RES, ADJ, CARBON 10K | | | |
| RV009 | 1-228-994-00 | RES, ADJ, CARBON 10K | | | |
| RV010 | 1-228-993-00 | RES, ADJ, CARBON 4.7K | | | |
| RV011 | 1-228-994-00 | RES, ADJ, CARBON 10K | | | |
| RV012 | 1-228-994-00 | RES, ADJ, CARBON 10K | | | |
| RV013 | 1-228-998-00 | RES, ADJ, CARBON 220K | | | |
| RV014 | 1-228-996-00 | RES, ADJ, CARBON 47K | | | |
| | | TRANSFORMER | | | |
| T001 | 1-235-437-11 | BPF, PB C | | | |
| T004 | 1-409-396-11 | REC C TRAP | | | |
| T005 | 1-409-397-11 | TRAP | | | |
| T006 | 1-235-632-11 | BPF | | | |
| T007 | 1-235-633-11 | BPF | | | |
| | | THERMISTOR | | | |
| TH001 | 1-800-200-00 | THERMISTOR S-3K | | | |
| | | CRYSTAL | | | |
| X201 | 1-567-442-11 | VIBRATOR, CRYSTAL | | | |
| ********** | | | | | |
| *A-7068-030-A | | CH-44 BOARD, COMPLETE | | | |
| | | ********** | | | |
| | | CAPASITOR | | | |
| C001 | 1-163-093-00 | CERAMIC CHIP 10PF | 5% | 50V | |
| C002 | 1-163-141-00 | CERAMIC CHIP 0.001MF | 10% | 50V | |
| C003 | 1-163-108-00 | CERAMIC CHIP 43PF | 5% | 50V | |
| C004 | 1-163-129-00 | CERAMIC CHIP 330PF | 5% | 50V | |
| C005 | 1-163-129-00 | CERAMIC CHIP 330PF | 5% | 50V | |
| C006 | 1-163-033-00 | CERAMIC CHIP 0.022MF | | 50V | |
| C007 | 1-163-063-00 | CERAMIC CHIP 0.022MF | 10% | 50V | |
| C008 | 1-131-358-41 | TANTALUM 6.8MF | 10% | 25V | |
| C009 | 1-124-245-00 | ELECT 4.7MF | 20% | 35V | |
| C011 | 1-163-021-00 | CERAMIC CHIP 0.01MF | | 50V | |
| C012 | 1-163-021-00 | CERAMIC CHIP 0.01MF | | 50V | |
| C013 | 1-163-075-00 | CERAMIC CHIP 0.047MF | | 50V | |
| C014 | 1-124-462-00 | ELECT 10MF | 20% | 16V | |
| C015 | 1-163-121-00 | CERAMIC CHIP 150PF | 5% | 50V | |
| C016 | 1-163-021-00 | CERAMIC CHIP 0.01MF | | 50V | |
| C017 | 1-124-257-00 | ELECT 2.2MF | 20% | 50V | |
| C018 | 1-124-251-00 | ELECT 0.22MF | 20% | 50V | |
| C019 | 1-163-063-00 | CERAMIC CHIP 0.022MF | | 50V | |
| C020 | 1-163-076-00 | CERAMIC CHIP 0.068MF | | 50V | |
| C021 | 1-124-257-00 | ELECT 2.2MF | 20% | 50V | |
| C022 | 1-124-257-00 | ELECT 2.2MF | 20% | 50V | |
| C023 | 1-163-141-00 | CERAMIC CHIP 0.001MF | 10% | 50V | |
| C024 | 1-163-141-00 | CERAMIC CHIP 0.001MF | 5% | 50V | |
| C025 | 1-163-075-00 | CERAMIC CHIP 0.047MF | | 50V | |
| C026 | 1-163-117-00 | CERAMIC CHIP 100PF | 5% | 50V | |
| C027 | 1-163-141-00 | CERAMIC CHIP 0.001MF | 10% | 50V | |

| Ref.No | Part No. | Description | | | Remark |
|---|---|---|---|---|---|
| C028 | 1-124-462-00 | ELECT 10MF | 20% | 16V | |
| C029 | 1-163-021-00 | CERAMIC CHIP 0.01MF | | 50V | |
| C030 | 1-163-088-00 | CERAMIC CHIP 5PF | 0.25PF | 50V | |
| C031 | 1-163-021-00 | CERAMIC CHIP 0.01MF | | 50V | |
| C032 | 1-163-129-00 | CERAMIC CHIP 330PF | 5% | 50V | |
| C033 | 1-163-091-00 | CERAMIC CHIP 8PF | 0.25PF | 50V | |
| C034 | 1-163-097-00 | CERAMIC CHIP 15PF | 5% | 50V | |
| C035 | 1-163-123-00 | CERAMIC CHIP 180PF | 5% | 50V | |
| C036 | 1-163-129-00 | CERAMIC CHIP 330PF | 5% | 50V | |
| C037 | 1-163-129-00 | CERAMIC CHIP 330PF | 5% | 50V | |
| C038 | 1-124-249-00 | ELECT 0.1MF | 20% | 50V | |
| C039 | 1-124-252-00 | ELECT 0.33MF | 20% | 50V | |
| C040 | 1-163-021-00 | CERAMIC CHIP 0.01MF | | 50V | |
| | | TRIMMER | | | |
| CV001 | 1-141-227-00 | CAP, CERAMIC TRIMMER | | | |
| | | IC | | | |
| IC001 | 8-752-003-20 | IC CX20032 | | | |
| IC002 | 8-752-202-10 | IC CX22021 | | | |
| | | COIL | | | |
| L001 | 1-408-607-00 | MICRO INDUCTOR 22UH | | | |
| L002 | 1-407-172-XX | MICRO INDUCTOR 180UH | | | |
| L003 | 1-407-168-XX | MICRO INDUCTOR 82UH | | | |
| L004 | 1-407-188-XX | MICRO INDUCTOR 6.8UH | | | |
| | | TRANSISTOR | | | |
| Q001 | 8-729-202-38 | TRANSISTOR 2SC3326N | | | |
| | | RESISTOR | | | |
| R002 | 1-216-295-00 | METAL CHIP 0 | 5% | 1/10W | |
| R003 | 1-216-073-00 | METAL CHIP 10K | 5% | 1/10W | |
| R004 | 1-216-057-00 | METAL CHIP 2.2K | 5% | 1/10W | |
| R005 | 1-216-065-00 | METAL CHIP 4.7K | 5% | 1/10W | |
| R007 | 1-216-053-00 | METAL CHIP 1.5K | 5% | 1/10W | |
| R008 | 1-216-065-00 | METAL CHIP 4.7K | 5% | 1/10W | |
| R009 | 1-216-025-00 | METAL CHIP 100 | 5% | 1/10W | |
| R010 | 1-216-081-00 | METAL CHIP 22K | 5% | 1/10W | |
| R011 | 1-216-097-00 | METAL CHIP 100K | 5% | 1/10W | |
| R012 | 1-216-069-00 | METAL CHIP 6.8K | 5% | 1/10W | |
| R013 | 1-216-057-00 | METAL CHIP 2.2K | 5% | 1/10W | |
| R014 | 1-216-049-00 | METAL CHIP 1K | 5% | 1/10W | |
| R015 | 1-216-081-00 | METAL CHIP 22K | 5% | 1/10W | |
| R016 | 1-216-081-00 | METAL CHIP 22K | 5% | 1/10W | |
| R017 | 1-216-049-00 | METAL CHIP 1K | 5% | 1/10W | |
| R018 | 1-216-049-00 | METAL CHIP 1K | 5% | 1/10W | |
| R019 | 1-216-077-00 | METAL CHIP 15K | 5% | 1/10W | |
| R020 | 1-216-037-00 | METAL CHIP 330 | 5% | 1/10W | |
| R021 | 1-216-077-00 | METAL CHIP 15K | 5% | 1/10W | |
| R022 | 1-216-081-00 | METAL CHIP 22K | 5% | 1/10W | |
| R023 | 1-216-065-00 | METAL CHIP 4.7K | 5% | 1/10W | |

When indicating parts by reference number, please include the board name.

| Ref.No | Part No. | Description | | | | Remark |
|---|---|---|---|---|---|---|
| R024 | 1-216-025-00 | METAL CHIP | 100 | 5% | 1/10W | |
| R025 | 1-216-057-00 | METAL CHIP | 2.2K | 5% | 1/10W | |
| R026 | 1-216-073-00 | METAL CHIP | 10K | 5% | 1/10W | |
| R029 | 1-216-103-00 | METAL CHIP | 180K | 5% | 1/10W | |
| R030 | 1-216-065-00 | METAL CHIP | 4.7K | 5% | 1/10W | |
| | | VARIABLE RESISTOR | | | | |
| RV001 | 1-230-524-11 | RES, ADJ, SOLID 22K | | | | |
| RV002 | 1-230-523-11 | RES, ADJ, SOLID 10K | | | | |
| | | TRANSFORMER | | | | |
| T001 | 1-409-394-11 | TRAP, CHROMA EMPHASIS | | | | |
| | | JACK | | | | |
| W001 | *1-566-103-11 | PIN, BOARD TO BOARD, 19P | | | | |
| W002 | *1-566-102-11 | PIN, BOARD TO BOARD, 18P | | | | |
| | | CRYSTAL | | | | |
| X001 | 1-527-345-00 | CRYSTAL, OSC (4.43MHz) | | | | |
| ********** | | | | | | |
| IC011 | 1-807-844-11 | IC BS6324<br>********* | | | | |
| | | CAPACITOR | | | | |
| C001 | 1-124-462-00 | ELECT | 10MF | 20% | 16V | |
| C002 | 1-163-035-00 | CERAMIC CHIP | 0.047MF | | 50V | |
| C003 | 1-163-021-00 | CERAMIC CHIP | 0.01MF | | 50V | |
| C004 | 1-163-021-00 | CERAMIC CHIP | 0.01MF | | 50V | |
| C005 | 1-163-021-00 | CERAMIC CHIP | 0.01MF | | 50V | |
| C006 | 1-163-021-00 | CERAMIC CHIP | 0.01MF | | 50V | |
| C007 | 1-163-035-00 | CERAMIC CHIP | 0.047MF | | 50V | |
| C008 | 1-163-141-00 | CERAMIC CHIP | 1000PF | 5% | 50V | |
| C009 | 1-163-021-00 | CERAMIC CHIP | 0.01MF | | 50V | |
| C010 | 1-163-021-00 | CERAMIC CHIP | 0.01MF | | 50V | |
| C011 | 1-163-021-00 | CERAMIC CHIP | 0.01MF | | 50V | |
| C012 | 1-163-033-00 | CERAMIC CHIP | 0.022MF | | 50V | |
| C013 | 1-163-095-00 | CERAMIC CHIP | 12PF | 5% | 50V | |
| C014 | 1-163-021-00 | CERAMIC CHIP | 0.01MF | | 50V | |
| C015 | 1-163-021-00 | CERAMIC CHIP | 0.01MF | | 50V | |
| C016 | 1-163-021-00 | CERAMIC CHIP | 0.01MF | | 50V | |
| C018 | 1-124-462-00 | ELECT | 10MF | 20% | 16V | |
| C019 | 1-163-035-00 | CERAMIC CHIP | 0.047MF | | 50V | |
| | | DIODE | | | | |
| D001 | 8-719-911-19 | DIODE 1SS119 | | | | |
| D002 | 8-719-911-19 | DIODE 1SS119 | | | | |
| | | TRANSISTOR | | | | |
| DT001 | 8-729-901-01 | TRANSISTOR DTC144EK | | | | |

| Ref.No | Part No. | Description | | | | Remark |
|---|---|---|---|---|---|---|
| | | CONNECTOR | | | | |
| J001 | 1-564-549-11 | PIN, BOARD TO BOARD 10P | | | | |
| J002 | 1-564-548-11 | PIN, BOARD TO BOARD 5P | | | | |
| | | COIL | | | | |
| L001 | 1-408-415-00 | MICRO INDUCTOR 33UH | | | | |
| L002 | 1-408-415-00 | MICRO INDUCTOR 33UH | | | | |
| | | TRANSISTOR | | | | |
| Q001 | 8-729-100-66 | TRANSISTOR 2SC1623 | | | | |
| Q002 | 8-729-100-66 | TRANSISTOR 2SC1623 | | | | |
| Q003 | 8-729-100-66 | TRANSISTOR 2SC1623 | | | | |
| Q004 | 8-729-100-66 | TRANSISTOR 2SC1623 | | | | |
| Q005 | 8-729-100-66 | TRANSISTOR 2SC1623 | | | | |
| | | RESISTOR | | | | |
| R001 | 1-216-057-00 | METAL CHIP | 2.2K | 5% | 1/10W | |
| R002 | 1-216-049-00 | METAL CHIP | 1K | 5% | 1/10W | |
| R003 | 1-216-041-00 | METAL CHIP | 470 | 5% | 1/10W | |
| R004 | 1-216-033-00 | METAL CHIP | 220 | 5% | 1/10W | |
| R005 | 1-216-047-00 | METAL CHIP | 820 | 5% | 1/10W | |
| R006 | 1-216-045-00 | METAL CHIP | 680 | 5% | 1/10W | |
| R008 | 1-216-059-00 | METAL CHIP | 2.7K | 5% | 1/10W | |
| R009 | 1-216-035-00 | METAL CHIP | 270 | 5% | 1/10W | |
| R010 | 1-216-035-00 | METAL CHIP | 270 | 5% | 1/10W | |
| R011 | 1-216-041-00 | METAL CHIP | 470 | 5% | 1/10W | |
| R012 | 1-216-077-00 | METAL CHIP | 15K | 5% | 1/10W | |
| R013 | 1-216-073-00 | METAL CHIP | 10K | 5% | 1/10W | |
| R014 | 1-216-043-00 | METAL CHIP | 560 | 5% | 1/10W | |
| R016 | 1-216-075-00 | METAL CHIP | 12K | 5% | 1/10W | |
| R017 | 1-216-073-00 | METAL CHIP | 10K | 5% | 1/10W | |
| R018 | 1-216-033-00 | METAL CHIP | 220 | 5% | 1/10W | |
| R019 | 1-216-021-00 | METAL CHIP | 68 | 5% | 1/10W | |
| R021 | 1-216-043-00 | METAL CHIP | 560 | 5% | 1/10W | |
| R022 | 1-216-045-00 | METAL CHIP | 680 | 5% | 1/10W | |
| R023 | 1-216-071-00 | METAL CHIP | 8.2K | 5% | 1/10W | |
| R024 | 1-216-039-00 | METAL CHIP | 390 | 5% | 1/10W | |
| R025 | 1-216-079-00 | METAL CHIP | 18K | 5% | 1/10W | |
| R026 | 1-216-079-00 | METAL CHIP | 18K | 5% | 1/10W | |
| R027 | 1-216-049-00 | METAL CHIP | 1K | 5% | 1/10W | |
| ********** | | | | | | |
| IC012 | 1-807-846-11 | IC BS7443<br>********** | | | | |
| | | CAPACITOR | | | | |
| C001 | 1-163-120-00 | CERAMIC CHIP | 130PF | 5% | 50V | |
| C002 | 1-163-035-00 | CERAMIC CHIP | 0.047MF | | 50V | |
| C003 | 1-163-035-00 | CERAMIC CHIP | 0.047MF | | 50V | |
| C004 | 1-163-035-00 | CERAMIC CHIP | 0.047MF | | 50V | |
| C005 | 1-124-236-00 | CERAMIC CHIP | 47MF | 20% | 16V | |
| C006 | 1-163-035-00 | CERAMIC CHIP | 0.047MF | | 50V | |

When indicating parts by reference number, please include the board name.

| Ref.No | Part No. | Description | | Remark |
|---|---|---|---|---|
| C007 | 1-163-141-00 | CERAMIC CHIP 1000PF | 5% | 50V |
| C008 | 1-163-035-00 | CERAMIC CHIP 0.047MF | | 50V |
| C009 | 1-163-120-00 | CERAMIC CHIP 130PF | 5% | 50V |
| C010 | 1-163-035-00 | CERAMIC CHIP 0.047MF | | 50V |
| C011 | 1-163-035-00 | CERAMIC CHIP 0.047MF | | 50V |
| C012 | 1-163-115-00 | CERAMIC CHIP 82PF | 5% | 50V |
| C013 | 1-163-035-00 | CERAMIC CHIP 0.047MF | | 50V |
| C014 | 1-124-255-00 | CERAMIC CHIP 1.0MF | 20% | 50V |
| | | DIODE | | |
| D001 | 8-719-911-19 | DIODE 1SS119 | | |
| D002 | 8-719-911-19 | DIODE 1SS119 | | |
| D003 | 8-719-911-19 | DIODE 1SS119 | | |
| D004 | 8-719-911-19 | DIODE 1SS119 | | |
| | | TRANSISTOR | | |
| DT001 | 8-729-901-04 | TRANSISTOR DTA114EK | | |
| DT002 | 8-729-901-04 | TRANSISTOR DTA114EK | | |
| DT003 | 8-729-901-04 | TRANSISTOR DTA114EK | | |
| DT004 | 8-729-901-04 | TRANSISTOR DTA114EK | | |
| DT005 | 8-729-901-04 | TRANSISTOR DTA114EK | | |
| DT006 | 8-729-901-04 | TRANSISTOR DTA114EK | | |
| | | IC | | |
| IC001 | 8-759-925-60 | IC BA401 | | |
| | | CONNECTOR | | |
| J001 | 1-506-592-11 | PIN, BOARD TO BOARD 4P | | |
| J002 | 1-506-592-11 | PIN, BOARD TO BOARD 4P | | |
| | | TRANSISTOR | | |
| Q001 | 8-729-100-66 | TRANSISTOR 2SC1623 | | |
| Q002 | 8-729-100-66 | TRANSISTOR 2SC1623 | | |
| Q003 | 8-729-100-66 | TRANSISTOR 2SC1623 | | |
| Q004 | 8-729-100-66 | TRANSISTOR 2SC1623 | | |
| | | RESISTOR | | |
| R001 | 1-216-067-00 | METAL CHIP 5.6K | 5% | 1/10W |
| R002 | 1-216-063-00 | METAL CHIP 3.9K | 5% | 1/10W |
| R003 | 1-216-041-00 | METAL CHIP 470 | 5% | 1/10W |
| R004 | 1-216-037-00 | METAL CHIP 330 | 5% | 1/10W |
| R005 | 1-216-039-00 | METAL CHIP 390 | 5% | 1/10W |
| R006 | 1-216-049-00 | METAL CHIP 1K | 5% | 1/10W |
| R007 | 1-216-049-00 | METAL CHIP 1K | 5% | 1/10W |
| R008 | 1-216-031-00 | METAL CHIP 180 | 5% | 1/10W |
| R009 | 1-216-057-00 | METAL CHIP 2.2K | 5% | 1/10W |
| R010 | 1-216-063-00 | METAL CHIP 3.9K | 5% | 1/10W |
| R011 | 1-216-057-00 | METAL CHIP 2.2K | 5% | 1/10W |
| R012 | 1-216-051-00 | METAL CHIP 1.2K | 5% | 1/10W |
| R013 | 1-216-049-00 | METAL CHIP 1K | 5% | 1/10W |
| R014 | 1-216-057-00 | METAL CHIP 2.2K | 5% | 1/10W |
| R015 | 1-216-069-00 | METAL CHIP 6.8K | 5% | 1/10W |

| Ref.No | Part No. | Description | | Remark |
|---|---|---|---|---|
| R016 | 1-216-061-00 | METAL CHIP 3.3K | 5% 1/10W | |
| R017 | 1-216-045-00 | METAL CHIP 680 | 5% 1/10W | |
| R018 | 1-216-033-00 | METAL CHIP 220 | 5% 1/10W | |
| R019 | 1-216-035-00 | METAL CHIP 270 | 5% 1/10W | |
| R020 | 1-216-053-00 | METAL CHIP 1.5K | 5% 1/10W | |
| R021 | 1-216-073-00 | METAL CHIP 10K | 5% 1/10W | |
| R022 | 1-216-045-00 | METAL CHIP 680 | 5% 1/10W | |
| R023 | 1-216-045-00 | METAL CHIP 680 | 5% 1/10W | |
| R024 | 1-216-065-00 | METAL CHIP 4.7K | 5% 1/10W | |
| R025 | 1-216-065-00 | METAL CHIP 4.7K | 5% 1/10W | |
| R026 | 1-216-065-00 | METAL CHIP 4.7K | 5% 1/10W | |
| R027 | 1-216-073-00 | METAL CHIP 10K | 5% 1/10W | |
| R028 | 1-216-295-00 | METAL CHIP 0 | 5% 1/10W | |

**********

*A-7060-470-A FT-13 BOARD, COMPLETE (WG MODEL)
**********

*A-7060-477-A FT-13 BOARD, COMPLETE (AEP MODEL)
**********

*3-689-521-01 HOLDER, LED, ROUND
3-691-611-11 KNOB (S), CONTROL
*3-697-607-11 HOLDER (SU), LED
*3-716-870-01 HOLDER (LEFT), INDICATION TUBE
*3-716-871-01 HOLDER(RIGHT), INDICATION TUBE

| | | | | |
|---|---|---|---|---|
| | | CAPACITOR | | |
| C003 | 1-163-093-00 | CERAMIC CHIP 10PF | 5% | 50V |
| C004 | 1-163-117-00 | CERAMIC CHIP 100PF | 5% | 50V |
| C005 | 1-163-117-00 | CERAMIC CHIP 100PF | 5% | 50V |
| C006 | 1-163-021-00 | CERAMIC CHIP 0.01MF | | 50V |
| C009 | 1-163-021-00 | CERAMIC CHIP 0.01MF | | 50V |
| C010 | 1-124-258-00 | ELECT 3.3MF | 20% | 50V |
| C011 | 1-163-105-00 | CERAMIC CHIP 33PF | 5% | 50V |
| C012 | 1-163-105-00 | CERAMIC CHIP 33PF | 5% | 50V |
| C013 | 1-163-021-00 | CERAMIC CHIP 0.01MF | | 50V |
| C014 | 1-163-021-00 | CERAMIC CHIP 0.01MF | | 50V |
| C015 | 1-124-255-00 | ELECT 1MF | 20% | 50V |
| C016 | 1-124-462-00 | ELECT 10MF | 20% | 16V |
| C017 | 1-163-021-00 | CERAMIC CHIP 0.01MF | | 50V |
| C018 | 1-163-021-00 | CERAMIC CHIP 0.01MF | | 50V |
| C019 | 1-124-462-00 | ELECT 10MF | 20% | 16V |
| C020 | 1-163-035-00 | CERAMIC CHIP 0.047MF | 10% | 25V |
| | | TRIMMER | | |
| CV001 | 1-141-294-11 | CAP, TRIMMER | | |
| | | DIODE | | |
| D001 | 8-719-801-52 | DIODE 1SS190 | | |
| D002 | 8-719-801-52 | DIODE 1SS190 | | |
| D003 | 8-719-801-52 | DIODE 1SS190 | | |
| D004 | 8-719-801-52 | DIODE 1SS190 | | |
| D005 | 8-719-801-52 | DIODE 1SS190 | | |

When indicating parts by reference number, please include the board name.

| Ref.No | Part No. | Description | Remark |
|---|---|---|---|
| D006 | 8-719-801-52 | DIODE 1SS190 | |
| D007 | 8-719-801-52 | DIODE 1SS190 | |
| D008 | 8-719-801-52 | DIODE 1SS190 | |
| D009 | 8-719-801-52 | DIODE 1SS190 | |
| D010 | 8-719-801-52 | DIODE 1SS190 | |
| D011 | 8-719-801-52 | DIODE 1SS190 | |
| D012 | 8-719-801-52 | DIODE 1SS190 | |
| D013 | 8-719-801-52 | DIODE 1SS190 | |
| D024 | 8-719-106-43 | DIODE RD9.1M | |
| D025 | 8-719-801-52 | DIODE 1SS190 | |
| D026 | 8-719-801-52 | DIODE 1SS190 | |
| D028 | 8-719-106-22 | DIODE RD7.5M | |
| D029 | 8-719-106-22 | DIODE RD7.5M | |
| D030 | 8-719-106-22 | DIODE RD7.5M | |
| D031 | 8-719-301-49 | DIODE SEL2810A | |
| D032 | 8-719-812-32 | DIODE TLY123 | |
| D033 | 8-719-812-32 | DIODE TLY123 | |
| D034 | 8-719-812-32 | DIODE TLY123 | |
| D035 | 8-719-812-33 | DIODE TLG123A | |
| D036 | 8-719-812-33 | DIODE TLG123A | |
| D037 | 8-719-812-31 | DIODE TLR123 | |
| D038 | 8-719-812-31 | DIODE TLR123 | |
| D039 | 8-719-812-31 | DIODE TLR123 | |
| D040 | 8-719-301-49 | DIODE SEL2810A | |
| D041 | 8-719-301-49 | DIODE SEL2810A | |
| D042 | 8-719-812-32 | DIODE TLY123 | |
| D043 | 8-719-812-33 | DIODE TLG123A | |
| D044 | 8-719-812-31 | DIODE TLR123 | |
| D045 | 8-719-301-49 | DIODE SEL2810A | |

INDICATOR TUBE

| | | | |
|---|---|---|---|
| FL001 | 1-519-410-11 | INDICATOR TUBE, FLUORESCENT | |

IC

| | | | |
|---|---|---|---|
| IC001 | 8-759-111-98 | IC UPD75208G-521-1B | |
| IC002 | 8-752-800-70 | IC CXP5016-191Q | |
| IC003 | 8-759-604-09 | IC M51955BL | |
| IC004 | 8-759-201-61 | IC TC40H004F | |
| IC005 | 8-759-111-66 | IC UPD7566G-505 | |
| IC006 | 8-759-937-21 | IC CXD1078M | |

TRANSISTOR

| | | | |
|---|---|---|---|
| Q001 | 8-729-162-44 | TRANSISTOR 2SB624-BV4 | |

RESISTOR

| | | | | | |
|---|---|---|---|---|---|
| R001 | 1-216-073-00 | METAL CHIP | 10K | 5% | 1/10W |
| R002 | 1-216-073-00 | METAL CHIP | 10K | 5% | 1/10W |
| R003 | 1-216-073-00 | METAL CHIP | 10K | 5% | 1/10W |
| R004 | 1-216-099-00 | METAL CHIP | 120K | 5% | 1/10W |
| R005 | 1-216-105-00 | METAL CHIP | 220K | 5% | 1/10W |
| R006 | 1-216-073-00 | METAL CHIP | 10K | 5% | 1/10W |
| R007 | 1-216-081-00 | METAL CHIP | 22K | 5% | 1/10W |
| R008 | 1-216-081-00 | METAL CHIP | 22K | 5% | 1/10W |
| R009 | 1-216-093-00 | METAL CHIP | 68K | 5% | 1/10W |
| R010 | 1-216-073-00 | METAL CHIP | 10K | 5% | 1/10W |
| R011 | 1-216-073-00 | METAL CHIP | 10K | 5% | 1/10W |
| R012 | 1-216-085-00 | METAL CHIP | 33K | 5% | 1/10W |
| R013 | 1-216-081-00 | METAL CHIP | 22K | 5% | 1/10W |
| R014 | 1-216-097-00 | METAL CHIP | 100K | 5% | 1/10W |
| R015 | 1-216-097-00 | METAL CHIP | 100K | 5% | 1/10W |
| R016 | 1-216-097-00 | METAL CHIP | 100K | 5% | 1/10W |
| R017 | 1-216-073-00 | METAL CHIP | 10K | 5% | 1/10W |
| R018 | 1-216-113-00 | METAL CHIP | 470K | 5% | 1/10W |
| R019 | 1-216-113-00 | METAL CHIP | 470K | 5% | 1/10W |
| R020 | 1-216-113-00 | METAL CHIP | 470K | 5% | 1/10W |
| R021 | 1-216-069-00 | METAL CHIP | 6.8K | 5% | 1/10W |
| R022 | 1-216-073-00 | METAL CHIP | 10K | 5% | 1/10W |
| R023 | 1-216-073-00 | METAL CHIP | 10K | 5% | 1/10W |
| R024 | 1-216-073-00 | METAL CHIP | 10K | 5% | 1/10W |
| R025 | 1-216-073-00 | METAL CHIP | 10K | 5% | 1/10W |
| R026 | 1-216-073-00 | METAL CHIP | 10K | 5% | 1/10W |
| R028 | 1-216-073-00 | METAL CHIP | 10K | 5% | 1/10W |
| R029 | 1-216-065-00 | METAL CHIP | 4.7K | 5% | 1/10W |
| R031 | 1-216-295-00 | METAL CHIP | 0 | 5% | 1/10W (AEP MODEL) |
| R033 | 1-216-295-00 | METAL CHIP | 0 | 5% | 1/10W |
| R036 | 1-216-295-00 | METAL CHIP | 0 | 5% | 1/10W (AEP MODEL) |
| R037 | 1-216-295-00 | METAL CHIP | 0 | 5% | 1/10W (AEP MODEL) |
| R038 | 1-216-295-00 | METAL CHIP | 0 | 5% | 1/10W (AEP MODEL) |
| R041 | 1-216-097-00 | METAL CHIP | 100K | 5% | 1/10W |
| R042 | 1-216-097-00 | METAL CHIP | 100K | 5% | 1/10W |
| R043 | 1-216-097-00 | METAL CHIP | 100K | 5% | 1/10W |
| R044 | 1-216-097-00 | METAL CHIP | 100K | 5% | 1/10W |
| R045 | 1-216-097-00 | METAL CHIP | 100K | 5% | 1/10W |
| R051 | 1-216-041-00 | METAL CHIP | 470 | 5% | 1/10W |
| R052 | 1-216-041-00 | METAL CHIP | 470 | 5% | 1/10W |
| R053 | 1-216-041-00 | METAL CHIP | 470 | 5% | 1/10W |
| R055 | 1-216-041-00 | METAL CHIP | 470 | 5% | 1/10W |
| R056 | 1-216-041-00 | METAL CHIP | 470 | 5% | 1/10W |
| R057 | 1-216-041-00 | METAL CHIP | 470 | 5% | 1/10W |
| R058 | 1-216-041-00 | METAL CHIP | 470 | 5% | 1/10W |
| R059 | 1-216-041-00 | METAL CHIP | 470 | 5% | 1/10W |
| R060 | 1-216-041-00 | METAL CHIP | 470 | 5% | 1/10W |

VARIABLE RESISTOR

| | | | |
|---|---|---|---|
| RV001 | 1-237-219-11 | RES, VAR, CARBON 1K | |

SWITCH

| | | | |
|---|---|---|---|
| SW001 | 1-570-865-11 | SWITCH, SLIDE (WG MODEL) | |
| SW002 | 1-570-854-11 | SWITCH, SLIDE | |
| SW003 | 1-570-854-11 | SWITCH, SLIDE | |
| SW004 | 1-554-174-42 | SWITCH, KEY BOARD | |
| SW005 | 1-554-174-42 | SWITCH, KEY BOARD | |
| SW006 | 1-554-174-42 | SWITCH, KEY BOARD | |
| SW007 | 1-554-174-42 | SWITCH, KEY BOARD | |
| SW008 | 1-554-174-42 | SWITCH, KEY BOARD | |

When indicating parts by reference number, please include the board name.

| Ref.No | Part No. | Description | Remark |
|---|---|---|---|
| SW009 | 1-554-174-42 | SWITCH, KEY BOARD | |
| SW010 | 1-554-174-42 | SWITCH, KEY BOARD | |
| SW011 | 1-554-174-42 | SWITCH, KEY BOARD | |
| SW012 | 1-554-174-42 | SWITCH, KEY BOARD | |
| SW013 | 1-554-174-42 | SWITCH, KEY BOARD | |
| SW014 | 1-554-174-42 | SWITCH, KEY BOARD | |
| SW015 | 1-554-174-42 | SWITCH, KEY BOARD | |
| SW016 | 1-554-174-42 | SWITCH, KEY BOARD | |
| SW017 | 1-554-174-42 | SWITCH, KEY BOARD | |
| SW018 | 1-554-174-42 | SWITCH, KEY BOARD | |
| SW019 | 1-554-174-42 | SWITCH, KEY BOARD | |
| SW020 | 1-554-174-42 | SWITCH, KEY BOARD | |
| SW021 | 1-554-088-00 | SWITCH, KEY BOARD | |
| SW022 | 1-554-174-42 | SWITCH, KEY BOARD | |
| SW023 | 1-554-174-42 | SWITCH, KEY BOARD | |
| SW024 | 1-554-174-42 | SWITCH, KEY BOARD | |
| SW025 | 1-554-174-42 | SWITCH, KEY BOARD | |
| | | CRYSTAL | |
| X001 | 1-567-519-11 | VIBRATOR, CRYSTAL (4.19MHz) | |
| X002 | 1-567-714-11 | OSCILLATOR, CERAMIC (700KHz) | |
| X003 | 1-567-160-21 | OSCILLATOR, CERAMIC (4.19MHz) | |

**********

*A-7060-471-A TU-83 BOARD, COMPLETE (WG MODEL)
**********

*A-7060-607-A TU-83 BOARD, COMPLETE (AEP MODEL)
**********

CAPACITOR

| | | | | | |
|---|---|---|---|---|---|
| C001 | 1-130-493-00 | MYLAR | 0.068MF | 5% | 50V |
| C002 | 1-130-493-00 | MYLAR | 0.068MF | 5% | 50V |
| C003 | 1-163-105-00 | CERAMIC CHIP | 33PF | 5% | 50V |
| C004 | 1-123-318-00 | ELECT | 33MF | 20% | 16V |
| C005 | 1-163-017-00 | CERAMIC CHIP | 0.0047MF | 10% | 50V |
| C006 | 1-123-369-00 | ELECT | 4.7MF | 20% | 25V |
| C008 | 1-123-380-00 | ELECT | 1MF | 20% | 50V |
| C009 | 1-123-380-00 | ELECT | 1MF | 20% | 50V |
| C010 | 1-123-356-00 | ELECT | 10MF | 20% | 16V |
| C011 | 1-123-318-00 | ELECT | 33MF | 20% | 16V |
| C012 | 1-123-380-00 | ELECT | 1MF | 20% | 50V |
| C013 | 1-123-356-00 | ELECT | 10MF | 20% | 16V |
| C014 | 1-163-119-00 | CERAMIC CHIP | 120PF | 5% | 50V |
| C015 | 1-130-072-00 | FILM | 0.022MF | 2% | 100V |
| C016 | 1-123-318-00 | ELECT | 33MF | 20% | 16V |
| C017 | 1-106-184-00 | MYLAR | 0.0033MF | 5% | 50V |
| C018 | 1-163-017-00 | CERAMIC CHIP | 0.0047MF | 10% | 50V |
| C019 | 1-106-184-00 | MYLAR | 0.0033MF | 5% | 50V |
| C020 | 1-123-356-00 | ELECT | 10MF | 20% | 16V |
| C021 | 1-123-306-00 | ELECT | 47MF | 20% | 10V |
| C022 | 1-123-306-00 | ELECT | 47MF | 20% | 10V |
| C023 | 1-163-021-00 | CERAMIC CHIP | 0.01MF | | 50V |
| C024 | 1-163-021-00 | CERAMIC CHIP | 0.01MF | | 50V |
| C025 | 1-123-356-00 | ELECT | 10MF | 20% | 16V |
| C026 | 1-163-021-00 | CERAMIC CHIP | 0.01MF | | 50V |
| C027 | 1-123-332-00 | ELECT | 47MF | 20% | 16V |
| C028 | 1-123-379-00 | ELECT | 0.47MF | 20% | 50V |
| C029 | 1-106-184-00 | MYLAR | 0.0033MF | 5% | 50V |
| C030 | 1-106-184-00 | MYLAR | 0.0033MF | 5% | 50V |
| C031 | 1-163-103-00 | CERAMIC CHIP | 27PF | 5% | 50V |
| C032 | 1-123-380-00 | ELECT | 1MF | 20% | 50V |
| C033 | 1-136-169-00 | FILM | 0.22MF | 5% | 50V (AEP MODEL) |
| C034 | 1-123-380-00 | ELECT | 1MF | 20% | 50V (AEP MODEL) |
| C035 | 1-106-367-00 | MYLAR | 0.01MF | 10% | 100V(AEP MODEL) |
| C036 | 1-103-741-00 | POLYSTYRENE | 0.0047MF | 5% | 50V (AEP MODEL) |
| C037 | 1-136-169-00 | FILM | 0.22MF | 5% | 50V (AEP MODEL) |
| C038 | 1-163-109-00 | CERAMIC CHIP | 47PF | 5% | 50V (AEP MODEL) |
| C039 | 1-163-125-00 | CERAMIC CHIP | 220PF | 5% | 50V (AEP MODEL) |
| C040 | 1-123-356-00 | ELECT | 10MF | 20% | 16V (AEP MODEL) |
| C041 | 1-163-021-00 | CERAMIC CHIP | 0.01MF | | 50V |

CONNECTOR

| | | |
|---|---|---|
| CJ001 | 1-566-285-11 | CONNECTOR, BOARD TO BOARD 6P |
| CJ002 | 1-566-287-11 | CONNECTOR, BOARD TO BOARD 10P |

DIODE

| | | |
|---|---|---|
| D001 | 8-719-101-23 | DIODE 1SS123 |
| D002 | 8-719-100-03 | DIODE 1S2835 |

IC

| | | |
|---|---|---|
| IC001 | 8-759-602-16 | IC M54572L |
| IC002 | 8-759-007-54 | IC TDA4940 |
| IC003 | 8-759-907-45 | IC TDA2595 (AEP MODEL) |

IF

| | | |
|---|---|---|
| IFB001 | 1-464-697-11 | IF BLOCK (IFS-389) |
| CD1 | 1-404-501-00 | DISCRIMINATOR, CERAMIC |

COIL

| | | |
|---|---|---|
| L001 | 1-408-429-00 | MICRO INDUCTOR 470UH |
| L002 | 1-408-428-00 | MICRO INDUCTOR 390UH |
| L003 | 1-408-422-00 | MICRO INDUCTOR 120UH |

TRANSISTOR

| | | |
|---|---|---|
| Q001 | 8-729-100-67 | TRANSISTOR 2SC1623-L7 |
| Q002 | 8-729-100-76 | TRANSISTOR 2SA812 |
| Q003 | 8-729-100-76 | TRANSISTOR 2SA812 |
| Q004 | 8-729-100-67 | TRANSISTOR 2SC1623-L7 |
| Q005 | 8-729-901-01 | TRANSISTOR DTC144EK |
| Q006 | 8-729-901-01 | TRANSISTOR DTC144EK |
| Q007 | 8-729-901-01 | TRANSISTOR DTC144EK |

RESISTOR

| | | | | | |
|---|---|---|---|---|---|
| R001 | 1-216-081-00 | METAL CHIP | 22K | 5% | 1/10W |

When indicating parts by reference number, please include the board name.

| Ref.No | Part No. | Description | | | | Remark |
|---|---|---|---|---|---|---|
| R002 | 1-216-109-00 | METAL CHIP | 330K | 5% | 1/10W | |
| R003 | 1-216-061-00 | METAL CHIP | 3.3K | 5% | 1/10W | |
| R004 | 1-216-057-00 | METAL CHIP | 2.2K | 5% | 1/10W | |
| R005 | 1-216-057-00 | METAL CHIP | 2.2K | 5% | 1/10W | |
| R007 | 1-216-037-00 | METAL CHIP | 330 | 5% | 1/10W | |
| R008 | 1-216-039-00 | METAL CHIP | 390 | 5% | 1/10W | |
| R009 | 1-216-045-00 | METAL CHIP | 680 | 5% | 1/10W | |
| R010 | 1-216-063-00 | METAL CHIP | 3.9K | 5% | 1/10W | |
| R011 | 1-216-087-00 | METAL CHIP | 39K | 5% | 1/10W | |
| R012 | 1-216-095-00 | METAL CHIP | 82K | 5% | 1/10W | |
| R013 | 1-216-077-00 | METAL CHIP | 15K | 5% | 1/10W | |
| R014 | 1-216-097-00 | METAL CHIP | 100K | 5% | 1/10W | |
| R015 | 1-216-097-00 | METAL CHIP | 100K | 5% | 1/10W | |
| R016 | 1-216-057-00 | METAL CHIP | 2.2K | 5% | 1/10W | |
| R017 | 1-216-077-00 | METAL CHIP | 15K | 5% | 1/10W | (AEP MODEL) |
| R018 | 1-216-049-00 | METAL CHIP | 1K | 5% | 1/10W | |
| R019 | 1-216-049-00 | METAL CHIP | 1K | 5% | 1/10W | |
| R020 | 1-216-057-00 | METAL CHIP | 2.2K | 5% | 1/10W | |
| R021 | 1-216-063-00 | METAL CHIP | 3.9K | 5% | 1/10W | (AEP MODEL) |
| R022 | 1-216-097-00 | METAL CHIP | 100K | 5% | 1/10W | (AEP MODEL) |
| R023 | 1-216-097-00 | METAL CHIP | 100K | 5% | 1/10W | (AEP MODEL) |
| R024 | 1-216-075-00 | METAL CHIP | 12K | 5% | 1/10W | (AEP MODEL) |
| R025 | 1-216-089-00 | METAL CHIP | 47K | 5% | 1/10W | (AEP MODEL) |
| R026 | 1-216-067-00 | METAL CHIP | 5.6K | 5% | 1/10W | (AEP MODEL) |
| R027 | 1-216-067-00 | METAL CHIP | 5.6K | 5% | 1/10W | (AEP MODEL) |
| R028 | 1-216-025-00 | METAL CHIP | 100K | 5% | 1/10W | (AEP MODEL) |
| R029 | 1-216-295-00 | METAL CHIP | 0 | 5% | 1/10W | |

VARIABLE RESISTOR

| | | | |
|---|---|---|---|
| RV001 | 1-228-996-00 | RES, ADJ, CARBON 47K | (AEP MODEL) |

TUNER

| | | | |
|---|---|---|---|
| TU001⚠ | 1-463-761-11 | TUNER, ET (BT-883B) | |

**********

*A-7060-474-A PR-13 BOARD, COMPLETE (WG MODEL)
**********

*A-7060-609-A PR-13 BOARD, COMPLETE (AEP MODEL)
**********

CONNECTOR

| | | |
|---|---|---|
| CN001 | *1-564-012-00 | PIN, CONNECTOR 2P (WG MODEL) |
| CN002 | *1-564-018-11 | PIN, CONNECTOR 8P |

DIODE

| | | |
|---|---|---|
| D002 | 8-719-911-19 | DIODE 1SS119 |
| D003 | 8-719-911-19 | DIODE 1SS119 |
| D004 | 8-719-911-19 | DIODE 1SS119 |

SWITCH

| | | |
|---|---|---|
| S001 | 1-553-716-00 | SWITCH, SLIDE |
| S002 | 1-553-716-00 | SWITCH, SLIDE |
| S003 | 1-553-716-00 | SWITCH, SLIDE (WG MODEL) |
| S004 | 1-554-174-00 | SWITCH, KEY BOARD |
| S005 | 1-554-174-00 | SWITCH, KEY BOARD |
| S006 | 1-553-716-00 | SWITCH, SLIDE |
| S007 | 1-553-716-00 | SWITCH, SLIDE |
| S008 | 1-554-174-00 | SWITCH, KEY BOARD |
| S009 | 1-554-174-00 | SWITCH, KEY BOARD |
| S010 | 1-554-174-00 | SWITCH, KEY BOARD |
| S011 | 1-554-174-00 | SWITCH, KEY BOARD |
| S013 | 1-554-174-00 | SWITCH, KEY BOARD |

**********

*A-7060-475-A VP-1 BOARD, COMPLETE (WG MODEL)
**********

CAPACITOR

| | | | | |
|---|---|---|---|---|
| C001 | 1-163-097-00 | CERAMIC CHIP 15PF | 5% | 50V |
| C002 | 1-163-141-00 | CERAMIC CHIP 0.001MF | 5% | 50V |
| C003 | 1-163-133-00 | CERAMIC CHIP 470PF | 5% | 50V |
| C004 | 1-163-033-00 | CERAMIC CHIP 0.022MF | 10% | 25V |
| C005 | 1-163-127-00 | CERAMIC CHIP 270PF | 5% | 50V |
| C006 | 1-163-117-00 | CERAMIC CHIP 100PF | 5% | 50V |
| C007 | 1-163-097-00 | CERAMIC CHIP 15PF | 5% | 50V |
| C008 | 1-124-245-00 | ELECT 4.7MF | 20% | 16V |
| C009 | 1-163-115-00 | CERAMIC CHIP 82PF | 5% | 50V |
| C010 | 1-163-033-00 | CERAMIC CHIP 0.022MF | 10% | 25V |
| C011 | 1-124-234-00 | ELECT 22MF | 20% | 16V |
| C012 | 1-163-021-00 | CERAMIC CHIP 0.01MF | 10% | 50V |
| C013 | 1-163-833-00 | CERAMIC CHIP 0.068MF | | 25V |
| C014 | 1-163-033-00 | CERAMIC CHIP 0.022MF | 10% | 25V |
| C015 | 1-124-245-00 | ELECT 4.7MF | 20% | 16V |
| C016 | 1-163-105-00 | CERAMIC CHIP 33PF | 5% | 50V |
| C017 | 1-163-105-00 | CERAMIC CHIP 33PF | 5% | 50V |
| C018 | 1-163-033-00 | CERAMIC CHIP 0.022MF | 10% | 25V |

CONNECTOR

| | | |
|---|---|---|
| CN001 | *1-564-018-11 | PIN, CONNECTOR 8P |
| CN002 | *1-564-014-00 | PIN, CONNECTOR 4P |

IC

| | | |
|---|---|---|
| IC001 | 8-759-929-51 | IC SAA5235 |
| IC002 | 8-759-103-25 | IC UPD4053BG |
| IC003 | 8-759-929-52 | IC SAF1135P |
| IC004 | 8-759-111-94 | IC UPD7508HC-090 |

COIL

| | | |
|---|---|---|
| L001 | 1-408-970-21 | MICRO INDUCTOR 10UH |

TRANSISTOR

| | | |
|---|---|---|
| Q001 | 8-729-901-01 | TRANSISTOR DTC144EK |

The components identified by shading and mark ⚠ are critical for safety. Replace only with part number specified.

When indicating parts by reference number, please include the board name.

| Ref.No | Part No. | Description | | | | Remark |
|---|---|---|---|---|---|---|
| | | **RESISTOR** | | | | |
| R001 | 1-216-025-00 | METAL CHIP | 100 | 5% | 1/10W | |
| R002 | 1-216-085-00 | METAL CHIP | 33K | 5% | 1/10W | |
| R003 | 1-216-097-00 | METAL CHIP | 100K | 5% | 1/10W | |
| R004 | 1-216-097-00 | METAL CHIP | 100K | 5% | 1/10W | |
| R101 | 1-216-295-00 | METAL CHIP | 0 | 5% | 1/10W | |
| R102 | 1-216-295-00 | METAL CHIP | 0 | 5% | 1/10W | |
| R103 | 1-216-295-00 | METAL CHIP | 0 | 5% | 1/10W | |
| | | **CRYSTAL** | | | | |
| X001 | 1-527-317-00 | OSCILLATOR, CRYSTAL (10MHz) | | | | |
| X002 | 1-567-160-21 | OSCILLATOR, CERAMIC (4.19MHz) | | | | |
| ********** | | | | | | |
| | *A-7060-482-A | TS-50 BOARD, COMPLETE (WG MODEL) | | | | |
| | | ********** | | | | |
| | *A-7060-608-A | TS-50 BOARD, COMPLETE (AEP MODEL) | | | | |
| | | ********** | | | | |
| | | **CAPACITOR** | | | | |
| C101 | 1-123-307-00 | ELECT | 100MF | 20% | 10V | |
| C102 | 1-163-117-00 | CERAMIC CHIP | 100PF | 5% | 50V | |
| C103 | 1-123-369-00 | ELECT | 4.7MF | 20% | 25V | |
| C104 | 1-163-109-00 | CERAMIC CHIP | 47PF | 5% | 50V | |
| C105 | 1-163-109-00 | CERAMIC CHIP | 47PF | 5% | 50V | |
| C106 | 1-123-822-00 | ELECT | 47MF | 20% | 10V | |
| C107 | 1-163-019-00 | CERAMIC CHIP | 0.0068MF | 10% | 50V | |
| C108 | 1-123-356-00 | ELECT | 10MF | 20% | 16V | |
| C109 | 1-123-318-00 | ELECT | 33MF | 20% | 16V | |
| C110 | 1-123-379-00 | ELECT | 0.47MF | 20% | 50V | |
| C111 | 1-123-369-00 | ELECT | 4.7MF | 20% | 25V | |
| C112 | 1-123-356-00 | ELECT | 10MF 20% | | 16V | (WG MODEL) |
| C113 | 1-163-021-00 | CERAMIC CHIP | 0.01MF | | 50V | |
| C114 | 1-130-483-00 | MYLAR | 0.01MF | 5% | 50V | |
| C115 | 1-123-816-00 | ELECT | 10MF | 20% | 50V | |
| C116 | 1-130-483-00 | MYLAR | 0.01MF | 5% | 50V | |
| C117 | 1-123-369-00 | ELECT | 4.7MF | 20% | 25V | |
| C118 | 1-123-369-00 | ELECT | 4.7MF | 20% | 25V | |
| C119 | 1-130-483-00 | MYLAR | 0.01MF | 5% | 50V | |
| C120 | 1-123-379-00 | ELECT | 0.47MF | 20% | 50V | |
| C121 | 1-163-117-00 | CERAMIC CHIP | 100PF | 5% | 50V | |
| C122 | 1-130-495-00 | MYLAR | 0.1MF | 5% | 50V | |
| C124 | 1-163-818-00 | CERAMIC CHIP | 0.1MF 10% | | 50V | (WG MODEL) |
| C125 | 1-163-141-00 | CERAMIC CHIP | 0.001MF 10% | | 50V | (WG MODEL) |
| C126 | 1-163-021-00 | CERAMIC CHIP | 0.01MF | | 50V | |
| C127 | 1-123-332-00 | ELECT | 47MF | 20% | 16V | |
| C128 | 1-163-021-00 | CERAMIC CHIP | 0.01MF | | 50V | |
| | | **CONNECTOR** | | | | |
| CJ101 | 1-563-717-11 | CONNECTOR, BOARD TO BOARD 6P | | | | |
| CJ102 | 1-563-719-11 | CONNECTOR, BOARD TO BOARD 10P | | | | |

| Ref.No | Part No. | Description | Remark |
|---|---|---|---|
| | | **CONNECTOR** | |
| CN101 | *1-560-891-00 | PIN, CONNECTOR 3P | |
| CN102 | *1-560-893-00 | PIN, CONNECTOR 5P | |
| CN103 | *1-560-892-00 | PIN, CONNECTOR 4P | |
| CN104 | *1-560-893-00 | PIN, CONNECTOR 5P | |
| CN105 | *1-564-033-00 | PIN, CONNECTOR 8P | |
| CN106 | *1-560-892-00 | PIN, CONNECTOR 4P (WG MODEL) | |
| | | **DIODE** | |
| D101 | 8-719-100-03 | DIODE 1S2835 | |
| | | **IC** | |
| IC101 | 8-759-604-20 | IC M50434-019SP | |
| IC102 | 8-759-603-41 | IC M58655P | |
| IC103 | 8-759-007-55 | IC TDA4944 | |
| IC104 | 8-759-157-40 | IC UPC574J | |
| | | **COIL** | |
| L101 | 1-408-408-00 | MICRO INDUCTOR 8.2UH | |
| | | **IC LINK** | |
| PS101⚠ | 1-532-637-00 | LINK, IC (ICP-N25) | |
| | | **TRANSISTOR** | |
| Q101 | 8-729-100-67 | TRANSISTOR 2SC1623-L7 | |
| Q102 | 8-729-100-67 | TRANSISTOR 2SC1623-L7 | |
| Q103 | 8-729-100-67 | TRANSISTOR 2SC1623-L7 | |
| Q104 | 8-729-100-67 | TRANSISTOR 2SC1623-L7 | |
| Q105 | 8-729-100-67 | TRANSISTOR 2SC1623-L7 | |
| Q106 | 8-729-100-67 | TRANSISTOR 2SC1623-L7 | |
| Q107 | 8-729-100-76 | TRANSISTOR 2SA812 (WG MODEL) | |
| Q108 | 8-729-901-01 | TRANSISTOR DTC144EK | |
| | | **RESISTOR** | |
| R101 | 1-216-049-00 | METAL CHIP 1K 5% 1/10W | |
| R102 | 1-216-045-00 | METAL CHIP 680 5% 1/10W | |
| R103 | 1-216-055-00 | METAL CHIP 1.8K 5% 1/10W | (AEP MODEL) |
| R103 | 1-216-295-00 | METAL CHIP 0 5% 1/10W | (WG MODEL) |
| R104 | 1-216-061-00 | METAL CHIP 3.3K 5% 1/10W | |
| R105 | 1-216-057-00 | METAL CHIP 2.2K 5% 1/10W | |
| R106 | 1-216-057-00 | METAL CHIP 2.2K 5% 1/10W | |
| R107 | 1-216-061-00 | METAL CHIP 3.3K 5% 1/10W | |
| R108 | 1-216-073-00 | METAL CHIP 10K 5% 1/10W | |
| R109 | 1-216-057-00 | METAL CHIP 2.2K 5% 1/10W | |
| R111 | 1-216-065-00 | METAL CHIP 4.7K 5% 1/10W | |
| R112 | 1-216-061-00 | METAL CHIP 3.3K 5% 1/10W | |
| R113 | 1-216-073-00 | METAL CHIP 10K 5% 1/10W | |
| R114 | 1-216-073-00 | METAL CHIP 10K 5% 1/10W | |
| R115 | 1-216-077-00 | METAL CHIP 15K 5% 1/10W | |
| R116 | 1-216-045-00 | METAL CHIP 680 5% 1/10W | |
| R117 | 1-216-081-00 | METAL CHIP 22K 5% 1/10W | |

The components identified by shading and mark ⚠ are critical for safety. Replace only with part number specified.

T

When indicating parts by reference number, please include the board name.

| Ref.No | Part No. | Description | | | | Remark |
|---|---|---|---|---|---|---|
| R118 | 1-216-081-00 | METAL CHIP | 22K | 5% | 1/10W | |
| R119 | 1-247-713-11 | CARBON | 1K | 5% | 1/4W F | |
| R120 | 1-216-081-00 | METAL CHIP | 22K | 5% | 1/10W | |
| R121 | 1-216-081-00 | METAL CHIP | 22K | 5% | 1/10W | |
| R122 | 1-216-091-00 | METAL CHIP | 56K | 5% | 1/10W | |
| R123 | 1-216-093-00 | METAL CHIP | 68K | 5% | 1/10W | |
| R124 | 1-216-073-00 | METAL CHIP | 10K | 5% | 1/10W | |
| R125 | 1-216-073-00 | METAL CHIP | 10K | 5% | 1/10W | |
| R126 | 1-216-073-00 | METAL CHIP | 10K | 5% | 1/10W | |
| R127 | 1-216-073-00 | METAL CHIP | 10K | 5% | 1/10W | |
| R128 | 1-216-055-00 | METAL CHIP | 1.8K | 5% | 1/10W | |
| R129 | 1-216-047-00 | METAL CHIP | 820 | 5% | 1/10W | |
| R130 | 1-216-073-00 | METAL CHIP | 10K | 5% | 1/10W | |
| R131 | 1-216-073-00 | METAL CHIP | 10K | 5% | 1/10W | |
| R132 | 1-216-065-00 | METAL CHIP | 4.7K | 5% | 1/10W | |
| R133 | 1-216-065-00 | METAL CHIP | 4.7K | 5% | 1/10W | |
| R134 | 1-216-067-00 | METAL CHIP | 5.6K | 5% | 1/10W | |
| R135 | 1-216-045-00 | METAL CHIP | 680 | 5% | 1/10W | |
| R136 | 1-216-065-00 | METAL CHIP | 4.7K | 5% | 1/10W | |
| R137 | 1-216-065-00 | METAL CHIP | 4.7K | 5% | 1/10W | |
| R138 | 1-216-067-00 | METAL CHIP | 5.6K | 5% | 1/10W | |
| R139 | 1-216-045-00 | METAL CHIP | 680 | 5% | 1/10W | |
| R140 | 1-216-049-00 | METAL CHIP | 1K | 5% | 1/10W | (WG MODEL) |
| R141 | 1-216-109-00 | METAL CHIP | 330K | 5% | 1/10W | (WG MODEL) |
| R142 | 1-216-121-00 | METAL CHIP | 1M | 5% | 1/10W | (WG MODEL) |
| R143 | 1-216-081-00 | METAL CHIP | 22K | 5% | 1/10W | (WG MODEL) |
| R144 | 1-216-033-00 | METAL CHIP | 220 | 5% | 1/10W | |

VARIABLE RESISTOR

| | | | |
|---|---|---|---|
| RV101 | 1-228-996-00 | RES, ADJ, CARBON 47K | |

CRYSTAL

| | | | |
|---|---|---|---|
| X101 | 1-567-121-00 | VIBRATOR, CRYSTAL (4.19MHz) | |

**********

*1-621-987-11 CB-8 BOARD
**********

CONNECTOR

| | | | |
|---|---|---|---|
| CN001 | *1-564-005-00 | PIN, CONNECTOR 6P | |
| CN002 | *1-564-006-11 | PIN, CONNECTOR 7P | |

DIODE

| | | | |
|---|---|---|---|
| D001 | 8-719-106-22 | DIODE RD7.5M-B1 | |
| D002 | 8-719-106-22 | DIODE RD7.5M-B1 | |
| D003 | 8-719-106-22 | DIODE RD7.5M-B1 | |
| D004 | 8-719-106-22 | DIODE RD7.5M-B1 | |
| D005 | 8-719-106-22 | DIODE RD7.5M-B1 | |
| D006 | 8-719-106-22 | DIODE RD7.5M-B1 | |

RESISTOR

| | | | | | | |
|---|---|---|---|---|---|---|
| R001 | 1-216-037-00 | METAL CHIP | 330 | 5% | 1/10W | |
| R002 | 1-216-037-00 | METAL CHIP | 330 | 5% | 1/10W | |
| R003 | 1-216-037-00 | METAL CHIP | 330 | 5% | 1/10W | |
| R004 | 1-216-037-00 | METAL CHIP | 330 | 5% | 1/10W | |
| R005 | 1-216-037-00 | METAL CHIP | 330 | 5% | 1/10W | |
| R006 | 1-216-037-00 | METAL CHIP | 330 | 5% | 1/10W | |

**********

*1-621-985-11 FR-24 BOARD
**********

*3-689-521-01 HOLDER, LED, ROUND

DIODE

| | | | |
|---|---|---|---|
| D001 | 8-719-812-32 | DIODE TLY123 | |
| D002 | 8-719-812-33 | DIODE TLG123A | |
| D003 | 8-719-812-33 | DIODE TLG123A | |

**********

*1-622-006-11 DS-16 BOARD
**********

⚠*1-533-189-11 HOLDER, FUSE
⚠2-430-344-01 COVER (CC-1017), INSULATING

CAPACITOR

| | | | | | |
|---|---|---|---|---|---|
| C401 | ⚠1-136-472-13 | FILM | 0.1MF | 20% | 250V |
| C402 | ⚠1-161-742-00 | CERAMIC | 0.0022MF | 20% | 400V |
| C403 | ⚠1-161-742-00 | CERAMIC | 0.0022MF | 20% | 400V |
| C404 | ⚠1-161-742-00 | CERAMIC | 0.0022MF | 20% | 400V |
| C405 | ⚠1-161-742-00 | CERAMIC | 0.0022MF | 20% | 400V |

CONNECTOR

| | | | |
|---|---|---|---|
| CN401 | *1-560-891-00 | PIN, CONNECTOR 3P | |

FUSE

| | | | |
|---|---|---|---|
| F401 | ⚠1-532-279-00 | FUSE, TIME-LAG (T500mA 250V) | |

TRANSFORMER

| | | | |
|---|---|---|---|
| T402 | ⚠1-421-357-31 | TRANSFORMER, LINE FILTER | |

**********

*A-7060-585-A DR-35 BOARD, COMPLETE
**********

7-685-646-79 SCREW +BVTP 3X8 TYPE2 IT-3

CAPACITOR

| | | | | | |
|---|---|---|---|---|---|
| C201 | 1-124-255-00 | ELECT | 1MF | 20% | 50V |
| C202 | 1-163-141-00 | CERAMIC CHIP | 0.001MF | 5% | 50V |
| C203 | 1-163-038-00 | CERAMIC CHIP | 0.1MF | | 25V |
| C204 | 1-163-038-00 | CERAMIC CHIP | 0.1MF | | 25V |
| C205 | 1-123-874-00 | ELECT | 470MF | 20% | 16V |
| C207 | 1-124-124-00 | ELECT | 220MF | 20% | 6.3V |

The components identified by shading and mark ⚠ are critical for safety. Replace only with part number specified.

When indicating parts by reference number, please include the board name.

| Ref.No | Part No. | Description | | | Remark |
|---|---|---|---|---|---|
| C208 | 1-163-038-00 | CERAMIC CHIP 0.1MF | | | 25V |
| C209 | 1-124-124-00 | ELECT | 220MF | 20% | 6.3V |
| C210 | 1-163-038-00 | CERAMIC CHIP 0.1MF | | | 25V |
| C211 | 1-163-141-00 | CERAMIC CHIP 0.001MF | | 5% | 50V |
| C212 | 1-124-255-00 | ELECT | 1MF | 20% | 50V |
| C213 | 1-163-038-00 | CERAMIC CHIP 0.1MF | | | 25V |
| C214 | 1-123-874-00 | ELECT | 470MF | 20% | 16V |
| C216 | 1-123-333-00 | ELECT | 100MF | 20% | 16V |
| C217 | 1-163-038-00 | CERAMIC CHIP 0.1MF | | | 25V |
| C218 | 1-163-141-00 | CERAMIC CHIP 0.001MF | | 5% | 50V |
| C219 | 1-163-139-00 | CERAMIC CHIP 820PF | | 5% | 50V |
| C220 | 1-163-038-00 | CERAMIC CHIP 0.1MF | | | 25V |
| C221 | 1-163-038-00 | CERAMIC CHIP 0.1MF | | | 25V |
| C223 | 1-123-333-00 | ELECT | 100MF | 20% | 16V |
| C224 | 1-163-038-00 | CERAMIC CHIP 0.1MF | | | 25V |
| C225 | 1-123-874-00 | ELECT | 470MF | 20% | 16V |
| C226 | 1-163-038-00 | CERAMIC CHIP 0.1MF | | | 25V |
| C227 | 1-123-336-00 | ELECT | 470MF | 20% | 25V |
| C228 | 1-163-038-00 | CERAMIC CHIP 0.1MF | | | 25V |
| C229 | 1-163-038-00 | CERAMIC CHIP 0.1MF | | | 25V |
| C230 | 1-163-038-00 | CERAMIC CHIP 0.1MF | | | 25V |
| C231 | 1-123-299-00 | ELECT | 1000MF | 20% | 6.3V |
| C232 | 1-123-299-00 | ELECT | 1000MF | 20% | 6.3V |
| C233 | 1-123-323-00 | ELECT | 470MF | 20% | 16V |
| C235 | 1-163-038-00 | CERAMIC CHIP 0.1MF | | | 25V |
| C240 | 1-124-123-00 | ELECT | 100MF | 20% | 6.3V |
| C241 | 1-123-296-00 | ELECT | 220MF | 20% | 6.3V |

CONNECTOR

| | | |
|---|---|---|
| CN201 | *1-560-892-00 | PIN, CONNECTOR 4P |
| CN202 | *1-560-895-00 | PIN, CONNECTOR 7P |
| CN203 | *1-560-894-00 | PIN, CONNECTOR 6P |
| CN204 | *1-560-890-00 | PIN, CONNECTOR 2P |

DIODE

| | | |
|---|---|---|
| D201 | 8-719-200-00 | DIODE 31DQ05 |
| D202 | 8-719-200-00 | DIODE 31DQ05 |
| D203 | 8-719-200-00 | DIODE 31DQ05 |
| D204 | 8-719-100-03 | DIODE 1S2835 |
| D205 | ⚠8-719-110-02 | DIODE RD7.5ESB1 |

IC

| | | |
|---|---|---|
| IC201 | 8-759-908-95 | IC TL1451CNS |
| IC202 | 8-759-908-95 | IC TL1451CNS |

JUMPER RESISTOR

| | | | | | |
|---|---|---|---|---|---|
| JR001 | 1-216-296-00 | METAL CHIP | 0 | 5% | 1/8W |
| JR002 | 1-216-296-00 | METAL CHIP | 0 | 5% | 1/8W |
| JR003 | 1-216-296-00 | METAL CHIP | 0 | 5% | 1/8W |
| JR004 | 1-216-296-00 | METAL CHIP | 0 | 5% | 1/8W |
| JR005 | 1-216-296-00 | METAL CHIP | 0 | 5% | 1/8W |
| JR006 | 1-216-296-00 | METAL CHIP | 0 | 5% | 1/8W |
| JR007 | 1-216-296-00 | METAL CHIP | 0 | 5% | 1/8W |
| JR008 | 1-216-296-00 | METAL CHIP | 0 | 5% | 1/8W |
| JR009 | 1-216-296-00 | METAL CHIP | 0 | 5% | 1/8W |
| JR010 | 1-216-296-00 | METAL CHIP | 0 | 5% | 1/8W |
| JR011 | 1-216-296-00 | METAL CHIP | 0 | 5% | 1/8W |
| JR012 | 1-216-296-00 | METAL CHIP | 0 | 5% | 1/8W |
| JR013 | 1-216-296-00 | METAL CHIP | 0 | 5% | 1/8W |
| JR014 | 1-216-296-00 | METAL CHIP | 0 | 5% | 1/8W |
| JR015 | 1-216-296-00 | METAL CHIP | 0 | 5% | 1/8W |
| JR016 | 1-216-296-00 | METAL CHIP | 0 | 5% | 1/8W |
| JR017 | 1-216-296-00 | METAL CHIP | 0 | 5% | 1/8W |
| JR018 | 1-216-296-00 | METAL CHIP | 0 | 5% | 1/8W |
| JR019 | 1-216-296-00 | METAL CHIP | 0 | 5% | 1/8W |
| JR020 | 1-216-296-00 | METAL CHIP | 0 | 5% | 1/8W |
| JR021 | 1-216-296-00 | METAL CHIP | 0 | 5% | 1/8W |
| JR022 | 1-216-295-00 | METAL CHIP | 0 | 5% | 1/10W |
| JR023 | 1-216-295-00 | METAL CHIP | 0 | 5% | 1/10W |
| JR024 | 1-216-295-00 | METAL CHIP | 0 | 5% | 1/10W |
| JR025 | 1-216-295-00 | METAL CHIP | 0 | 5% | 1/10W |
| JR026 | 1-216-295-00 | METAL CHIP | 0 | 5% | 1/10W |
| JR027 | 1-216-295-00 | METAL CHIP | 0 | 5% | 1/10W |
| JR028 | 1-216-295-00 | METAL CHIP | 0 | 5% | 1/10W |
| JR029 | 1-216-295-00 | METAL CHIP | 0 | 5% | 1/10W |
| JR030 | 1-216-295-00 | METAL CHIP | 0 | 5% | 1/10W |

COIL

| | | |
|---|---|---|
| L201 | 1-408-945-00 | COIL, CHOKE 200UH |
| L202 | 1-408-944-00 | COIL, CHOKE 20UH |
| L203 | 1-408-944-00 | COIL, CHOKE 20UH |
| L205 | 1-408-944-00 | COIL, CHOKE 20UH |
| L206 | 1-408-945-00 | COIL, CHOKE 200UH |
| L207 | 1-408-944-00 | COIL, CHOKE 20UH |
| L208 | 1-408-944-00 | COIL, CHOKE 20UH |
| L209 | 1-408-944-00 | COIL, CHOKE 20UH |
| L210 | 1-408-944-00 | COIL, CHOKE 20UH |
| L211 | 1-408-944-00 | COIL, CHOKE 20UH |
| L264 | 1-408-945-00 | COIL, CHOKE 200UH |

IC LINK

| | | |
|---|---|---|
| PS202⚠ | 1-532-679-21 | LINK, IC (ICP-F15) |

TRANSISTOR

| | | |
|---|---|---|
| Q201 | 8-729-112-61 | TRANSISTOR 2SA1441-L |
| Q202 | 8-729-100-66 | TRANSISTOR 2SC1623 |
| Q203 | 8-729-100-76 | TRANSISTOR 2SA812 |
| Q204 | 8-729-113-33 | TRANSISTOR 2SB733-4 |
| Q205 | 8-729-112-61 | TRANSISTOR 2SA1441-L |
| Q206 | 8-729-100-66 | TRANSISTOR 2SC1623 |
| Q207 | 8-729-100-76 | TRANSISTOR 2SA812 |
| Q208 | 8-729-901-01 | TRANSISTOR DTC144EK |
| Q209 | 8-729-112-61 | TRANSISTOR 2SA1441-L |
| Q210 | 8-729-100-66 | TRANSISTOR 2SC1623 |
| Q211 | 8-729-100-76 | TRANSISTOR 2SA812 |

The components identified by shading and mark ⚠ are critical for safety. Replace only with part number specified.

When indicating parts by reference number, please include the board name.

| Ref.No | Part No. | Description | | | | Remark |
|---|---|---|---|---|---|---|
| Q212 | 8-729-901-01 | TRANSISTOR DTC144EK | | | | |
| Q213 | 8-729-901-01 | TRANSISTOR DTC144EK | | | | |
| Q214 | 8-729-901-01 | TRANSISTOR DTC144EK | | | | |
| | | RESISTOR | | | | |
| R201 | 1-216-085-00 | METAL CHIP | 33K | 5% | 1/10W | |
| R202 | 1-216-085-00 | METAL CHIP | 33K | 5% | 1/10W | |
| R203 | 1-216-115-00 | METAL CHIP | 560K | 5% | 1/10W | |
| R204 | 1-249-413-11 | CARBON | 470 | 5% | 1/6W | |
| R205 | 1-216-055-00 | METAL CHIP | 1.8K | 5% | 1/10W | |
| R206 | 1-216-055-00 | METAL CHIP | 1.8K | 5% | 1/10W | |
| R207 | 1-216-051-00 | METAL CHIP | 1.2K | 5% | 1/10W | |
| R208 | 1-216-095-00 | METAL CHIP | 82K | 5% | 1/10W | |
| R210 | 1-216-065-00 | METAL CHIP | 4.7K | 5% | 1/10W | |
| R211 | 1-216-033-00 | METAL CHIP | 220 | 5% | 1/10W | |
| R212 | 1-216-687-11 | METAL CHIP | 33K | 0.50% | 1/16W | |
| R213 | 1-216-687-11 | METAL CHIP | 33K | 0.50% | 1/16W | |
| R214 | 1-216-115-00 | METAL CHIP | 560K | 5% | 1/10W | |
| R215 | 1-249-413-11 | CARBON | 470 | 5% | 1/6W | |
| R216 | 1-216-055-00 | METAL CHIP | 1.8K | 5% | 1/10W | |
| R217 | 1-216-055-00 | METAL CHIP | 1.8K | 5% | 1/10W | |
| R218 | 1-216-051-00 | METAL CHIP | 1.2K | 5% | 1/10W | |
| R219 | 1-216-699-11 | METAL CHIP | 100K | 0.50% | 1/16W | |
| R220 | 1-216-679-11 | METAL CHIP | 15K | 0.50% | 1/16W | |
| R221 | 1-216-085-00 | METAL CHIP | 33K | 5% | 1/10W | |
| R222 | 1-216-085-00 | METAL CHIP | 33K | 5% | 1/10W | |
| R223 | 1-216-067-00 | METAL CHIP | 5.6K | 5% | 1/10W | |
| R224 | 1-216-115-00 | METAL CHIP | 560K | 5% | 1/10W | |
| R225 | 1-216-055-00 | METAL CHIP | 1.8K | 5% | 1/10W | |
| R226 | 1-216-055-00 | METAL CHIP | 1.8K | 5% | 1/10W | |
| R227 | 1-216-065-00 | METAL CHIP | 4.7K | 5% | 1/10W | |
| R228 | 1-216-099-00 | METAL CHIP | 120K | 5% | 1/10W | |
| R229 | 1-216-075-00 | METAL CHIP | 12K | 5% | 1/10W | |
| R230 | 1-216-081-00 | METAL CHIP | 22K | 5% | 1/10W | |
| R232 | 1-216-055-00 | METAL CHIP | 1.8K | 5% | 1/10W | |
| R233 | 1-216-091-00 | METAL CHIP | 56K | 5% | 1/10W | |
| | | VARIABLE RESISTOR | | | | |
| RV201 | 1-230-523-11 | RES, ADJ, METAL GLAZE 10K | | | | |
| RV202 | 1-230-523-11 | RES, ADJ, METAL GLAZE 10K | | | | |
| RV203 | 1-230-522-11 | RES, ADJ, METAL GLAZE 4.7K | | | | |

**********

*A-7068-031-A TC-3 BOARD, COMPLETE (WG MODEL)
**********

| | | | | | |
|---|---|---|---|---|---|
| | | CAPACITOR | | | |
| C001 | 1-124-236-00 | ELECT | 47MF | 20% | 16V |
| C002 | 1-163-075-00 | CERAMIC CHIP | 0.047MF | | 50V |
| C003 | 1-163-123-00 | CERAMIC CHIP | 180PF | 5% | 50V |
| C004 | 1-163-075-00 | CERAMIC CHIP | 0.047MF | | 50V |
| C005 | 1-163-117-00 | CERAMIC CHIP | 100PF | 5% | 50V |
| C006 | 1-163-019-00 | CERAMIC CHIP | 0.0068MF | 10% | 50V |
| C007 | 1-130-026-00 | FILM | 0.0047MF | 5% | 50V |
| C008 | 1-163-017-00 | CERAMIC CHIP | 0.0047MF | 10% | 50V |
| C009 | 1-124-245-00 | ELECT | 4.7MF | 20% | 25V |
| C010 | 1-163-021-00 | CERAMIC CHIP | 0.01MF | | 50V |
| C011 | 1-123-333-00 | ELECT | 100MF | 20% | 25V |
| C012 | 1-135-072-21 | TANTAL. CHIP | 0.22MF | 20% | 35V |
| C013 | 1-163-075-00 | CERAMIC CHIP | 0.047MF | | 50V |
| C014 | 1-123-333-00 | ELECT | 100MF | 20% | 25V |
| C015 | 1-135-074-21 | TANTAL. CHIP | 0.47MF | 20% | 35V |
| C016 | 1-130-491-00 | MYLAR | 0.047MF | 5% | 50V |
| C017 | 1-124-236-00 | ELECT | 47MF | 20% | 16V |
| C018 | 1-163-112-00 | CERAMIC CHIP | 62PF | 5% | 50V |
| C019 | 1-163-114-00 | CERAMIC CHIP | 75PF | 5% | 50V |
| C020 | 1-163-103-00 | CERAMIC CHIP | 27PF | 5% | 50V |
| C021 | 1-124-236-00 | ELECT | 47MF | 20% | 16V |
| C022 | 1-163-106-00 | CERAMIC CHIP | 36PF | 5% | 50V |
| C023 | 1-163-117-00 | CERAMIC CHIP | 100PF | 5% | 50V |
| C024 | 1-163-096-00 | CERAMIC CHIP | 13PF | 5% | 50V |
| C025 | 1-124-462-00 | ELECT | 10MF | 20% | 16V |
| C026 | 1-163-129-00 | CERAMIC CHIP | 330PF | 5% | 50V |
| C027 | 1-162-816-11 | CERAMIC CHIP | 180PF | 5% | 50V |
| C028 | 1-163-077-00 | CERAMIC CHIP | 0.1MF | | 50V |
| C029 | 1-163-077-00 | CERAMIC CHIP | 0.1MF | | 50V |
| C030 | 1-163-139-00 | CERAMIC CHIP | 820PF | 5% | 50V |
| C031 | 1-163-109-00 | CERAMIC CHIP | 47PF | 5% | 50V |
| C032 | 1-124-255-00 | ELECT | 1MF | 20% | 50V |
| C033 | 1-123-332-00 | ELECT | 47MF | 20% | 25V |
| C035 | 1-124-245-00 | ELECT | 4.7MF | 20% | 25V |
| C036 | 1-124-236-00 | ELECT | 47MF | 20% | 16V |
| C037 | 1-124-236-00 | ELECT | 47MF | 20% | 16V |
| C038 | 1-124-257-00 | ELECT | 2.2MF | 20% | 35V |
| C039 | 1-163-075-00 | CERAMIC CHIP | 0.047MF | | 50V |
| C040 | 1-163-133-00 | CERAMIC CHIP | 470PF | 5% | 50V |
| C041 | 1-163-077-00 | CERAMIC CHIP | 0.1MF | | 50V |
| C042 | 1-163-117-00 | CERAMIC CHIP | 100PF | 5% | 50V |
| C043 | 1-163-021-00 | CERAMIC CHIP | 0.01MF | | 50V |
| C044 | 1-124-255-00 | ELECT | 1MF | 20% | 50V |
| C045 | 1-135-070-00 | TANTAL. CHIP | 0.1MF | 20% | 35V |
| C046 | 1-124-240-00 | ELECT | 10MF | 20% | 25V |
| C047 | 1-163-141-00 | CERAMIC CHIP | 0.001MF | 5% | 50V |
| C048 | 1-163-063-00 | CERAMIC CHIP | 0.022MF | | 50V |
| C049 | 1-163-141-00 | CERAMIC CHIP | 0.001MF | 5% | 50V |
| C050 | 1-163-063-00 | CERAMIC CHIP | 0.022MF | | 50V |
| C051 | 1-163-075-00 | CERAMIC CHIP | 0.047MF | | 50V |
| C053 | 1-163-075-00 | CERAMIC CHIP | 0.047MF | | 50V |
| C054 | 1-163-113-00 | CERAMIC CHIP | 68PF | 5% | 50V |
| C055 | 1-163-075-00 | CERAMIC CHIP | 0.047MF | | 50V |
| C056 | 1-163-075-00 | CERAMIC CHIP | 0.047MF | | 50V |
| C057 | 1-163-075-00 | CERAMIC CHIP | 0.047MF | | 50V |
| | | CONNECTOR | | | |
| CN001 | *1-564-014-00 | PIN, CONNECTOR 4P | | | |

When indicating parts by reference number, please include the board name.

# TC-3

| Ref.No | Part No. | Description | Remark |
|---|---|---|---|
| CN002 | *1-564-014-00 | PIN, CONNECTOR 4P | |
| | | **TRIMMER** | |
| CV001 | 1-141-227-00 | CAP, CERAMIC TRIMMER 20PF | |
| | | **DIODE** | |
| D001 | 8-719-109-97 | DIODE RD6.8ESB2 | |
| D002 | 8-719-911-06 | DIODE 1SS106 | |
| | | **DELAY LINE** | |
| DL001 | 1-415-313-00 | DELAY LINE (1H) | |
| | | **IC** | |
| IC001 | 8-759-933-40 | IC HD14538BP | |
| IC002 | 8-759-933-74 | IC TDA2594 | |
| IC003 | 8-759-345-38 | IC TC4538BP | |
| IC004 | 8-752-006-10 | IC CX20061 | |
| | | **COIL** | |
| L001 | 1-408-787-00 | INDUCTOR CHIP 68UH | |
| L002 | 1-408-789-21 | INDUCTOR CHIP 100UH | |
| L003 | 1-408-786-21 | INDUCTOR CHIP 56UH | |
| L004 | 1-408-786-21 | INDUCTOR CHIP 56UH | |
| L005 | 1-408-788-21 | INDUCTOR CHIP 82UH | |
| L006 | 1-408-775-41 | INDUCTOR CHIP 6.8UH | |
| L007 | 1-408-776-00 | INDUCTOR CHIP 8.2UH | |
| L008 | 1-408-789-21 | INDUCTOR CHIP 100UH | |
| | | **VARIABLE COIL** | |
| LV001 | 1-408-512-00 | COIL (VARIABLE) 10UH | |
| LV002 | 1-408-530-00 | COIL (VARIABLE) 3.3UH | |
| LV003 | 1-408-512-00 | COIL (VARIABLE) 10UH | |
| | | **TRANSISTOR** | |
| Q001 | 8-729-100-67 | TRANSISTOR 2SC1623-L7 | |
| Q002 | 8-729-100-67 | TRANSISTOR 2SC1623-L7 | |
| Q003 | 8-729-100-67 | TRANSISTOR 2SC1623-L7 | |
| Q004 | 8-729-100-67 | TRANSISTOR 2SC1623-L7 | |
| Q005 | 8-729-100-67 | TRANSISTOR 2SC1623-L7 | |
| Q006 | 8-729-100-67 | TRANSISTOR 2SC1623-L7 | |
| Q007 | 8-729-901-04 | TRANSISTOR DTA114EK | |
| Q008 | 8-729-100-67 | TRANSISTOR 2SC1623 | |
| Q009 | 8-729-100-67 | TRANSISTOR 2SC1623 | |
| Q010 | 8-729-100-67 | TRANSISTOR 2SC1623 | |
| Q012 | 8-729-100-67 | TRANSISTOR 2SC1623 | |
| | | **RESISTOR** | |
| R001 | 1-216-093-00 | METAL CHIP 68K 5% 1/10W | |
| R002 | 1-216-079-00 | METAL CHIP 18K 5% 1/10W | |
| R003 | 1-216-057-00 | METAL CHIP 2.2K 5% 1/10W | |
| R004 | 1-216-043-00 | METAL CHIP 560 5% 1/10W | |
| R005 | 1-216-053-00 | METAL CHIP 1.5K 5% 1/10W | |
| R006 | 1-216-129-00 | METAL CHIP 2.2M 5% 1/10W | |
| R007 | 1-216-085-00 | METAL CHIP 33K 5% 1/10W | |
| R008 | 1-216-071-00 | METAL CHIP 8.2K 5% 1/10W | |
| R009 | 1-216-063-00 | METAL CHIP 3.9K 5% 1/10W | |
| R010 | 1-216-099-00 | METAL CHIP 120K 5% 1/10W | |
| R011 | 1-216-075-00 | METAL CHIP 12K 5% 1/10W | |
| R012 | 1-216-097-00 | METAL CHIP 100K 5% 1/10W | |
| R013 | 1-216-067-00 | METAL CHIP 5.6K 5% 1/10W | |
| R014 | 1-216-127-11 | METAL CHIP 1.8M 5% 1/10W | |
| R015 | 1-216-001-00 | METAL CHIP 10 5% 1/10W | |
| R016 | 1-216-003-11 | METAL CHIP 12 5% 1/10W | |
| R017 | 1-216-097-00 | METAL CHIP 100K 5% 1/10W | |
| R018 | 1-216-081-00 | METAL CHIP 22K 5% 1/10W | |
| R019 | 1-216-059-00 | METAL CHIP 2.7K 5% 1/10W | |
| R020 | 1-215-453-00 | METAL 22K 1% 1/6W | |
| R021 | 1-216-081-00 | METAL CHIP 22K 5% 1/10W | |
| R022 | 1-216-083-00 | METAL CHIP 27K 5% 1/10W | |
| R023 | 1-216-079-00 | METAL CHIP 18K 5% 1/10W | |
| R024 | 1-216-041-00 | METAL CHIP 470 5% 1/10W | |
| R025 | 1-216-043-00 | METAL CHIP 560 5% 1/10W | |
| R026 | 1-216-049-00 | METAL CHIP 1K 5% 1/10W | |
| R027 | 1-216-049-00 | METAL CHIP 1K 5% 1/10W | |
| R028 | 1-216-085-00 | METAL CHIP 33K 5% 1/10W | |
| R029 | 1-216-083-00 | METAL CHIP 27K 5% 1/10W | |
| R030 | 1-216-045-00 | METAL CHIP 680 5% 1/10W | |
| R031 | 1-216-045-00 | METAL CHIP 680 5% 1/10W | |
| R032 | 1-216-049-00 | METAL CHIP 1K 5% 1/10W | |
| R033 | 1-216-049-00 | METAL CHIP 1K 5% 1/10W | |
| R034 | 1-216-067-00 | METAL CHIP 5.6K 5% 1/10W | |
| R035 | 1-216-061-00 | METAL CHIP 3.3K 5% 1/10W | |
| R036 | 1-216-041-00 | METAL CHIP 470 5% 1/10W | |
| R037 | 1-216-041-00 | METAL CHIP 470 5% 1/10W | |
| R038 | 1-216-039-00 | METAL CHIP 390 5% 1/10W | |
| R039 | 1-216-041-00 | METAL CHIP 470 5% 1/10W | |
| R040 | 1-216-045-00 | METAL CHIP 680 5% 1/10W | |
| R041 | 1-216-057-00 | METAL CHIP 2.2K 5% 1/10W | |
| R042 | 1-216-049-00 | METAL CHIP 1K 5% 1/10W | |
| R043 | 1-216-037-00 | METAL CHIP 330 5% 1/10W | |
| R044 | 1-216-049-00 | METAL CHIP 1K 5% 1/10W | |
| R045 | 1-216-057-00 | METAL CHIP 2.2K 5% 1/10W | |
| R046 | 1-216-057-00 | METAL CHIP 2.2K 5% 1/10W | |
| R047 | 1-216-073-00 | METAL CHIP 10K 5% 1/10W | |
| R048 | 1-216-049-00 | METAL CHIP 1K 5% 1/10W | |
| R049 | 1-216-073-00 | METAL CHIP 10K 5% 1/10W | |
| R050 | 1-216-089-00 | METAL CHIP 47K 5% 1/10W | |
| R051 | 1-216-089-00 | METAL CHIP 47K 5% 1/10W | |
| R052 | 1-216-057-00 | METAL CHIP 2.2K 5% 1/10W | |
| R053 | 1-216-073-00 | METAL CHIP 10K 5% 1/10W | |
| R054 | 1-216-043-00 | METAL CHIP 560 5% 1/10W | |
| R055 | 1-216-053-00 | METAL CHIP 1.5K 5% 1/10W | |
| R056 | 1-216-039-00 | METAL CHIP 390 5% 1/10W | |
| R057 | 1-216-039-00 | METAL CHIP 390 5% 1/10W | |
| R058 | 1-216-073-00 | METAL CHIP 10K 5% 1/10W | |

When indicating parts by reference number, please include the board name.

| Ref.No | Part No. | Description | Remark |
|---|---|---|---|
| R059 | 1-216-091-00 | METAL CHIP 56K 5% 1/10W | |
| | | VARIABLE RESISTOR | |
| RV001 | 1-230-871-11 | RES, ADJ, METAL GLAZE 22K | |
| RV002 | 1-230-873-11 | RES, ADJ, METAL GLAZE 47K | |
| RV003 | 1-230-871-11 | RES, ADJ, METAL GLAZE 22K | |
| RV004 | 1-230-867-11 | RES, ADJ, METAL GLAZE 1K | |
| RV005 | 1-230-867-11 | RES, ADJ, METAL GLAZE 1K | |
| RV006 | 1-230-868-11 | RES, ADJ, METAL GLAZE 2.2K | |
| RV007 | 1-230-867-11 | RES, ADJ, METAL GLAZE 1K | |
| | | CRYSTAL | |
| X001 | 1-527-345-00 | CRYSTAL, OSC (4.43MHz) | |
| ********** | | | |
| | *A-7070-024-A | LD-1 BOARD, COMPLETE | |
| | | ********** | |
| | | DIODE | |
| D001 | 8-719-928-54 | DIODE GL-450S | |
| ********** | | | |
| | A-7070-025-A | MS-4 BOARD, COMPLETE | |
| | | ********** | |
| C902 | 1-163-038-00 | CERAMIC CHIP 0.1MF | 25V |
| | *1-564-671-31 | PIN, CONNECTOR (HOOK TYPE) | |
| ********** | | | |
| | | LS-9 BOARD | |
| | | ********** | |
| | *1-564-671-11 | PIN, CONNECTOR (HOOK TYPE) | |
| ********** | | | |
| | *1-621-982-11 | MJ-11 BOARD | |
| | | ********** | |
| | | CAPACITOR | |
| C725 | 1-124 462-00 | ELECT 10MF 20% | 16V |
| C726 | 1-124-462-00 | ELECT 10MF 20% | 16V |
| C731 | 1-124-462-00 | ELECT 10MF 20% | 16V |
| C732 | 1-124-225-00 | ELECT 100MF 20% | 6.3V |
| C733 | 1-163-141-00 | CERAMIC CHIP 0.001MF 10% | 50V |
| C734 | 1-163-121-00 | CERAMIC CHIP 150PF 5% | 50V |
| C741 | 1-124-462-00 | ELECT 10MF 20% | 16V |
| C742 | 1-124-225-00 | ELECT 100MF 20% | 6.3V |
| C743 | 1-163-141-00 | CERAMIC CHIP 0.001MF 10% | 50V |
| C744 | 1-163-121-00 | CERAMIC CHIP 150PF 5% | 50V |
| | | DIODE | |
| D101 | 8-719-109-60 | DIODE RD2.7ESB2 | |

| Ref.No | Part No. | Description | Remark |
|---|---|---|---|
| | | IC | |
| IC721 | 8-759-106-02 | IC UPC4570G2 | |
| | | JACK | |
| J301 | 1-507-899-21 | JACK (SMALL TYPE) | |
| J401 | 1-507-899-00 | JACK (SMALL TYPE) | |
| | | JUMPER RESISTOR | |
| JR053 | 1-216-295-00 | METAL CHIP 0 5% | 1/10W |
| JR054 | 1-216-295-00 | METAL CHIP 0 5% | 1/10W |
| JR055 | 1-216-295-00 | METAL CHIP 0 5% | 1/10W |
| JR056 | 1-216-295-00 | METAL CHIP 0 5% | 1/10W |
| JR057 | 1-216-295-00 | METAL CHIP 0 5% | 1/10W |
| JR099 | 1-216-296-00 | METAL CHIP 0 5% | 1/8W |
| | | RESISTOR | |
| R710 | 1-216-061-00 | METAL CHIP 3.3K 5% | 1/10W |
| R731 | 1-216-105-00 | METAL CHIP 220K 5% | 1/10W |
| R732 | 1-216-081-00 | METAL CHIP 22K 5% | 1/10W |
| R733 | 1-216-025-00 | METAL CHIP 100 5% | 1/10W |
| R734 | 1-216-025-00 | METAL CHIP 100 5% | 1/10W |
| R735 | 1-216-083-00 | METAL CHIP 27K 5% | 1/10W |
| R741 | 1-216-105-00 | METAL CHIP 220K 5% | 1/10W |
| R742 | 1-216-081-00 | METAL CHIP 22K 5% | 1/10W |
| R743 | 1-216-025-00 | METAL CHIP 100 5% | 1/10W |
| R744 | 1-216-025-00 | METAL CHIP 100 5% | 1/10W |
| R745 | 1-216-083-00 | METAL CHIP 27K 5% | 1/10W |
| ********** | | | |
| | *1-621-998-11 | TE-6 BOARD | |
| | | ********** | |
| | *3-716-845-01 | HOLDER (LEFT), SENSOR | |
| | | TRANSISTOR | |
| Q001 | 8-729-904-10 | PT360FS | |
| | | SWITCH | |
| S904 | 1-570-112-11 | SWITCH, LEAF | |
| S905 | 1-570-112-11 | SWITCH, LEAF | |
| ********** | | | |
| | *1-621-997-11 | TE-5 BOARD | |
| | | ********** | |
| | *3-716-844-01 | HOLDER (RIGHT), SENSOR | |
| | | PILOT LAMP | |
| PL001 | 1-518-621-11 | LAMP, PILOT | |
| PL002 | 1-518-621-21 | LAMP, PILOT | |

When indicating parts by reference number, please include the board name.

| Ref.No | Part No. | Description | | | | Remark |
|---|---|---|---|---|---|---|
| | | TRANSISTOR | | | | |
| Q001 | 8-729-904-10 | PT360FS | | | | |
| | | SWITCH | | | | |
| S001 | 1-570-112-11 | SWITCH, LEAF | | | | |
| ********** | | | | | | |
| | *1-621-993-11 | DL-15 BOARD | | | | |
| | | ********** | | | | |
| | | DIODE | | | | |
| D001 ⚠ | 8-719-109-50 | DIODE RD2.0ESB1 | | | | |
| D301 ⚠ | 8-719-500 32 | DIODE D3SB10 | | | | |
| | | IC | | | | |
| IC001 | 8-759-803-56 | IC L7808ML | | | | |
| | | TRANSISTOR | | | | |
| Q001 | 8-729-900-80 | TRANSISTOR DTC114ES | | | | |
| | | RESISTOR | | | | |
| R001 | 1-249-417-11 | CARBON | 1K | 5% | 1/6W | |
| ********** | | | | | | |
| | *1-621-992-11 | DO-1 BOARD | | | | |
| | | ********** | | | | |
| | | TRANSISTOR | | | | |
| Q501 | 8-729-303-58 | TRANSISTOR 2SC3851-0 | | | | |
| Q502 | 8-729-804-67 | TRANSISTOR 2SB1133-R | | | | |
| ********** | | | | | | |
| | *1-621-994-11 | DT-63 BOARD | | | | |
| | | ********** | | | | |
| | 1-938-846-11 | HARNESS (DD-12) | | | | |
| | | CAPACITOR | | | | |
| C102 | 1-126-175-11 | ELECT | 15000MF | 20% | 25V | |
| C103 | 1-123-334-00 | ELECT | 220MF | 20% | 25V | |
| C104 | 1-123-332-00 | ELECT | 47MF | 20% | 16V | |
| C105 | 1-123-332-00 | ELECT | 47MF | 20% | 16V | |
| C110 | 1-125-447-11 | DOUBLE LAYERS 1F | | | 5.5V | |
| C111 | 1-123-387-00 | ELECT | 47MF | 20% | 100V | |
| C112 | 1-123-387-00 | ELECT | 47MF | 20% | 100V | |
| C114 | 1-106-212-00 | MYLAR | 0.047MF | 10% | 100V | |
| C115 | 1-123-334-00 | ELECT | 220MF | 20% | 25V | |
| | | CONNECTOR | | | | |
| CN102 | *1-560-893-00 | PIN, CONNECTOR 5P | | | | |
| CN104 | *1-560-893-00 | PIN, CONNECTOR 5P | | | | |
| CN105 | *1-560-891-00 | PIN, CONNECTOR 3P | | | | |
| CN106 | *1-560-896-00 | PIN, CONNECTOR 8P | | | | |
| CN107 | *1-560-893-00 | PIN, CONNECTOR 5P | | | | |
| CN108 | *1-560-891-00 | PIN, CONNECTOR 3P | | | | |
| CN203 | *1-560-894-00 | PIN, CONNECTOR 6P | | | | |
| | | DIODE | | | | |
| D103 | 8-719-911-19 | DIODE 1SS119 | | | | |
| D104 | 8-719-911-19 | DIODE 1SS119 | | | | |
| D106 | 8-719-110-16 | DIODE RD10ES-B1 | | | | |
| D107 | 8-719-200-02 | DIODE 10E2 | | | | |
| D108 | 8-719-200-02 | DIODE 10E2 | | | | |
| D109 | 8-719-110-42 | DIODE RD15ES-B3 | | | | |
| D110 | 8-719-109-93 | DIODE RD6.2ES-B2 | | | | |
| D111 | 8-719-107-94 | DIODE 1SS202 | | | | |
| D112 | 8-719-115-21 | DIODE RD39JSB | | | | |
| D114 | 8-719-109-98 | DIODE RD6.8ES-B3 | | | | |
| D115 | 8-719-110-42 | DIODE RD15ESB3 | | | | |
| D116 | 8-719-110-16 | DIODE RD10ES-B1 | | | | |
| D117 | 8-719-109-82 | DIODE RD4.7ES-B3 | | | | |
| D119 | 8-719-911-19 | DIODE 1SS119 | | | | |
| | | IC LINK | | | | |
| PS101⚠ | 1-532-727-11 | LINK, IC (ICP-N5) | | | | |
| PS102⚠ | 1-532-605-00 | LINK, IC (ICP-N10) | | | | |
| PS103⚠ | 1-532-686-00 | LINK, IC (ICP-F75) | | | | |
| PS104⚠ | 1-532-727-11 | LINK, IC (ICP-N5) | | | | |
| | | TRANSISTOR | | | | |
| Q103 | 8-729-103-43 | TRANSISTOR 2SB734 | | | | |
| Q106 | 8-729-177-32 | TRANSISTOR 2SD773 | | | | |
| Q107 | 8-729-177-32 | TRANSISTOR 2SD773 | | | | |
| | | RESISTOR | | | | |
| R103 | 1-249-421-11 | CARBON | 2.2K | 5% | 1/6W | |
| R104 | 1-249-421-11 | CARBON | 2.2K | 5% | 1/6W | |
| R105 | 1-246-449-25 | CARBON | 100 | 5% | 1/4W | |
| R107 | 1-249-425-11 | CARBON | 4.7K | 5% | 1/6W | |
| R108 | 1-249-434-11 | CARBON | 27K | 5% | 1/6W | |
| R109 | 1-249-441-11 | CARBON | 100K | 5% | 1/6W | |
| R111 | 1-249-431-11 | CARBON | 15K | 5% | 1/6W | |
| R112 | 1-249-422-11 | CARBON | 2.7K | 5% | 1/6W | |
| R113 | 1-249-416-11 | CARBON | 820 | 5% | 1/6W | |
| ********** | | | | | | |

1

The components identified by shading and mark ⚠ are critical for safety. Replace only with part number specified.

When indicating parts by reference number, please include the board name.

| Ref.No | Part No. | Description | Remark |
|---|---|---|---|
| | | MISCELLANEOUS | |
| | | ********** | |
| | ⚠1-464-690-11 | MODULATOR, RF (RFU-857) | |
| | 1-464-784-11 | ENCODER, ROTARY | |
| | 1-464-785-11 | SWICH BLOCK, CONTROL | |
| | ⚠1-534-817-XX | CORD, POWER | |
| | 1-535-535-11 | TERMINAL, SHAFT GROUND | |
| | *1-555-110-00 | CABLE, PIN | |
| C901 | 1-161-057-00 | CAP, CERAMIC 0.033MF X C901 | |
| M901 | X-3711-961-1 | MOTOR SUB ASSY, REEL | |
| M903 | 8-835-138-01 | MOTOR, DC (DNR-5301B) (CONTROL) | |
| M904 | A-7040-065-A | MOTOR ASSY, L (LOADING) | |
| M905 | A-7090-661-A | MOTOR BLOCK ASSY, LS (LINEAR SKATE) | |
| M906 | 8-835-247-01 | MOTOR, DC BHF-2804D (CAPSTAN) | |
| PM901 | ⚠1-454-377-31 | SOLENOID, PLUNGER (BRAKE) | |
| S901 | 1-554-942-11 | SWITCH, PUSH (RECOG R) | |
| S902 | 1-554-942-11 | SWITCH, PUSH (RECOG L) | |
| T401 | ⚠1-448-836-11 | TRANSFORMER, POWER | |

**********

ACCESSORIES AND PACKING MATERIALS
**********

| Part No. | Description | Remark |
|---|---|---|
| A-6767-420-A | COMMANDER ASSY | |
| 1-534-049-31 | CORD, CONNECTION (RK-74H) | |
| 1-551-513-00 | CORD ASSY, COAXIAL | |
| 1-551-734-11 | CORD, CONNECTION | |
| *3-677-503-00 | SHEET, PROTECTION | |
| 3-694-484-01 | DRIVER, VOLUME | |
| *3-713-408-01 | CASE, ACCESSORY | |
| *3-713-409-01 | CUSHION (UPPER) | |
| *3-713-410-01 | CUSHION (LOWER) | |
| *3-713-465-01 | LID, ACCESSORY CASE | |
| *3-713-487-01 | INDIVIDUAL CARTON (WG MODEL) | |
| *3-713-605-01 | INDIVIDUAL CARTON (AEP MODEL) | |
| 3-765-626-11 | MANUAL, INSTRUCTION (ENGLISH) | |
| 3-765-626-41 | MANUAL, INSTRUCTION (FRENCH, GERMANS, DUTCH) | |
| 3-765-626-51 | MANUAL, INSTRUCTION (SPANISH, SWEDISH, ITALIAN) | |
| X-3711-986-1 | INSULATOR ASSY | |

**********

The components identified by shading and mark ⚠ are critical for safety. Replace only with part number specified.

When indicating parts by reference number, please include the board name.

# SECTION 7
# MECHANISM ADJUSTMENT

## 7-1. MECHANICAL CHECK, ADJUSTMENT AND PREPARATIONS FOR REPLACEMENT

Note: Regarding the removal procedures of the cabinet and board, see Section 2.

### 7-1-1. Cassette Compartment Assembly And Operation Without Tape Inserted

**Note:** The set will not operate if there is a strong light source near it.

#### 1. Method to loading (See Fig. 7-1)

1) Remove the front panel and covers (upper, lower) according to item Section 2, 2-1 and 2-2.
2) Connect a power supply and press the power button to turn on.
3) Press the EJECT button.
4) Disconnect power supply.
5) According to item Section 2, 2-14, remove the cassette compartment assembly.
6) Place tape over the pin coming out of the push switch ❶.
7) Place a cap ❷ over the LED assembly.
8) Press the lock holder ❸ in the direction of arrow Ⓐ.
9) Short-circuit the leaf switch ❹ by clip ❺, etc.
10) Connect power supply and press the power button to turn on.

#### 2. Putting into Playback State (See Fig. 7-1)

1) Perform the loading procedure in 1.
2) Place the rubber band ❻ as shown between S reel and T reel sides.
3) Press the playback button, and when the T reel side starts to rotate, press the tension regulator arm assembly ❼ in the direction of arrow Ⓑ. (At this time, the tension regulator band is released and the S reel side rotates.)
4) Press the stop button to stop.

#### 3. Putting into Recording State (See Fig. 7-1)

1) Perform the loading procedure in 1.
2) Place a rubber band ❻ as shown between the S reel and T reels.
3) Press the recording button, and when the T reel side starts to rotate, push the tension regulator arm assembly ❼ in the direction of arrow Ⓑ. (At this time, the tension regulator band is released and the S reel side rotates.)
4) Press the stop button to stop.

#### 4. Eject

1) Press the EJECT button.

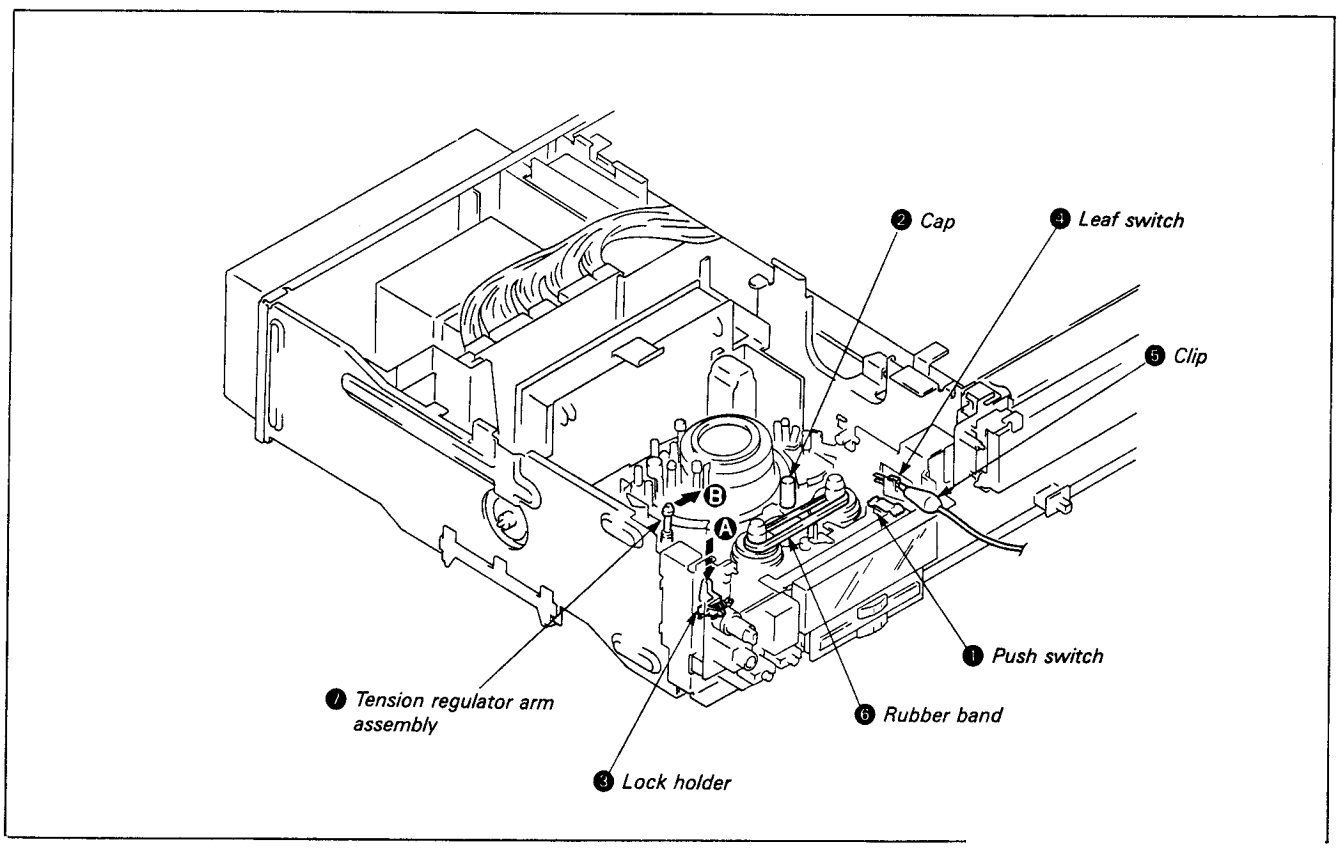


*Fig. 7-1.*

## 7-1-2. Handling of Mode Selector

### 1. Location of parts (External view)

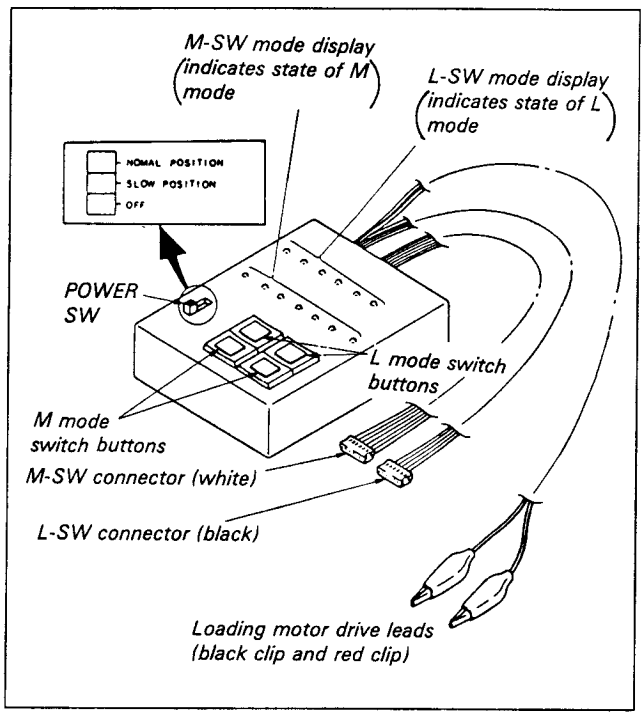


*Fig. 7-2.*

### 2. Connection (See Fig. 7-3.)

1) Remove the front panel and covers (upper, lower) according to item Section 2, 2-1 and 2-2.
2) According to item Section 2, 2-14, remove the cassette compartment assembly.
3) Remove the MS-4 board and LS-9 board connectors.
4) Insert the M-SW connector (6P connector, 6 harness, white) ❶ into the set MS-4 board.
5) Insert the L-SW connector (6P connector, 4 harness, black) ❷ into the set LS-9 board.
6) Connect the loading motor drive lead ❸ red lead side to the loading motor red clip and the brown lead to the black clip.

### 3. Caution

1) When operating L-SW, be sure to set the M-SW mode to LOADING/UNLOADING.
2) When operating M-SW, be sure to set the L-SW mode to TOP or END.

### 4. Handling

BLANK lights up regardless of L MODE or M MODE when it is in neither mode during select.

1) L MODE
   - When the L mode switch button right side is pressed continuously, the display lights up from LOADING TOP ➡ LOADING END, in order from left to right.
   - To go from LOADING END ➡ LOADING TOP, press the left button continuously until the desired MODE is reached.
   - In slow position, the L mode operates more slowly than for normal position.
2) M MODE
   - Set L-SW to LOADING TOP before performing EJECT.
   - Set L-SW to LOADING END to perform FF/REW ➡ RVS or RVS ➡ FF/REW.
   - When the right M MODE switch button is pressed continously, the display lights up from EJECT ➡ RVS in order from left to right.
   - To go from RVS ➡ EJECT, press the left side switch button continously until the desired MODE is reached.

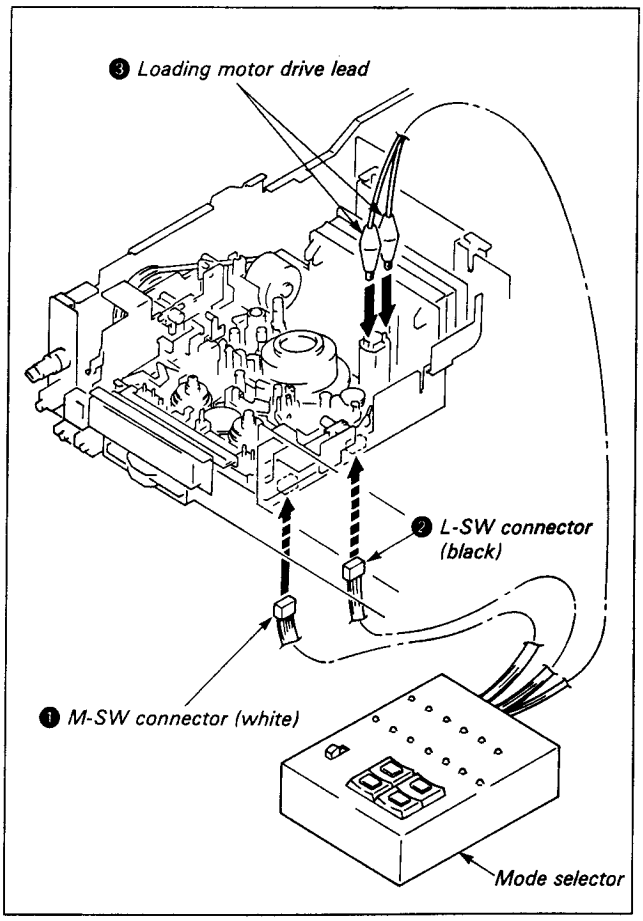


*Fig. 7-3.*

## 5. Mode Selector Schematic

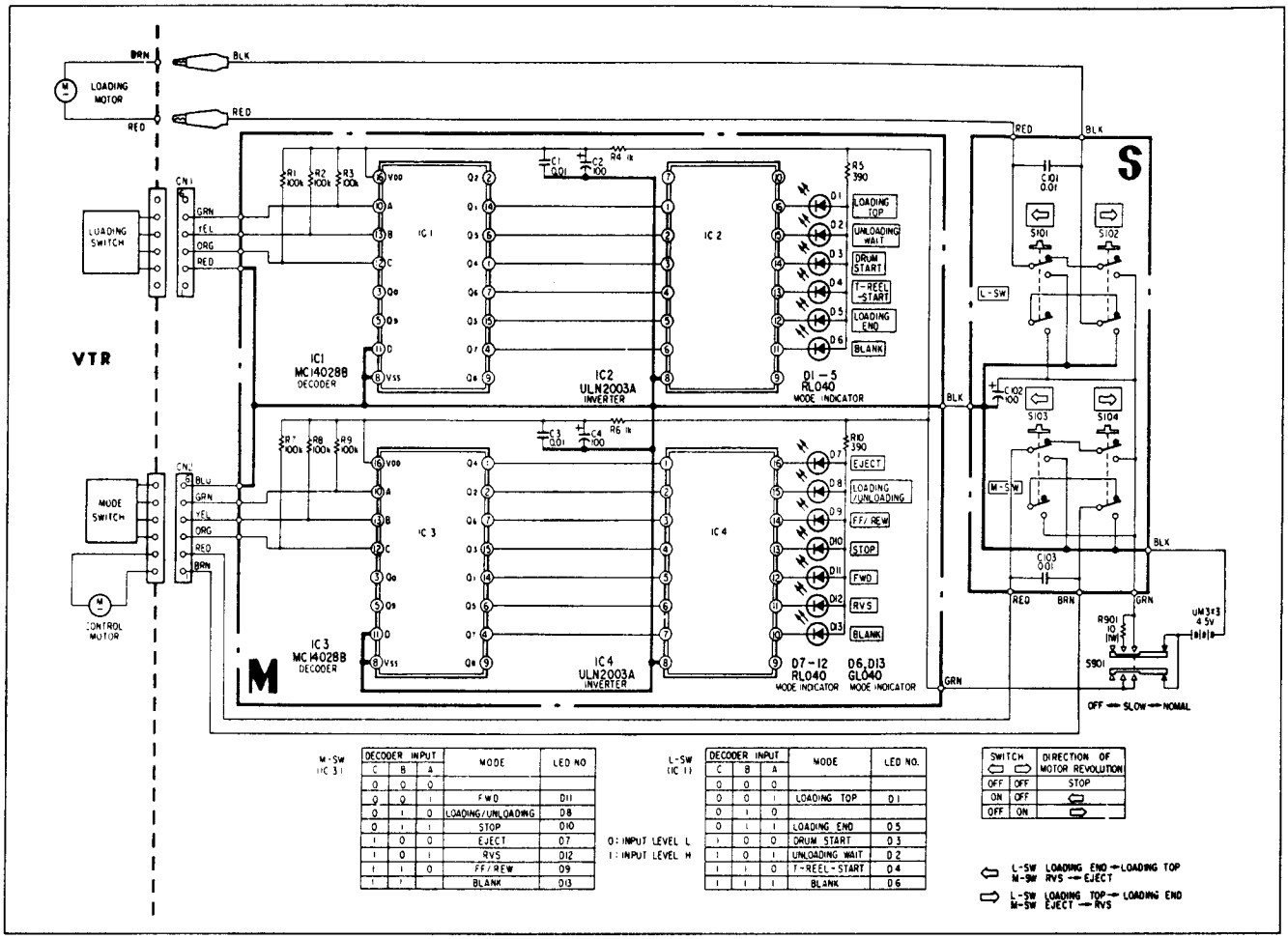


M-SW (IC 3)

| DECODER INPUT C | B | A | MODE | LED NO. |
|---|---|---|---|---|
| 0 | 0 | 0 | | |
| 0 | 0 | 1 | FWD | D11 |
| 0 | 1 | 0 | LOADING/UNLOADING | D8 |
| 0 | 1 | 1 | STOP | D10 |
| 1 | 0 | 0 | EJECT | D7 |
| 1 | 0 | 1 | RVS | D12 |
| 1 | 1 | 0 | FF/REW | D9 |
| 1 | 1 | 1 | BLANK | D13 |

L-SW (IC 1)

| DECODER INPUT C | B | A | MODE | LED NO. |
|---|---|---|---|---|
| 0 | 0 | 0 | | |
| 0 | 0 | 1 | LOADING TOP | D1 |
| 0 | 1 | 0 | | |
| 0 | 1 | 1 | LOADING END | D5 |
| 1 | 0 | 0 | DRUM START | D3 |
| 1 | 0 | 1 | UNLOADING WAIT | D2 |
| 1 | 1 | 0 | T-REEL-START | D4 |
| 1 | 1 | 1 | BLANK | D6 |

0: INPUT LEVEL L
1: INPUT LEVEL H

| SWITCH ⇦ | ⇨ | DIRECTION OF MOTOR REVOLUTION |
|---|---|---|
| OFF | OFF | STOP |
| ON | OFF | ⇦ |
| OFF | ON | ⇨ |

⇦ L-SW LOADING END → LOADING TOP
M-SW RVS → EJECT

⇨ L-SW LOADING TOP → LOADING END
M-SW EJECT → RVS

## 6. Mode Selector Parts List

| Symbol | Part No. | Part Name | | |
|---|---|---|---|---|
| | | capacitors | | |
| C1 | 1-108-579-00 | mylar | 0.01μF | 50V |
| C2 | 1-123-333-00 | electrolytic | 100μF | 24V |
| C3 | 1-108-579-00 | mylar | 0.01μF | 50V |
| C4 | 1-123-333-00 | electrolytic | 100μF | 24V |
| C101 | 1-108-579-00 | mylar | 0.01μF | 50V |
| C102 | 1-123-333-00 | electrolytic | 100μF | 24V |
| C103 | 1-108-579-00 | mylar | 0.01μF | 50V |
| | | Diodes | | |
| D1 | 8-179-812-31 | diode | RL040 | |
| D2 | 8-179-812-31 | diode | RL040 | |
| D3 | 8-179-812-31 | diode | RL040 | |
| D4 | 8-179-812-31 | diode | RL040 | |
| D5 | 8-179-812-31 | diode | RL040 | |
| D6 | 8-719-812-33 | diode | GL040 | |
| D7 | 8-179-812-31 | diode | RL040 | |
| D8 | 8-179-812-31 | diode | RL040 | |
| D9 | 8-179-812-31 | diode | RL040 | |
| D10 | 8-179-812-31 | diode | RL040 | |
| D11 | 8-179-812-31 | diode | RL040 | |
| D12 | 8-179-812-31 | diode | RL040 | |
| D13 | 8-719-812-33 | diode | GL040 | |

| Symbol | Part No. | Part Name | | |
|---|---|---|---|---|
| | | IC | | |
| IC1 | 8-759-240-28 IC | TC4028BP | | |
| IC2 | 8-759-120-03 | IC | μPA2003A | |
| IC3 | 8-759-240-28 | IC | TC4028BP | |
| IC4 | 8-759-120-03 | IC | μPA2003A | |
| | | resistor | | |
| R1 | 1-247-179-00 | carbon | 100K | 1/4W |
| R2 | 1-247-179-00 | carbon | 100K | 1/4W |
| R3 | 1-247-179-00 | carbon | 100K | 1/4W |
| R4 | 1-247-131-00 | carbon | 1K | 1/4W |
| R5 | 1-247-121-00 | carbon | 390 | 1/4W |
| R6 | 1-247-131-00 | carbon | 1K | 1/4W |
| R7 | 1-247-179-00 | carbon | 100K | 1/4W |
| R8 | 1-247-179-00 | carbon | 100K | 1/4W |
| R9 | 1-247-179-00 | carbon | 100K | 1/4W |
| R10 | 1-247-121-00 | carbon | 390 | 1/4W |
| R901 | 1-214-594-00 | metal film | 10 | 1W |

## 7-2. PERIODIC CHECK AND MAINTENANCE

Please perform the following periodic checks and maintenance in order to obtain optimum set function and performance, and to keep the mechanism and tape in good condition. Also, perform the maintenance below after repair, regardless of the length of time the set has been used by the user.

### 7-2-1. Cleaning of Rotary Drum Assembly

1) Press a chamois cloth (Ref. No. J-2) soaked in cleaning fluid (Ref. No. J-1) lightly against the rotary drum assembly, and slowly rotate the rotary upper drum assembly counterclockwise by finger to clean.

**Note:** Do not use the power supply to rotate the motor, and do not rotate the drum clockwise by finger.
Also, there is a danger of damaging the head tip if the chamois cloth is moved vertically relative to the head tip, so please follow the instruction above for cleaning.

### 7-2-2. Cleaning of Tape Path (See Fig. 7-4)

1) Place the cassette compartment assembly in EJECT state, and clean the tape path (No. 1 ~ No. 11 guides, capstan shaft, pinch roller) with a chamois cloth soaked in cleaning fluid.

### 7-2-3. Cleaning of Drive System

1) Clean the drive system (timing belt, surface of reel tables) with a chamois cloth soaked in cleaning fluid.

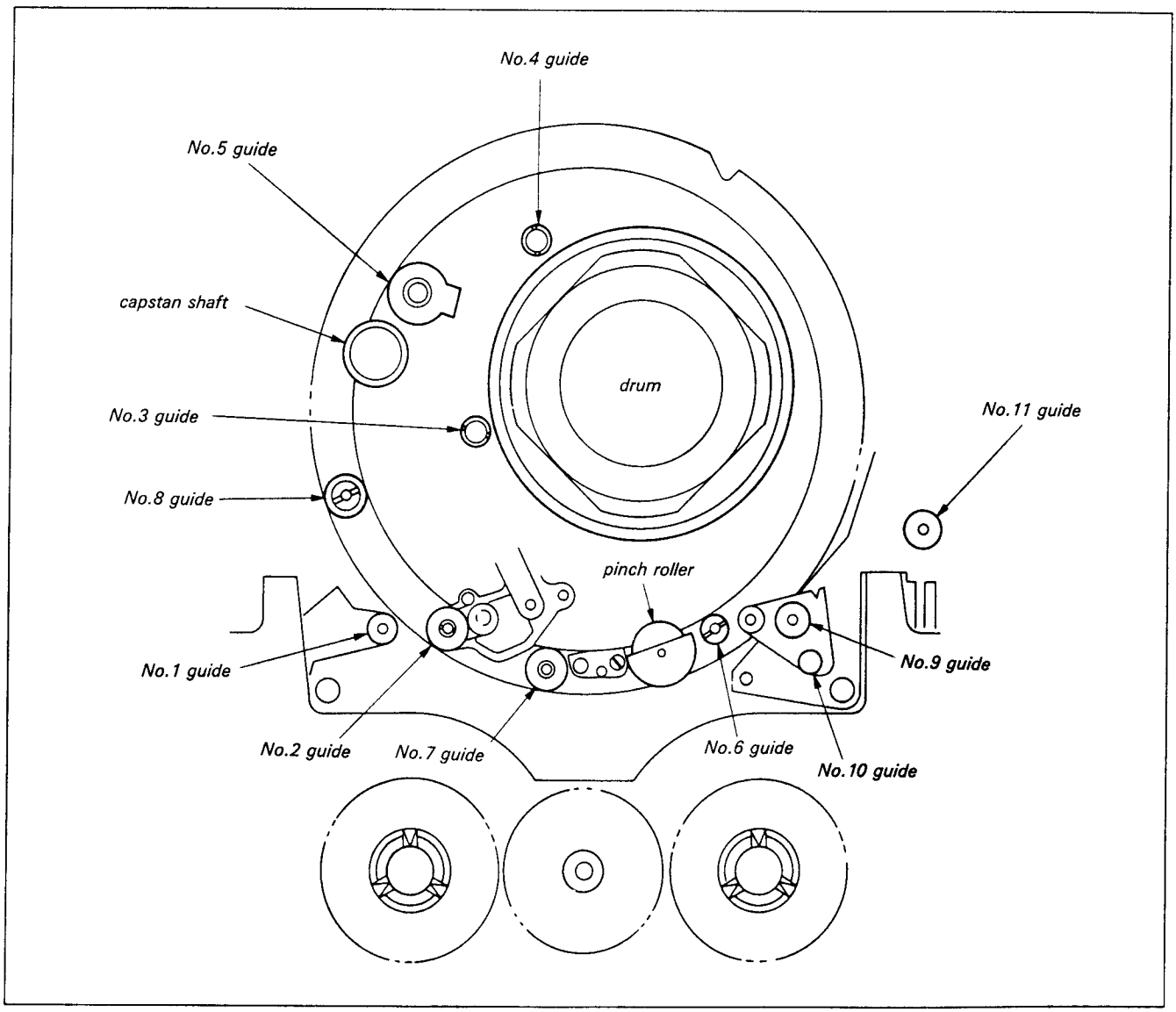


*Fig. 7-4.*

### 7-2-4. Periodic Check

Perform following according to number of hours of use.

○Cleanning ◎Oiling ★Replacement ☆Checking

| | Location | Hours of Use (H) | | | | | | | | | | Notes |
|---|---|---|---|---|---|---|---|---|---|---|---|---|
| | | 500 | 1,000 | 1,500 | 2,000 | 2,500 | 3,000 | 3,500 | 4,000 | 4,500 | 5,000 | |
| Tape Path | Cleaning of tape path surface | ○ | ○ | ○ | ○ | ○ | ○ | ○ | ○ | ○ | ○ | Be careful of oil |
| | Cleaning and degaussing of rotary drum assembly | ○ | ○ | ○ | ○ | ○ | ○ | ○ | ○ | ○ | ○ | Be careful of oil |
| Drive System | L motor belt | ○ | ○ | ○ | ○ | ○ | ○ | ○ | ★ | ○ | ○ | 3-686-546-01 Replace here, or every two years. |
| | Plunger solenoid | — | — | — | ○ | — | — | — | ○ | — | — | 1-454-377-31 |
| | Capstan shaft bearing | — | ◎ | — | ◎ | — | ◎ | — | ◎ | — | ◎ | Be careful not to get oil on the tape path surface. |
| | Loading motor | — | ☆ | — | ☆ | — | ☆ | — | ☆ | — | ☆ | A-7040-065-A |
| | Control motor | — | ☆ | — | ☆ | — | ☆ | — | ☆ | — | ☆ | 8-835-110-01 |
| | LS motor belt | ○ | ○ | ○ | ○ | ○ | ○ | ○ | ★ | ○ | ○ | 3-713-670-01 |
| | LS motor | — | ☆ | — | ☆ | — | ☆ | — | ☆ | — | ☆ | A-7090-661-A |
| | Reel motor | — | ☆ | — | ☆ | — | ☆ | — | ☆ | — | ☆ | A-7040-066-A |
| Performance Check | Abnormal noise | ☆ | ☆ | ☆ | ☆ | ☆ | ☆ | ☆ | ☆ | ☆ | ☆ | |
| | Back tension measurement | — | ☆ | — | ☆ | — | ☆ | — | ☆ | — | ☆ | |
| | Brake system | — | ☆ | — | ☆ | — | ☆ | — | ☆ | — | ☆ | |
| | FWD, RVS torque measurement | — | ☆ | — | ☆ | — | ☆ | — | ☆ | — | ☆ | |

**Note:** When performing an overhaul, refer to the items above when replacing parts.

**Note:** Sony Oil

- Be sure to use Sony Oil. (There is a danger of trouble occurring if a different viscosity is used.)
  Sony Oil: Parts No. 7-661-018-01 (Mitsubishi Diamond oil Hydrofluid EP56)
- Be sure to use clean oil when lubricating the shaft bearing, because there is a danger of wear and burning if dirty oil is used.
- One drop of oil means the amount which sticks to a 2mm diameter rod, as shown in Fig. 7-5.

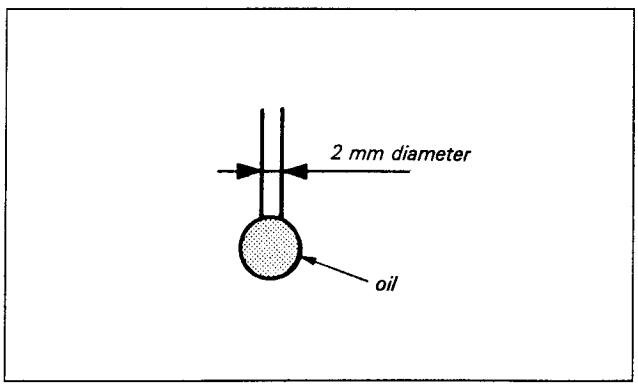


*Fig. 7-5.*

### 7-2-5. Service Jig Table

| Ref. No. | Name | Part No. | Jig | Use, Notes |
|---|---|---|---|---|
| J-1 | Cleaning fluid | Y-2031-001-1 | ——— | |
| J-2 | Chamois cloth | 2-034-697-00 | ——— | |
| J-3 | Head degausser | Commercially sold | ——— | |
| J-4 | Small adjustment mirror, spare mirror | J-6080-029-A<br>J-6080-030-1 | SL-5052 | Tape path |
| J-5 | Alignment tape (WR5-1C) | 8-967-995-06 | | Tape path |
| J-6 | Dial tension gauge | J-6080-827-A | | torque measurement |
| J-7 | Tension measurement reel | J-6080-831-A | | with $\phi$30 tape |
| J-8 | Tension measurement reel | J-6080-832-A | | with $\phi$16 string |
| J-9 | No. 10 gear phase jig | J-6080-823-A | GD-2047 | |
| J-10 | Rotary drum jig | (packed with the repair rotary upper drum) | | |
| J-11 | No. 6 guide lock jig | J-6080-826-A | | |
| J-12 | FWD, RVS take-up torque cassette | J-6080-824-A | GD-2089 | |
| J-13 | Mode selector | J-6080-825-A | | for all models |
| J-14 | TRACK SHIFT & MONITOR JIG | J-6080-851-A | | Tape path |
| J-15 | RF/SWP connector | J-6080-883-A | | Tape path |
| J-16 | CTL connector | J-6080-884-A | | Tape path |

Other equipment: Oscilloscope
Analog tester (20kΩ)

J-1

J-2

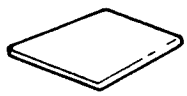

J-3

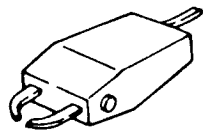

J-4

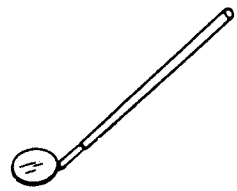

J-5

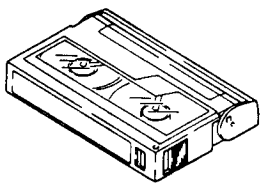

J-6

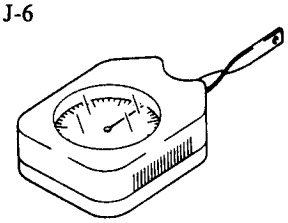

J-7

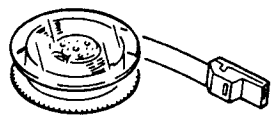

J-8

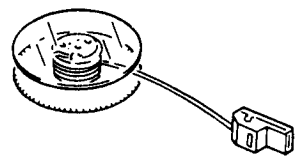

J-9

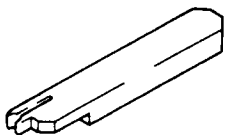

J-10 (Packed with repair use rotary upper drum)

J-11

J-12

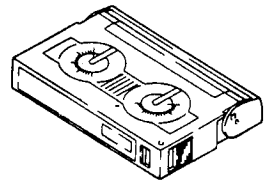

J-13

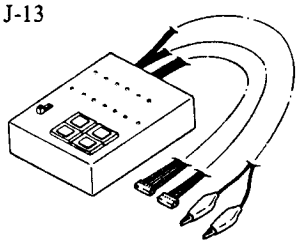

J-14

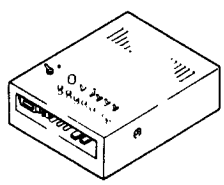

J-15

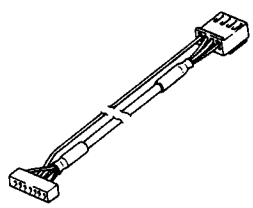

J-16

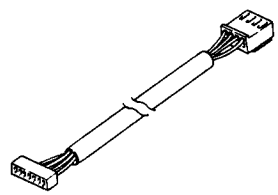

## 7-3. MECHANICAL CHECK, ADJUSTMENT AND REPLACEMENT

**Note:** Use the mode selector (Ref. No. J-13) for this mechanical check, adjustment and replacement.
The mode inside the [ ] is the mode set by pressing the mode selector button.

### 7-3-1. S Reel Table Assembly (See Fig. 7-6.)

#### 1. Removal

1) Remove the cassette compartment assembly according to item Section 2, 2-14.
2) Set to [FF/REW] mode.
3) Remove screw ❶ and reel table stopper ❷.
4) Remove the S reel table assembly ❸.

**Note:** Be sure to hold the upper reel hook when removing.

#### 2. Mounting

1) Place a half drop of oil on the spindle ❹ upper surface.
2) Move the S main brake assembly, ❺ in the direction of arrow.
3) Mount the S reel table assembly ❸, being careful not to hit the tension regulator band assembly ❻.
4) Mount the reel table stopper ❷ and tighten with screw ❶.
5) Set to [LOADING/UNLOADING] mode.
6) Mount the cassette compartment assembly by following the procedure in item Section 2, 2-14. in reverse.

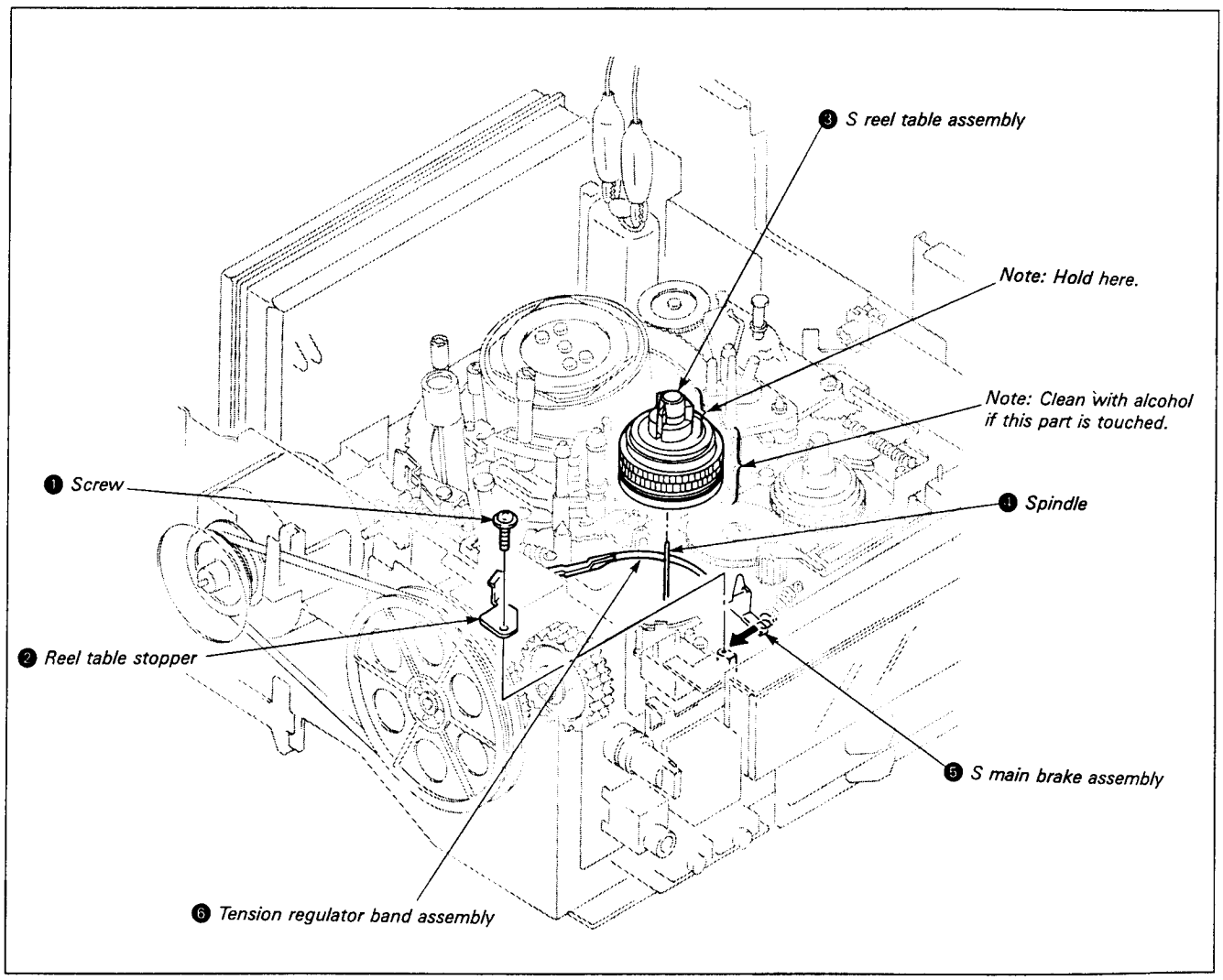


*Fig. 7-6.*

### 7-3-2. T Reel Table Assembly (See Fig. 7-7.)

#### 1. Removal

1) Remove the cassette compartment assembly according to item Section 2, 2-14.
2) Set to [UNLOADING WAIT] mode.
3) Place the spring ❷ on the T.S brake assembly ❶ on the hook on the lock slider assembly.
4) Remove the stopper washer ❸ and the T soft brake assembly ❶.
5) Set to [EJECT] mode.
6) Move drive gear (B) assembly ❹ in the direction of arrow.
7) Remove T reel table assembly ❺.

**Note:** Be sure to hold the upper reel hook when removing.

#### 2. Mounting

1) Place a half drop of oil on the spindle ❻ upper surface.
2) Move the drive gear (B) assembly ❹ in the direction of arrow. (Check [EJECT] mode.)
3) Mount the T reel table assembly ❺.
4) Mount the T soft brake assembly ❶ and the stopper washer ❸.
5) Place the spring ❷ on the T.S brake assembly ❶ hook.
6) Set to [LOADING TOP], [LOADING/UNLOADING] mode.
7) Mount the cassette compartment assembly by following the procedure in item Section 2, 2-14. in reverse.

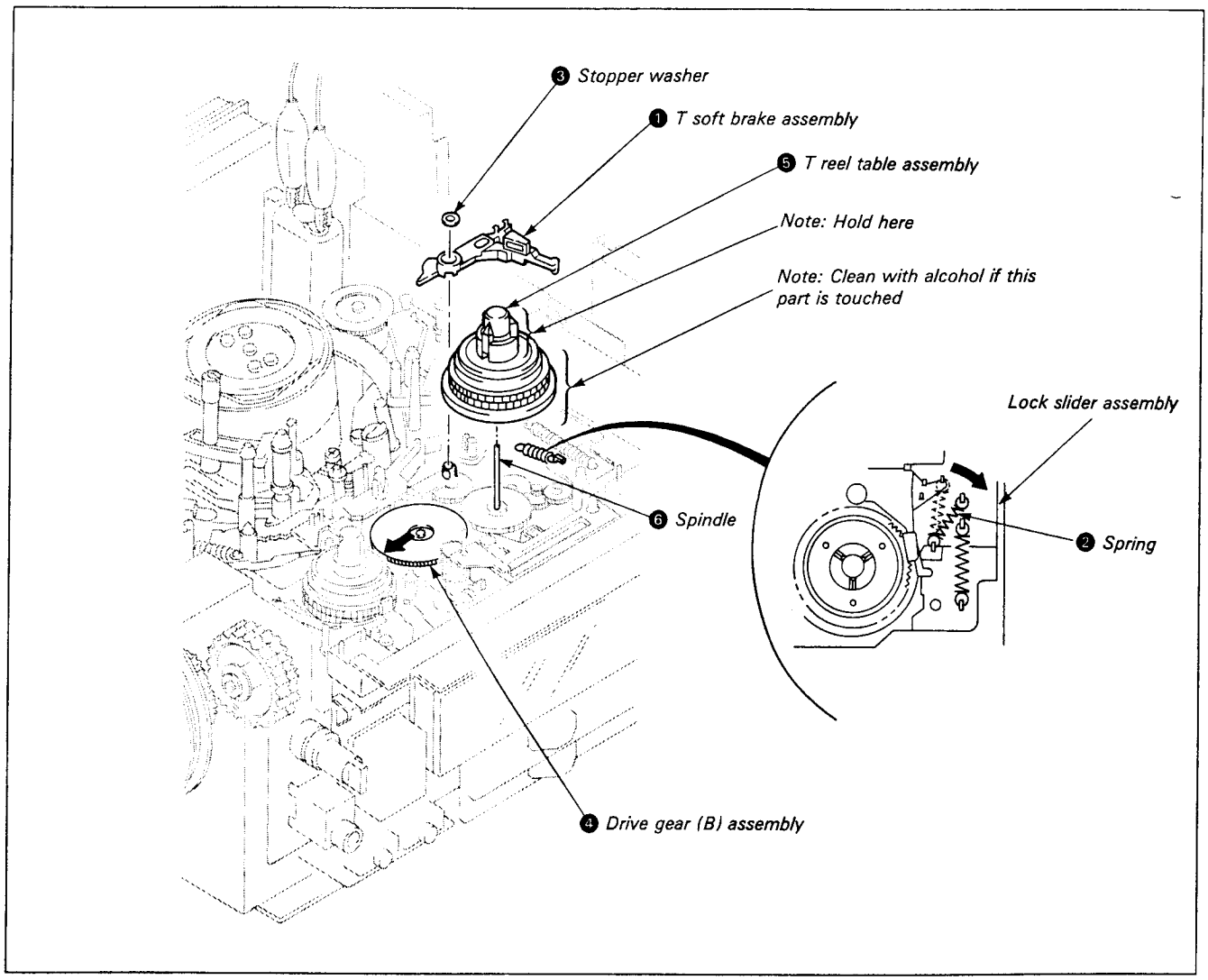


*Fig. 7-7.*

### 7-3-3. Pinch Press Arm Assembly (See Fig. 7-8)

#### 1. Removal

1) Remove the cassette compartment assembly according to item Section 2, 2-14.
2) Place the spring ❶ on the pinch press arm assembly ❷.
3) Remove the stopper washer ❸ and the pinch press arm assembly ❷.

#### 2. Mounting

1) Place a half drop of oil on shaft ❹.
2) Mount the pinch press arm assembly ❷ and the stopper washer ❸.
3) Place the spring ❶ on the tension regulator spring hook assembly ❺.
4) Mount the cassette compartment assembly by following the procedure in item Section 2, 2-14. in reverse.

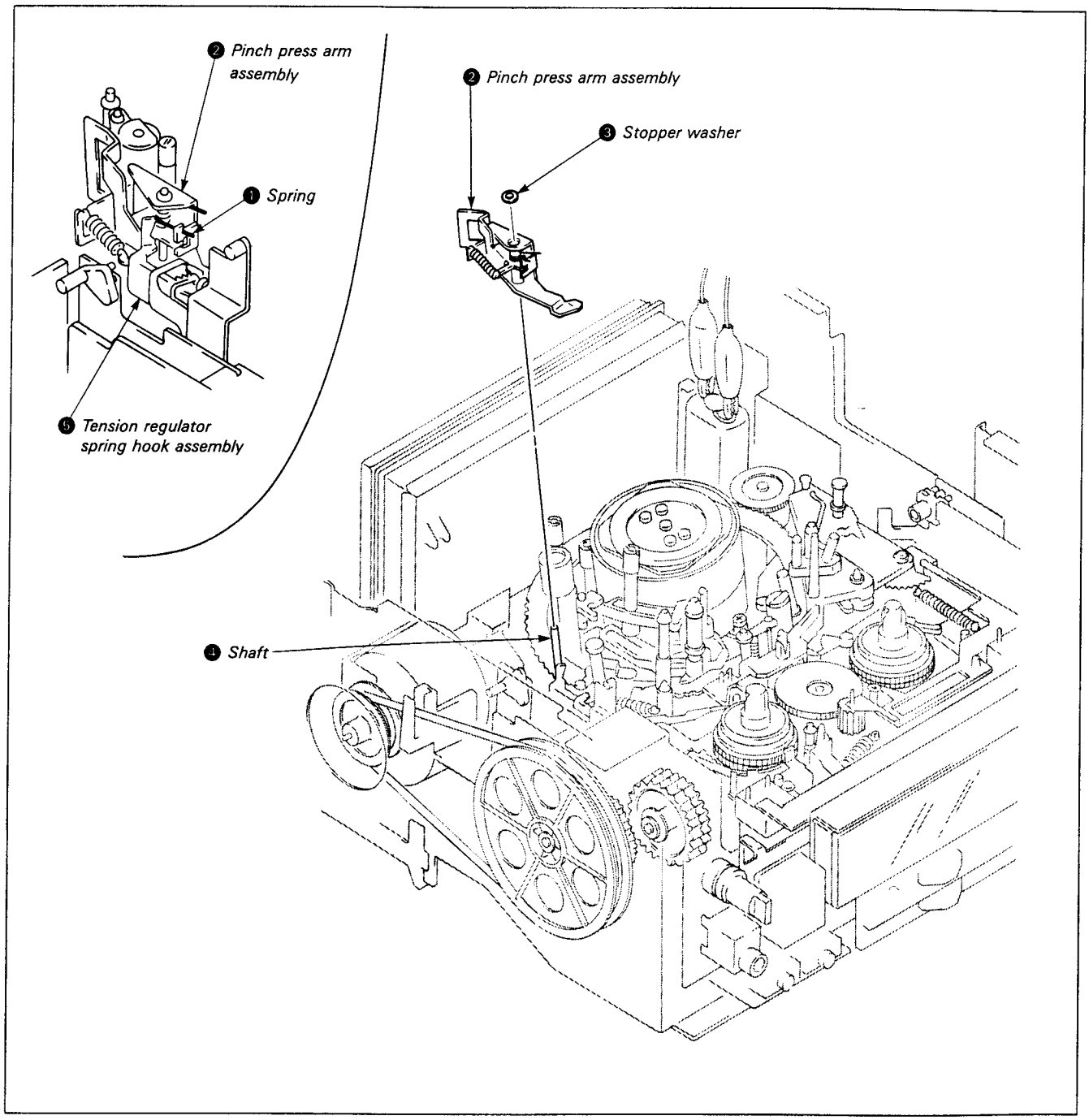


*Fig. 7-8.*

### 7-3-4. Tension Regulator Arm Assembly (See Fig. 7-9.)

#### 1. Removal

1) Remove the cassette compartment assembly according to item Section 2, 2-14.
2) Remove the mechanism as described in item Section 2, 2-15.
3) Remove the LS motor belt ❶.
4) Remove the Four screws ❷, and then move the Front base ❸ in the direction of arrow.
5) Change the spring position as described in 7-3-3. 1. Removal, 2). (See Fig. 7-8.)
6) Remove tension spring ❹. (Note its position.)
7) Remove screw ❺ and the tension regulator spring hook assembly ❻.
8) Set to FF/REW mode.
9) Remove the tension regulator band assembly hook ❼.
10) Remove the tension regulator arm assembly ❽.

#### 2. Mounting

1) Place a half drop of oil on the spindle ❾.
2) Mount the tension regulator arm assembly ❽, placing the tension regulator load arm assembly pin ❿ in the tension regulator arm assembly ❽ cam groove (on the back).
3) Mount the tension regulator band assembly hook ❼. (Do not touch the band or change its shape.)
4) Set to LOADING/UNLOADING mode.
5) Mount the tension regulator spring hook assembly ❻ and tighten with screw ❺.
6) Replace tension spring ❹ in its original position and lock the screws.
7) Position the spring according to item 7-3-3, 2. Mounting, 3). (See Fig. 7-8.)
8) Mount the Front base ❸, and then tighten with four screws ❷.
9) Mount the LS motor belt ❶.
10) Mount the mechanism by following the procedure in Section 2, 2-15. in reverse.
11) Mount the cassette compartment assembly by following the procedure in item Section 2, 2-14. in reverse.

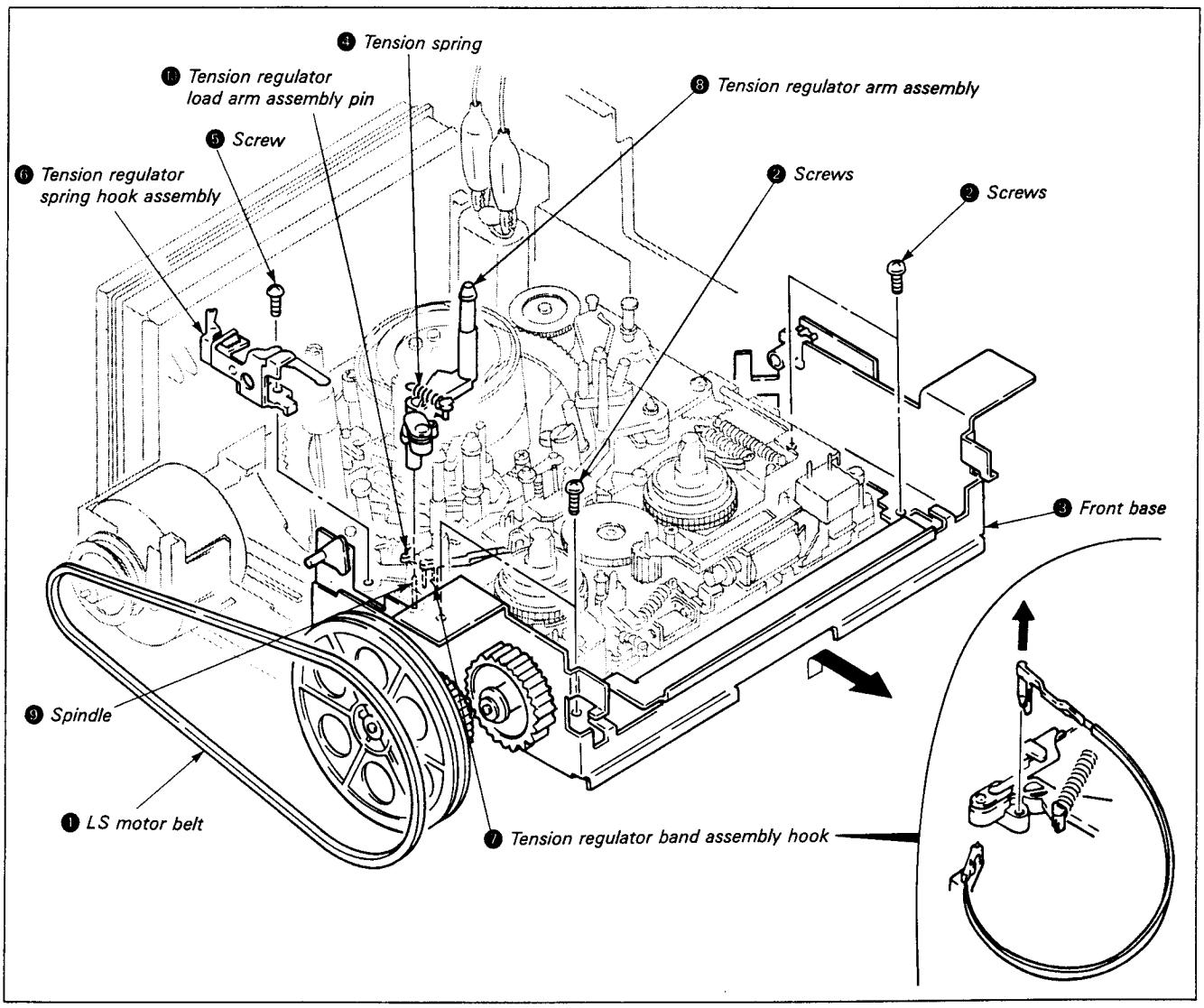


*Fig. 7-9.*

### 7-3-5. Tension Regulator Band Assembly (See Fig. 7-10.)

#### 1. Removal

1) Remove the S reel table assembly according to item 7-3-1, 1. Removal. (See Fig. 7-6.)
2) Remove the band arm hook ❶.
3) Remove hook ❷ and the tension regulator band assembly ❸.

#### 2. Mounting

1) Mount the tension regulator band assembly ❸. (Do not touch the band or change its shape.)
2) Fit on the band arm hook ❶.
3) Mount the S reel table assembly according to 7-3-1, 2. Mounting. (See Fig. 7-6.)
4) Perform 7-3-21. FWD Back Tension Adjustment.

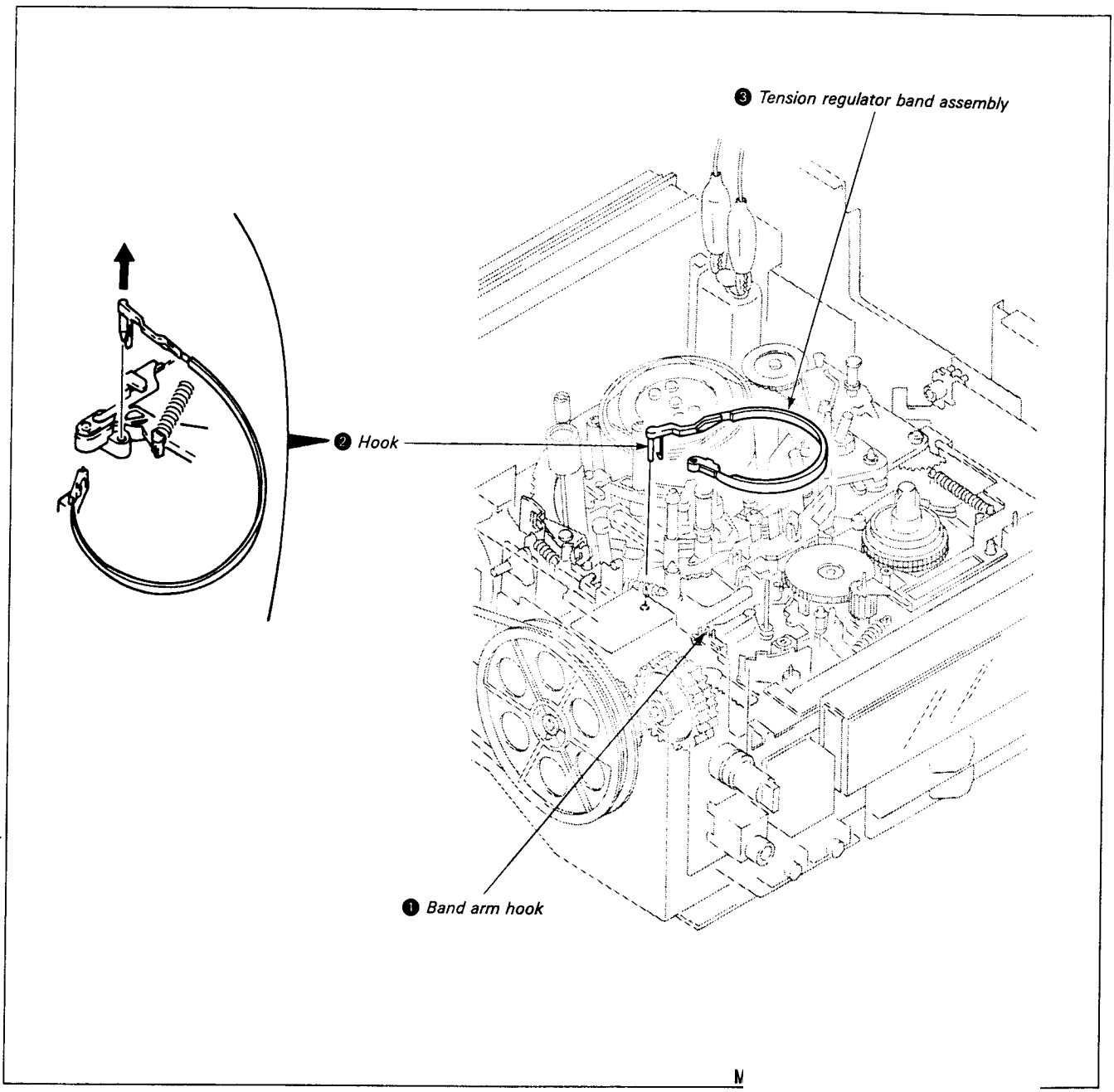


*Fig. 7-10.*

### 7-3-6. Loading Motor Assembly (See Fig. 7-11.)

#### 1. Removal

1) Connect a power supply and press the push button to turn on.
2) Press the EJECT button.

**Note:** Disconnect the power supply after being set to EJECT state.

3) Open the SP-2 board ❶ according to item Section 2, 2-6.
4) Remove connector ❷ from SP-2 board ❶.
5) Remove L motor belt ❸.
6) Remove the two screws ❹.
7) Remove the claw ❺ and the loading motor assembly ❻.

#### 2. Mounting

1) Mount the loading motor assembly ❻ and tighten the two screws ❹.
2) Mount L motor belt ❸.
3) Connect connector ❷ to SP-2 board ❶. (See Fig. 3-6)
4) Mount SP-2 board ❶ by following the procedure in item Section 2, 2-6. in reverse.

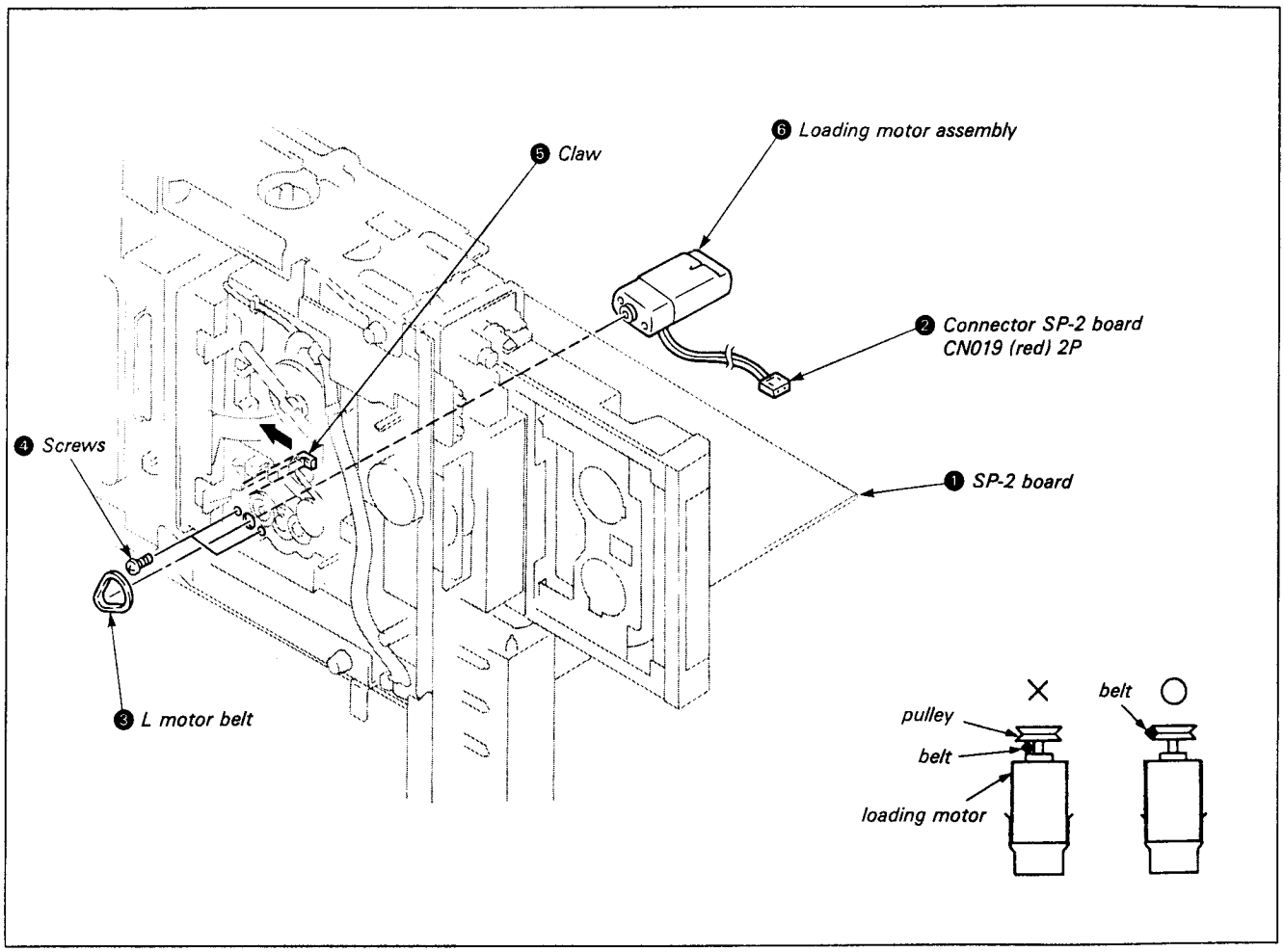


*Fig. 7-11.*

### 7-3-7. Loading Ring Assembly (See Fig. 7-12, 13.)

#### 1. Removal

1) Remove the mechanism as described in item Section 2, 2-15.
2) Remove the cassette compartment assembly according to item Section 2, 2-14.
3) Operate the mode selector, and move the guide base assembly ❶ until just before lock, and the entrance guide assembly ❷ until just before lock where the ring stopper ❸ screw is visible. (Do not move loading ring assembly ⓫.)
4) Remove the stopper washer ❹ and remove No. 10 gear assembly ❺.
5) Remove screw ❻ and the roller retainer ❼ and ring roller ❽.
6) Remove the two screws ❾ and the ring stopper ❸ and ring roller ❿.
7) Remove the loading ring assembly ⓫ as shown by arrow. (See Fig. 7-12.)

**Note:** Be careful that the loading ring assembly ⓫ does not touch the drum when it is removed.

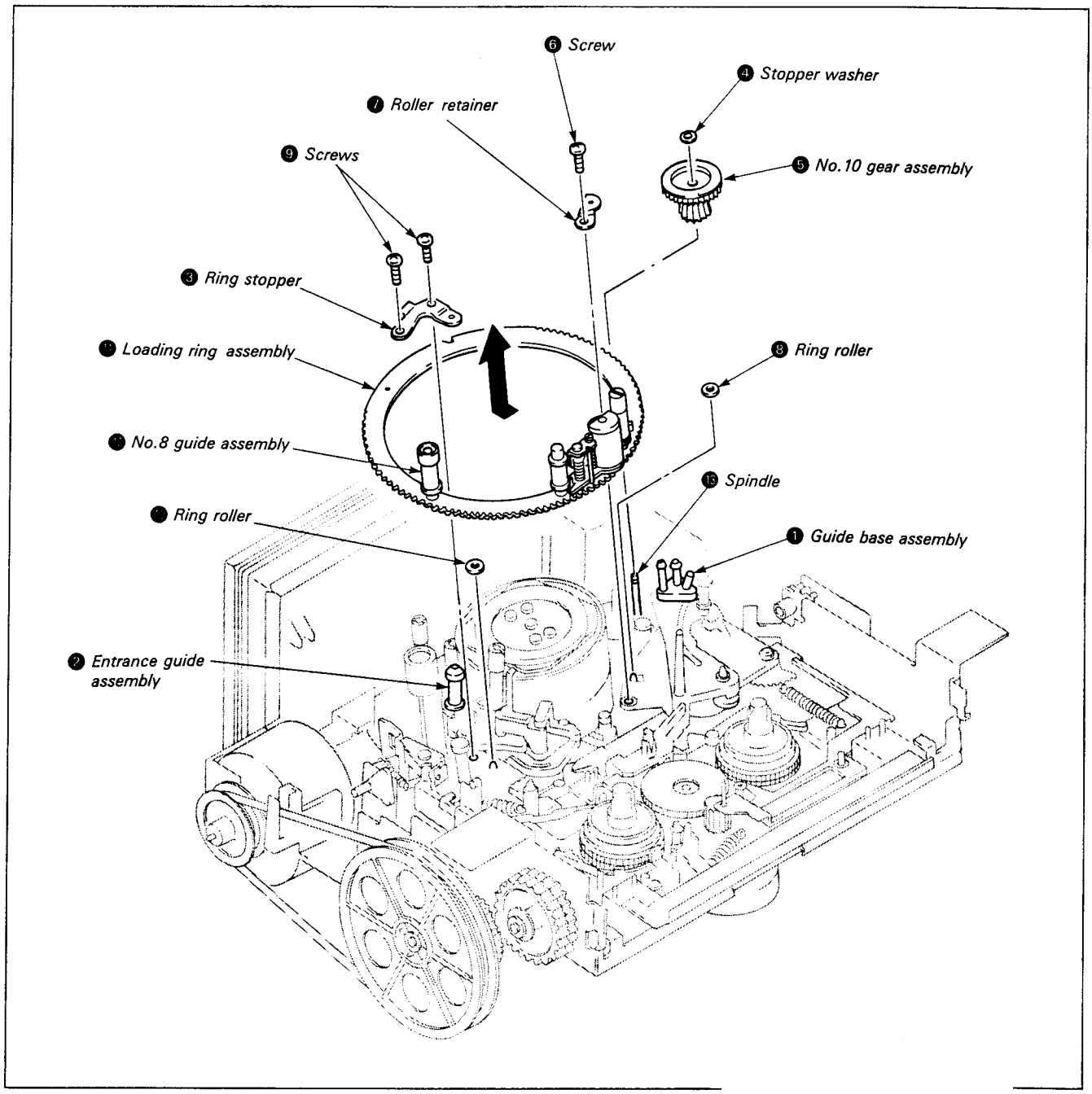


*Fig. 7-12.*

## 2. Mounting

1) Mount the loading ring assembly ⓫ so that it is in unthreaded state (pinch roller arm assembly is on the front panel side). (Check that is in the state in step 3) under Removal.)
2) Mount the ring roller ⓰ and ring stopper ❸ and tighten with the two screws ❾. (No. 8 guide assembly ⓫ should be closer to the front panel than the ring stopper ❸.)
3) Mount the ring roller ❽ and roller retainer ❼ and tighten with screw ❻. (Check that the loading ring assembly matches the three ring spacers.)
4) Place a half drop of oil on the spindle ⓭. (See Fig. 7-12.)
5) Check that the protrusions on the drive changer assembly are in the indentations of the L-SW assembly and insert the No. 10 gear phase jig (Ref. No. J-9). (See Fig. 7-13.)
6) Mount No. 10 gear assembly ❺ and stopper washer ❹ while pushing the No. 8 guide assembly ⓬ against the ring stopper ❸.
7) Pull out the No. 10 gear phase jig.
8) Set to [LOADING TOP] mode. (See Fig. 7-12.)
9) Mount the mechanism by following the procedure in Section 2, 2-15. in reverse.
10) Mount the cassette compartment assembly by following the procedure in item Section 2, 2-14. in reverse.

**Note:** Be sure to perform 7-4. Tape Path Adjustment after mounting.

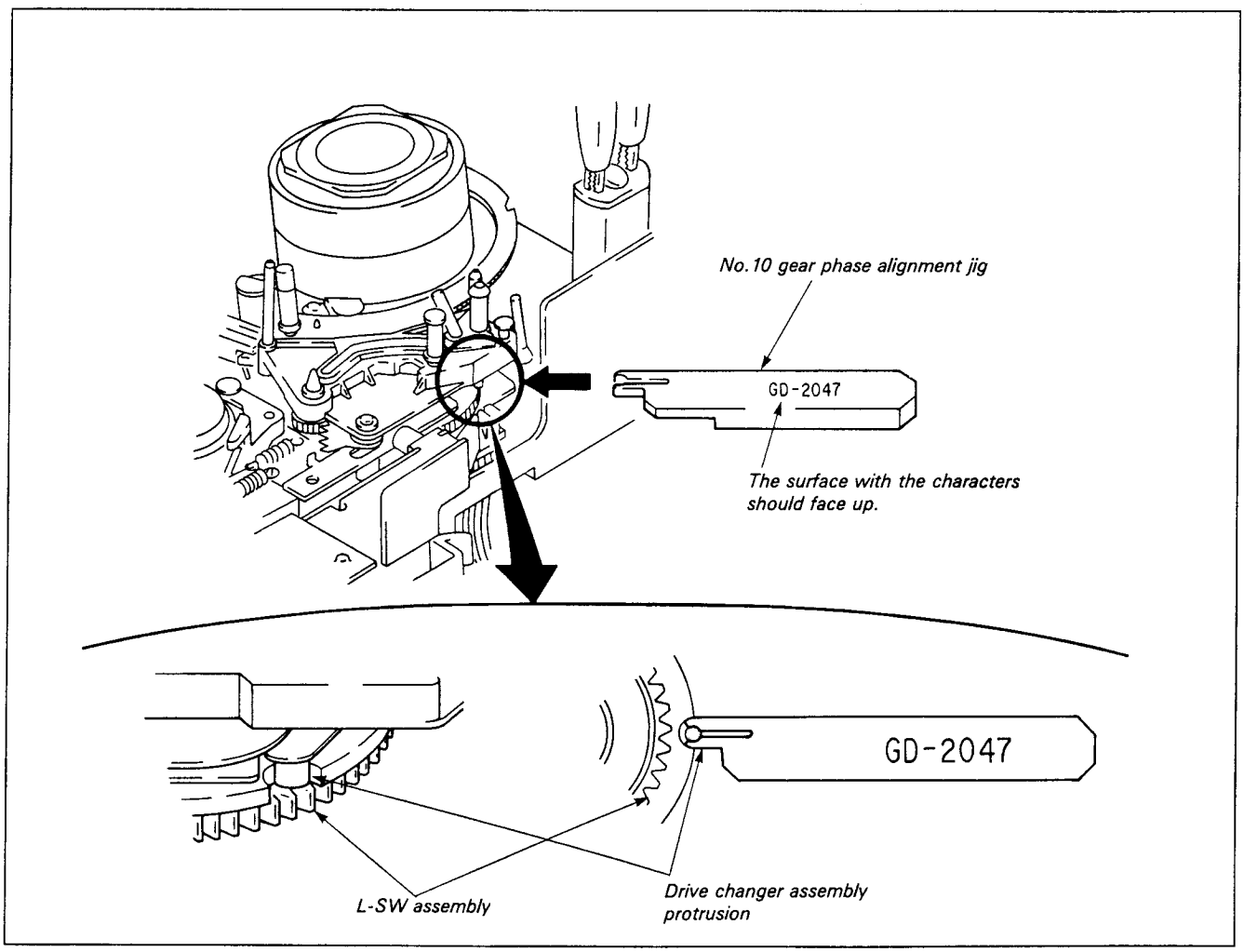


*Fig. 7-13.*

### 7-3-8. Pinch Roller Assembly (See Fig. 7-14. ~ 25.)

#### 1. Removal

1) Remove the loading ring assembly as described in 7-3-7., 1. Removal. (See Fig. 7-12.)
2) Remove stopper washer ❶. (See Fig. 7-14.)
3) Change the position of the torsion spring ❸ on No. 7 guide assembly ❷. (See Fig. 7-15.)
4) Rotate pinch roller arm assembly ❹ in the direction of arrow. (See Fig. 7-16.)
5) Remove pinch roller arm assembly ❹ in the direction of arrow. (See Fig. 7-17.)
6) Remove torsion spring ❸. (See Fig. 7-18.)

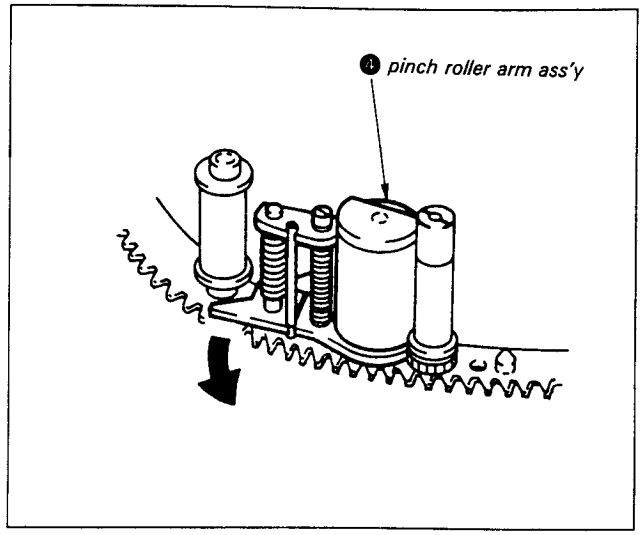


Fig. 7-16.

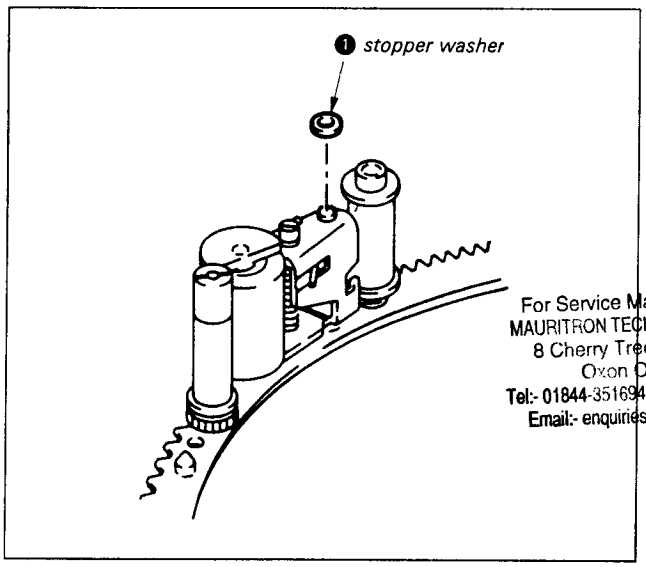


For Service Manuals Contact
MAURITRON TECHNICAL SERVICES
8 Cherry Tree Rd, Chinnor
Oxon OX9 4QY
Tel:- 01844-351694 Fax:- 01844-352554
Email:- enquiries@mauritron.co.uk

Fig. 7-14.

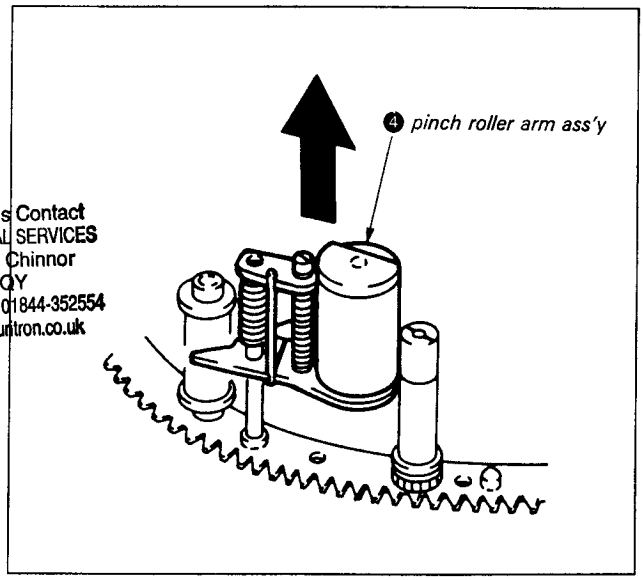


Fig. 7-17.

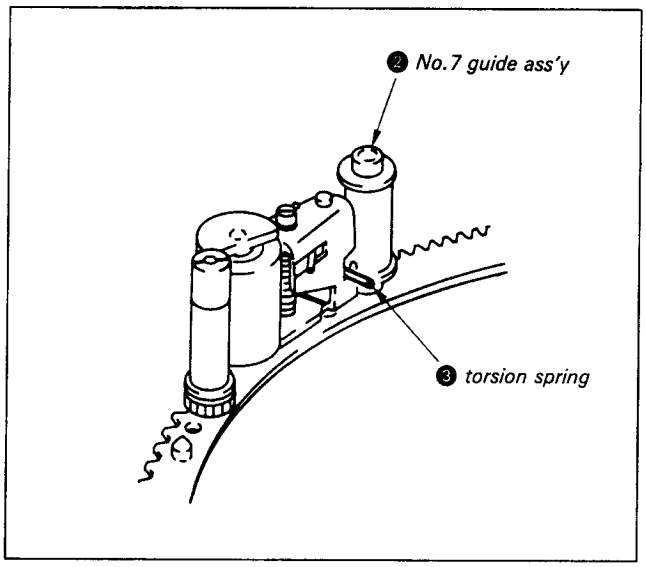


Fig. 7-15

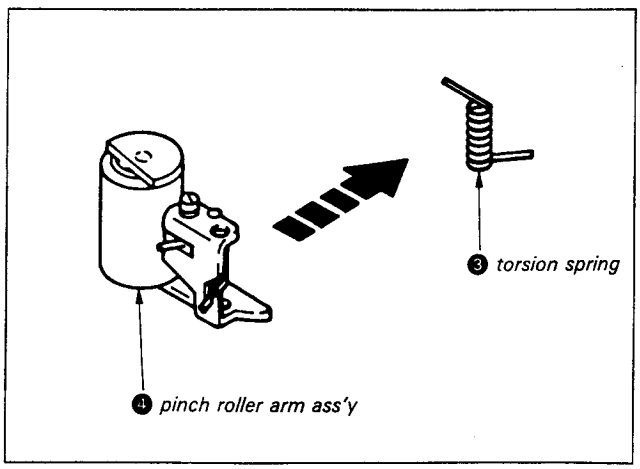


Fig. 7-18.

## 2. Mounting

1) Position torsion spring ❸. (See Fig. 7-19.)
2) Insert the end of a paper clip ❺ or other thin rod inside the pinch roller arm assembly hole ❻. (See Fig. 7-20, 7-21.)
3) Push the end of the clip ❺ through to contact the loading ring assembly shaft ❼ and mount the pinch roller arm assembly ❹. (See Fig. 7-22, 7-23.)
4) Place the spring on No. 7 guide assembly ❷. At this time, check that the spring is hooked on section Ⓐ. (See Fig. 7-24.)
5) Mount the stopper washer ❶. (See Fig. 7-25.)
6) Mount the loading ring assembly according to 7-3-7., 2. Mounting. (See Fig. 7-12, 7-13)

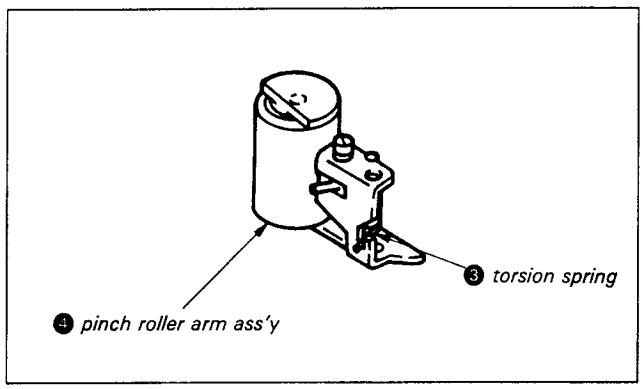


Fig. 7-19.

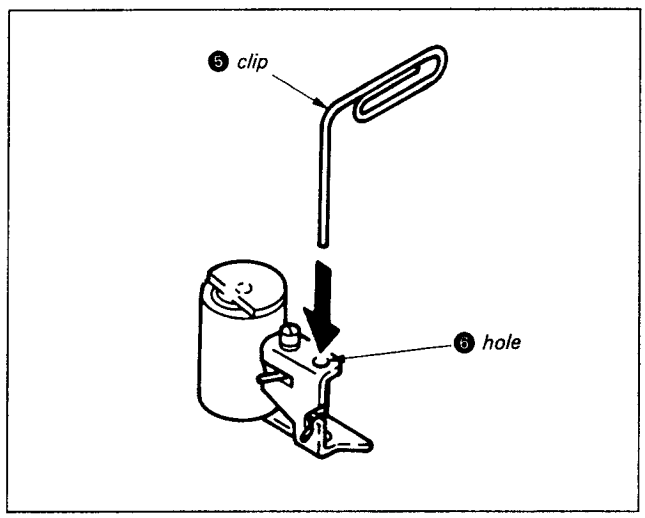


Fig. 7-20.

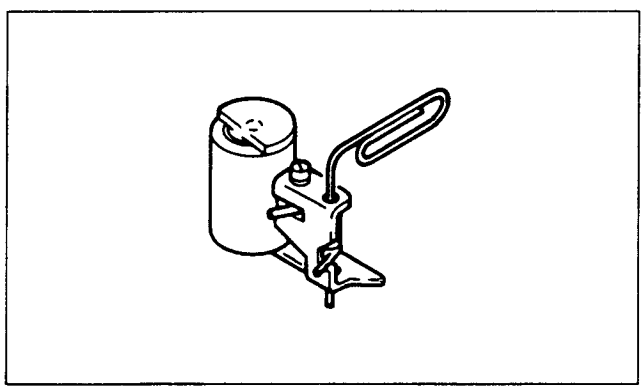

Fig. 7-21.

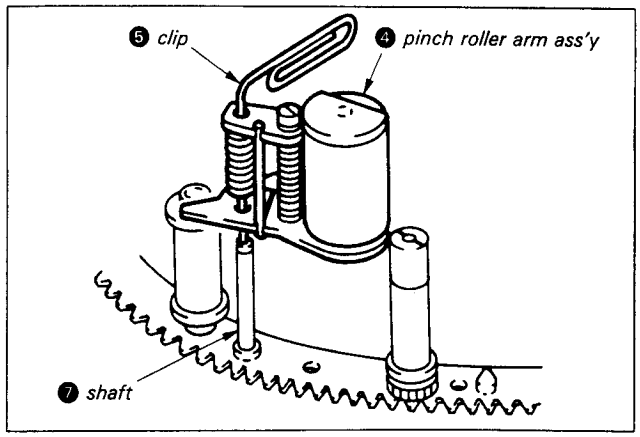


Fig. 7-22.

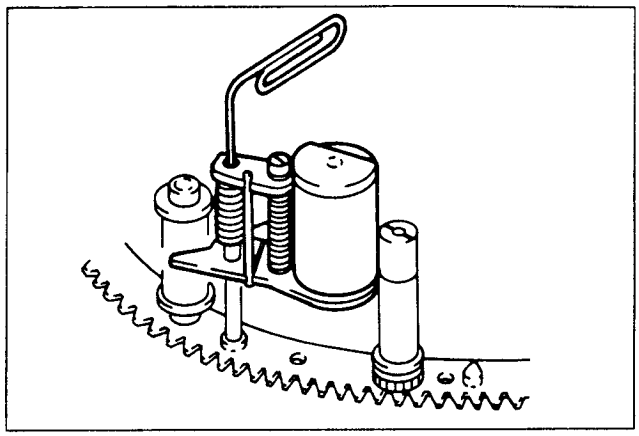

Fig. 7-23.

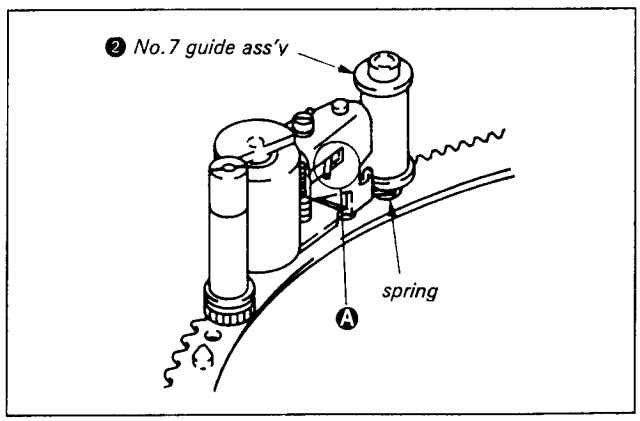


Fig. 7-24.

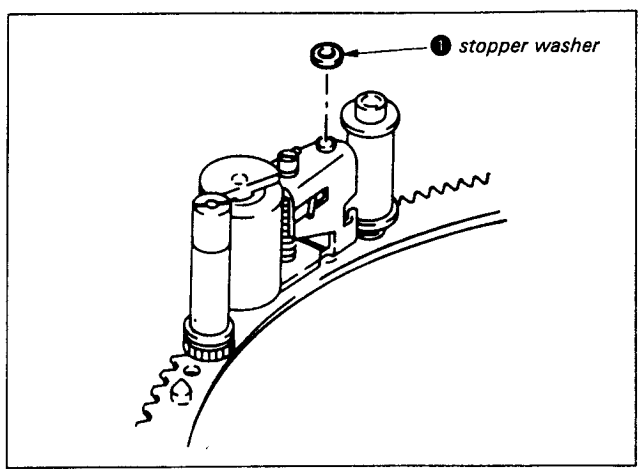


Fig. 7-25.

### 7-3-9. Slant Guide Assembly (See Fig. 7-26 ~ 28.)

#### 1. Removal

1) Remove the loading ring assembly according to 7-3-7., 1. Removal. (See Fig. 7-12.)
2) Remove screw ❶ and E ring ❷.
3) Remove the slant guide assembly ❸. (See Fig. 7-26.)

#### 2. Mounting

1) Operate the mode selector, and line up the right edge of the L slider assembly and the right edge of the lock slider assembly. (See Fig. 7-27.)
2) Set the slant guide assembly guide base assembly in unthreaded state (guide base assembly is on front panel side) and mount. (See Fig. 7-28.)

**Note:** At this time, confirm the engagement position of the slant guide drive gear and L slider assembly gear. (See Fig. 7-32.)

3) Mount the E ring ❷ and tighten screw ❶. (See Fig. 7-26.)
4) Put in the state in 7-3-7., 1. Removal, 3).
5) Mount the loading ring assembly according to 7-3-7., 2. Mounting (See Fig. 7-12, 7-13.)

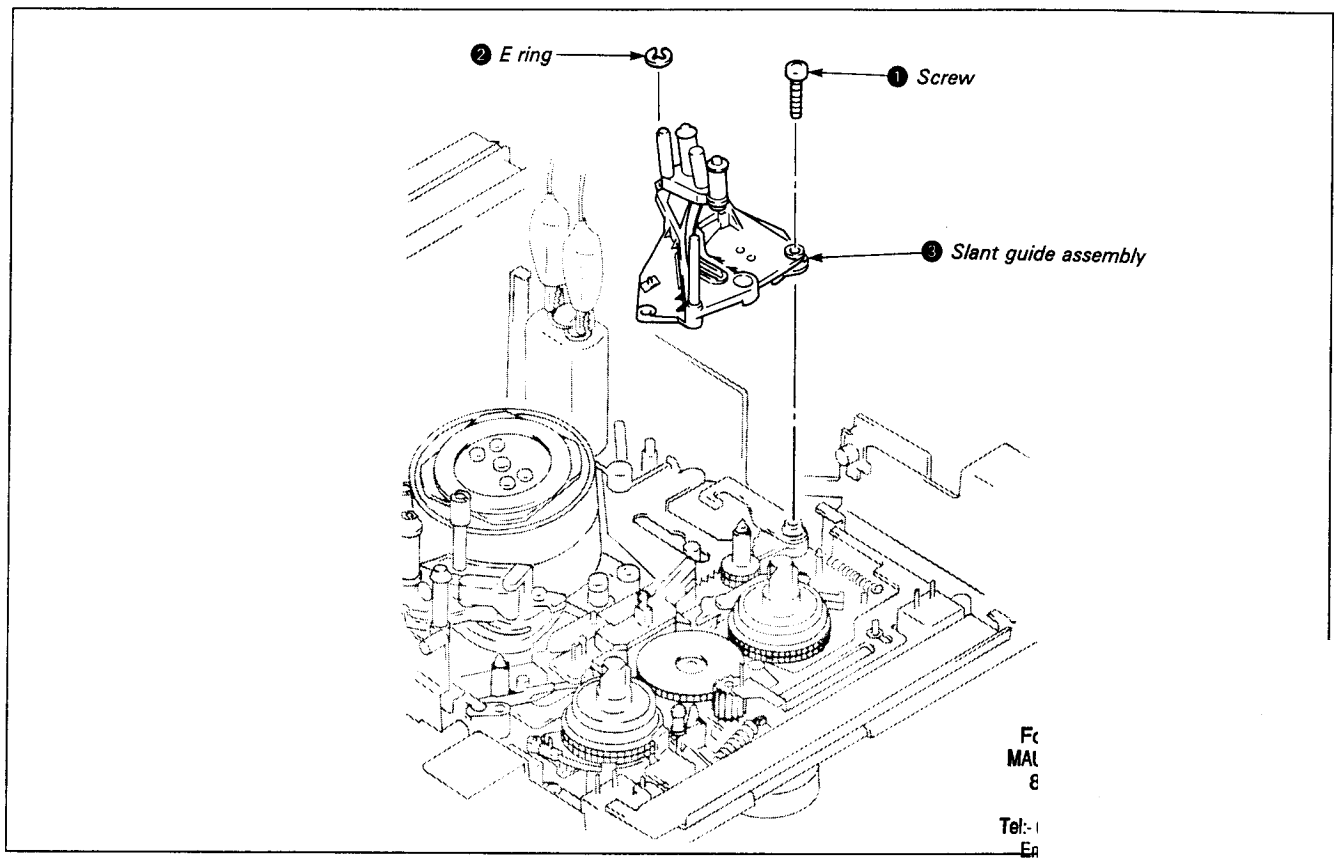


*Fig. 7-26.*

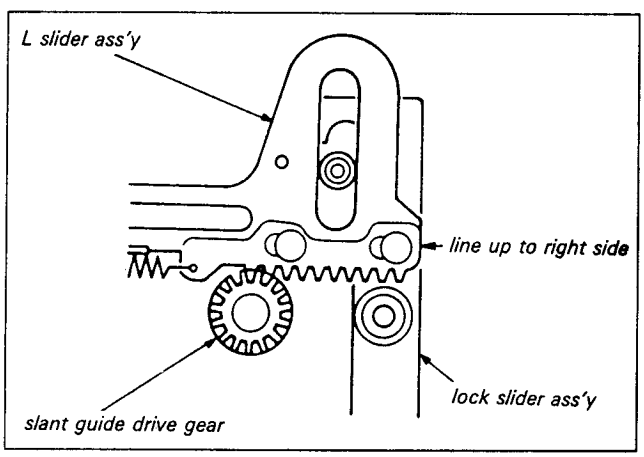


*Fig. 7-27.*

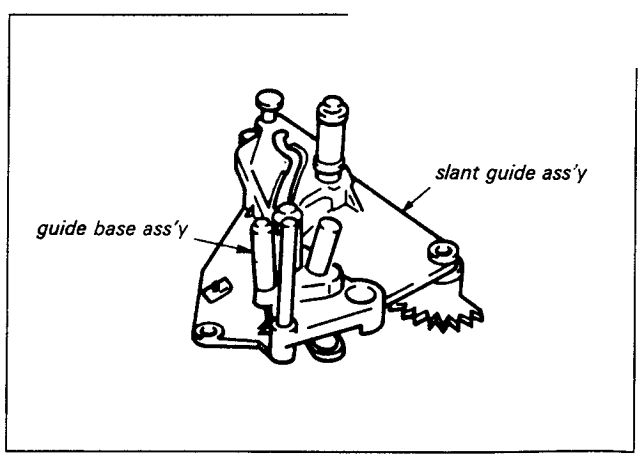


*Fig. 7-28.*

### 7-3-10. Entrance Guide (P) Assembly (No. 2 Guide Assembly) (See Fig. 7-29.)

#### 1. Removal

1) Remove the cassette compartment assembly according to item Section 2, 2-14.
2) Turn the rotary upper drum counterclockwise and separate the head portion from the entrance guide (P) assembly ❶.
3) Remove the two screws ❷.
4) Remove No. 3 guide nut ❸, and remove guide flange ❹, guide ❺ and compression spring ❻.
5) Remove the entrance guide assembly ❶.

#### 2. Mounting

1) Engage the entrance guide (P) assembly and L slider assembly so that the part without teeth Ⓐ on the bottom of the entrance guide (P) assembly and the part without teeth Ⓑ on the L slider assembly match.
2) Mount the compression spring ❻, guide ❺ and guide flange ❹ in that order, then temporarily tighten the guide nut ❸.
3) Tighten the two screws ❷.
4) Mount the cassette compartment assembly by following the procedure in item Section 2, 2-14. in reverse.

**Note:** Be sure to perform 7-4. Tape Path Adjustment after mounting.

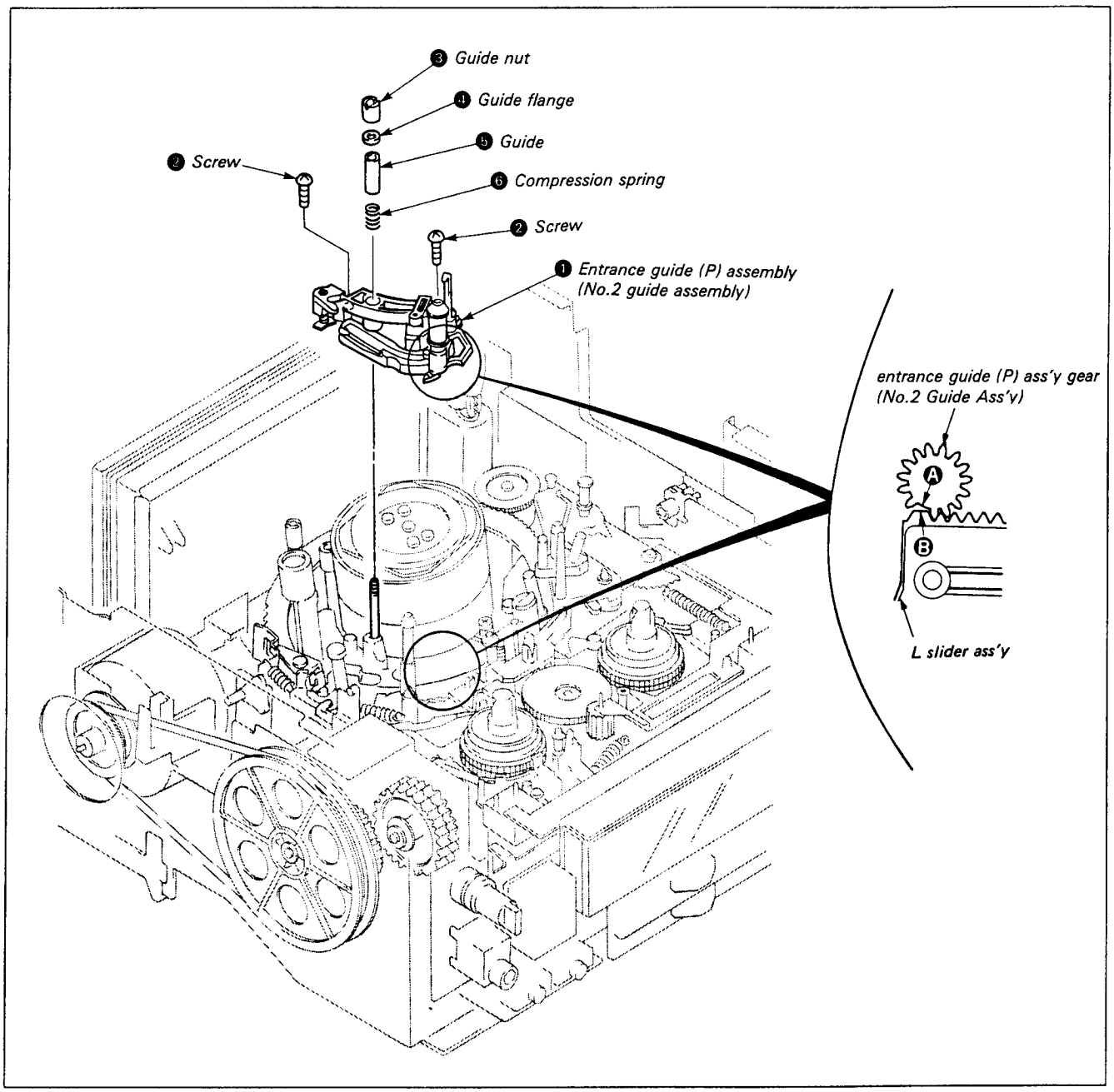


*Fig. 7-29.*

### 7-3-11. L Slider Assembly (See Fig. 7-30. ~32.)

#### 1. Removal

1) Remove the slant guide assembly according to 7-3-9., 1. Removal.
2) Remove the entrance guide (P) assembly according to 7-3-10., 1. Removal.
3) Set to DRUM START mode.
4) Remove slant guide drive gear ❶.
5) Remove the tension regulator load arm assembly ❷ pin from the cam groove of the tension regulator arm assembly. (Refer to 7-3-4. Tention Regulator Arm Assembly.)
6) Remove the two stopper washers ❸.
7) Remove the L slider assembly ❺ while pushing the RL arm assembly protrusion ❹ in the direction of arrow.
8) Remove the stopper washer ❻ and the tension regulator load arm assembly ❷.

#### 2. Mounting

1) Lubricate the portions indicated in Fig. 7-31.
2) Mount the tension regulator load arm assembly ❷ and the stopper washer ❻.
3) Mount the L slider assembly ❺ while pushing the RL arm assembly protrusion ❹ in the direction of arrow.
4) Put the tension regulator load arm assembly ❷ pin into the M slider groove. (Refer to 7-3-15. M slider)
5) Mount the two stopper washers ❸.
6) Refer to 3-4, 2. Mounting, 2), and place the tension regulator load arm assembly ❷ pin in the tension regulator arm assembly cam groove.
7) Operate the mode selector, and match up the right edge of the L slider assembly and the right edge of the lock slider assembly. (Refer to 7-3-9, 2. Mounting, 1)
8) Engage the slant guide drive gear so that the notch is 1 tooth away from the L slider assembly left side tooth. (See Fig. 7-32.)
9) Mount the entrance guide (P) assembly according to 7-3-10., 2. Mounting.
10) Mount the slant guide assembly according to 7-3-9., 2. Mounting.

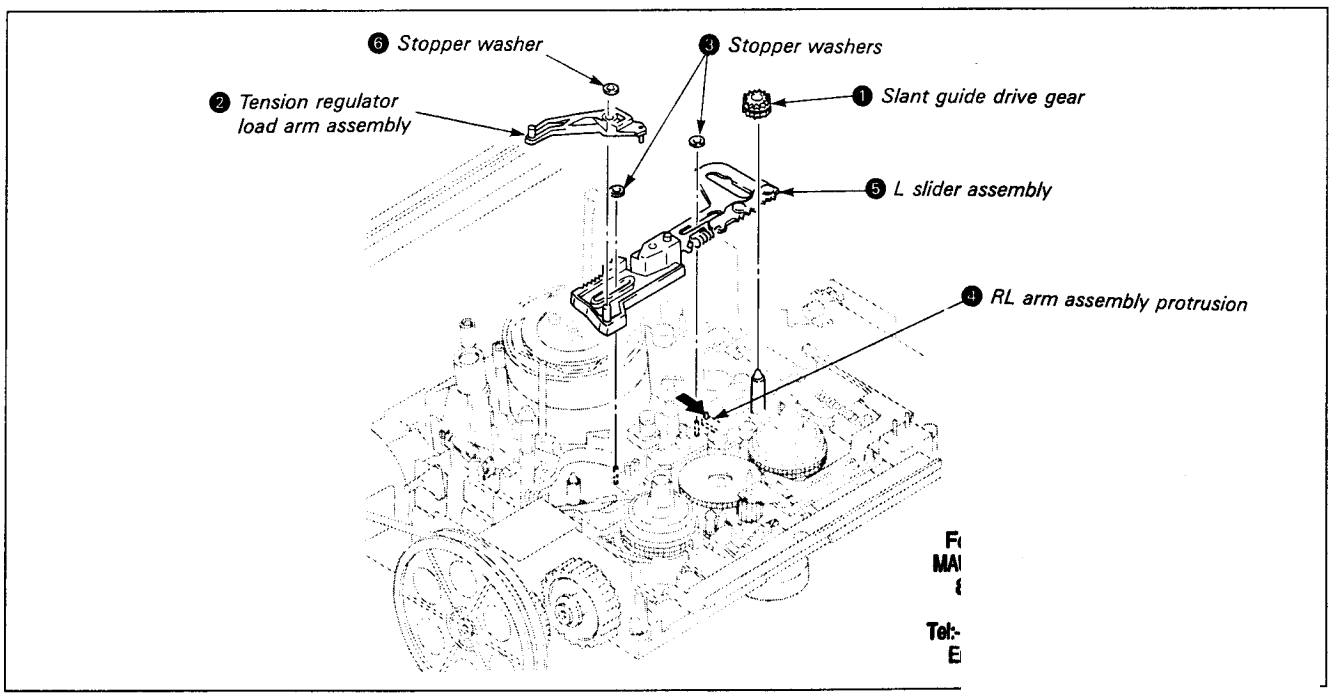


Fig. 7-30.

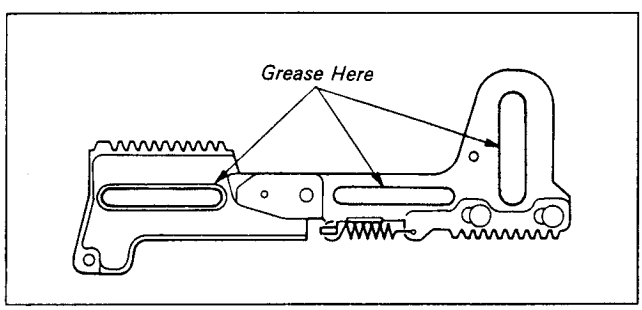


Fig. 7-31.

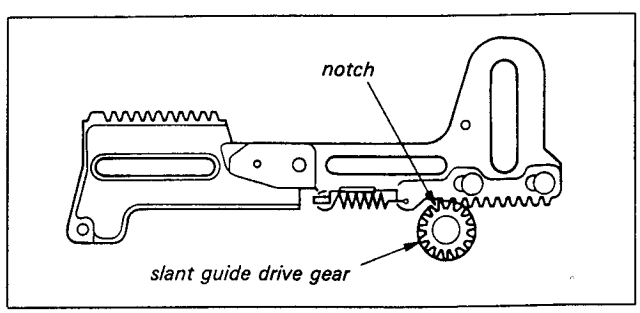


Fig. 7-32.

### 7-3-12. L-SW Assembly (See Fig. 7-33 ~ 35.)

#### 1. Removal

1) Remove the L slider assembly according to 7-3-11., 1. Removal.
2) Remove lock slider retainer ❶.
3) Remove screw ❷ and lock slider A ❸.
4) Remove stopper washer ❹ and torsion spring ❺.
5) Remove drive changer assembly ❻.
6) Remove connector ❼.
7) Remove the two screws ❽ and the L-SW assembly ❾.

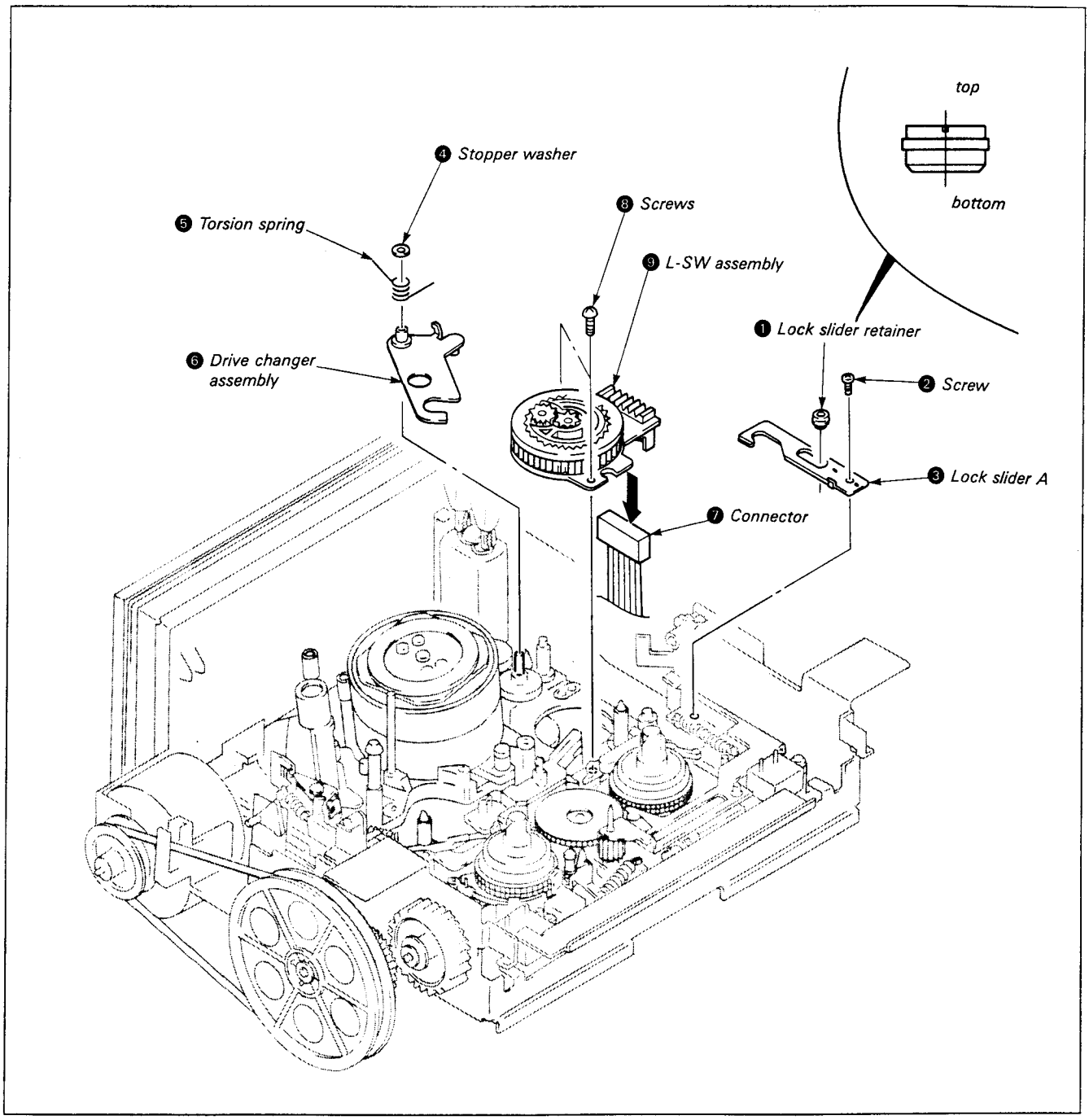


*Fig. 7-33.*

## 2. Mounting

1) Place a half drop of oil on the L-SW assembly ❾ spindle (planetary gear).
2) Mount L-SW assembly ❾ and tighten with the two screws ❽.
3) Connect connector ❼.
4) Operate the mode selector and check that the L-SW assembly ❾ rotates.
5) Place a half drop of oil on spindle ❿.
6) Grease the drive change assembly ❻ as shown in Fig. 7-34.
7) Mount the drive changer assembly ❻.
8) Mount the torsion spring ❺ and the stopper washer ❹.
9) Operate the mode selector and check that the L-SW assembly ❾ rotates.
10) Mount lock slider A ❸ and tighten screw ❷.
11) Mount lock slider retainer ❶.
12) Operate the mode selector and set to the position in Fig. 7-35.
13) Mount the L slider assembly according to 7-3-11., 2, Mounting.

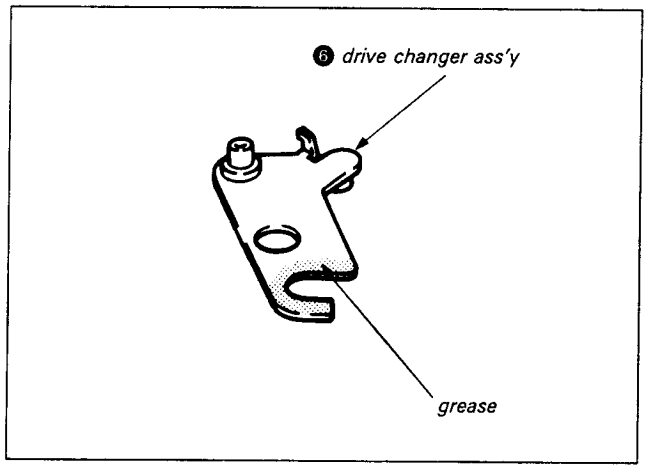


*Fig. 7-34.*

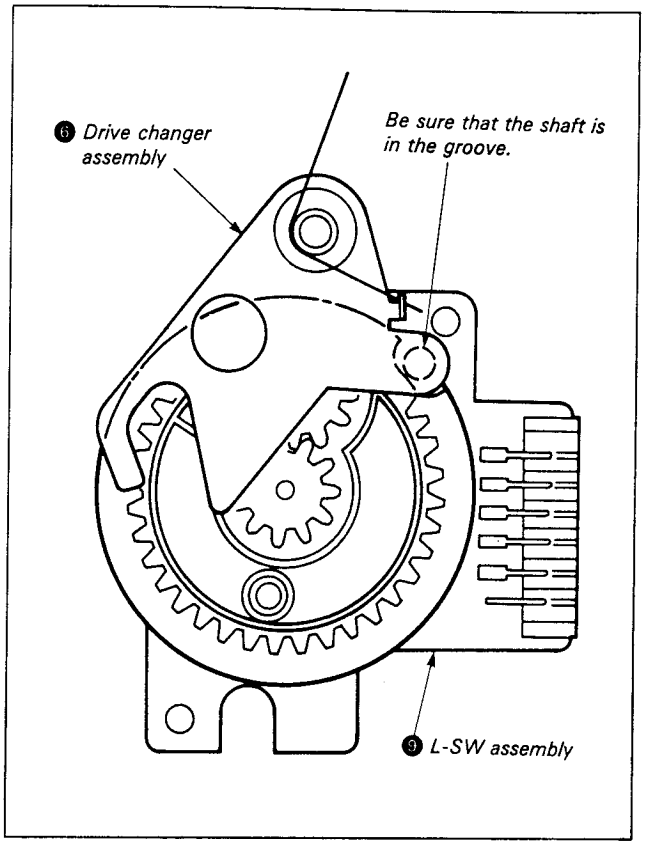


*Fig. 7-35.*

### 7-3-13. Plunger Solenoid (See Fig. 7-36.)

#### 1. Removal

1) Open the SP-2 board according to Section 2, 2-6. and remove connector CN018 (white) 3P.
2) Remove the cassette compartment assembly according to Section 2, 2-14.
3) Remove tension spring ❶.
4) Remove the two stopper washers ❷.
5) Remove screw ❸ and the lock slider B assembly ❹.
6) Remove the two screws ❺ and the plunger solenoid ❻. (At this time, be careful not to scratch the T reel assembly with the screwdriver, and do not touch it.)

#### 2. Mounting

1) Insert the plunger solenoid pin ❼ into the P arm hole ❽ and mount with the two screws ❺. (Again, be careful not to scratch or touch the T reel assembly.)
2) Mount lock slider B assembly ❹ and tighten screw ❸.
3) Mount the two stopper washers ❷.
4) Hook on the tension spring ❶.
5) Mount the cassette compartment assembly by following the procedure in item Section 2, 2-14. in reverse.
6) Connect the CN018 connector (white) to the SP-2 board.
7) Mount the SP-2 board by following the procedure in Section 2, 2-6. in reverse.

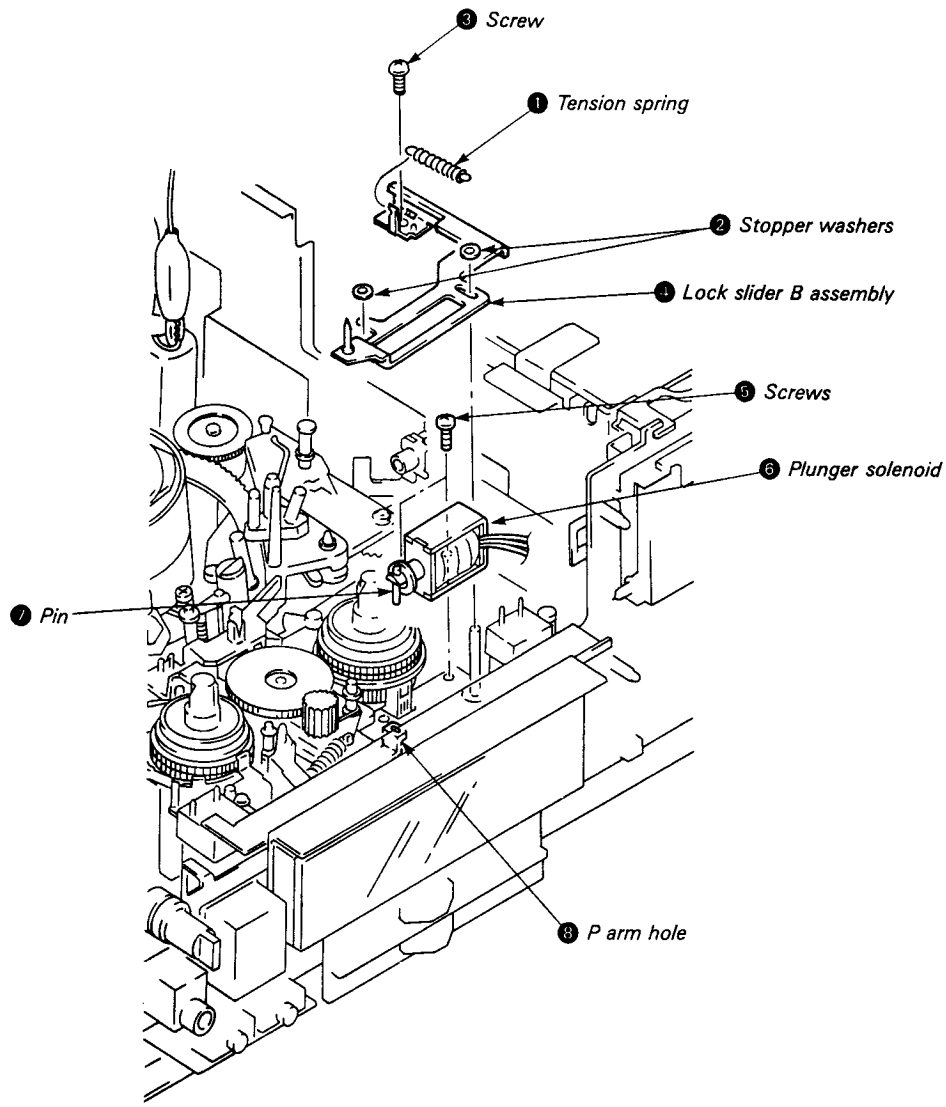


*Fig. 7-36.*

### 7-3-14. M-SW Assembly (See Fig. 7-37~39)

#### 1. Removal

1) Remove the T reel assembly according to 7-3-2. (See Fig. 7-7.)
2) Remove stopper washer ❶ and the drive gear (B) assembly ❷.
3) Remove the LD-1 board ❸. (See Fig. 7-37.)
4) Remove lock slider B assembly according to 7-3-13., 1. Removal, 3), 4) and 5).
5) Remove tension spring ❹ and B release arm ❺.
6) Check [EJECT] mode.
7) Remove stopper washer ❻ and the mode output gear ❼.
8) Remove screw ❽ and the push switch ❾.
9) Remove connector ❿.
10) Remove the three screws ⓫, the control motor cover ⓬ and the M-SW assembly ⓭.
11) Remove solder Ⓐ and remove the DC motor ⓮.

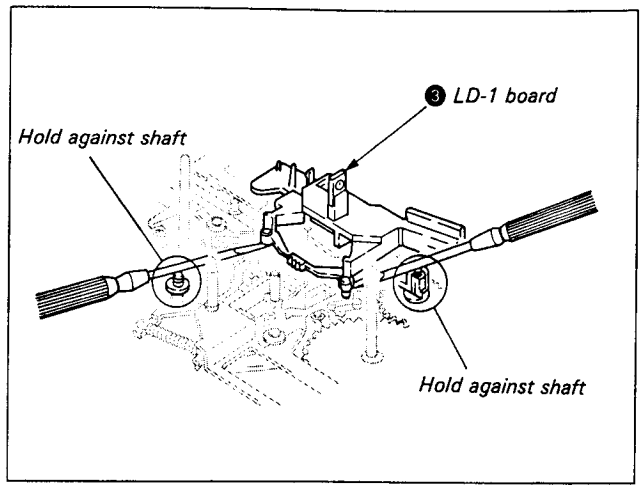


Fig. 7-37.

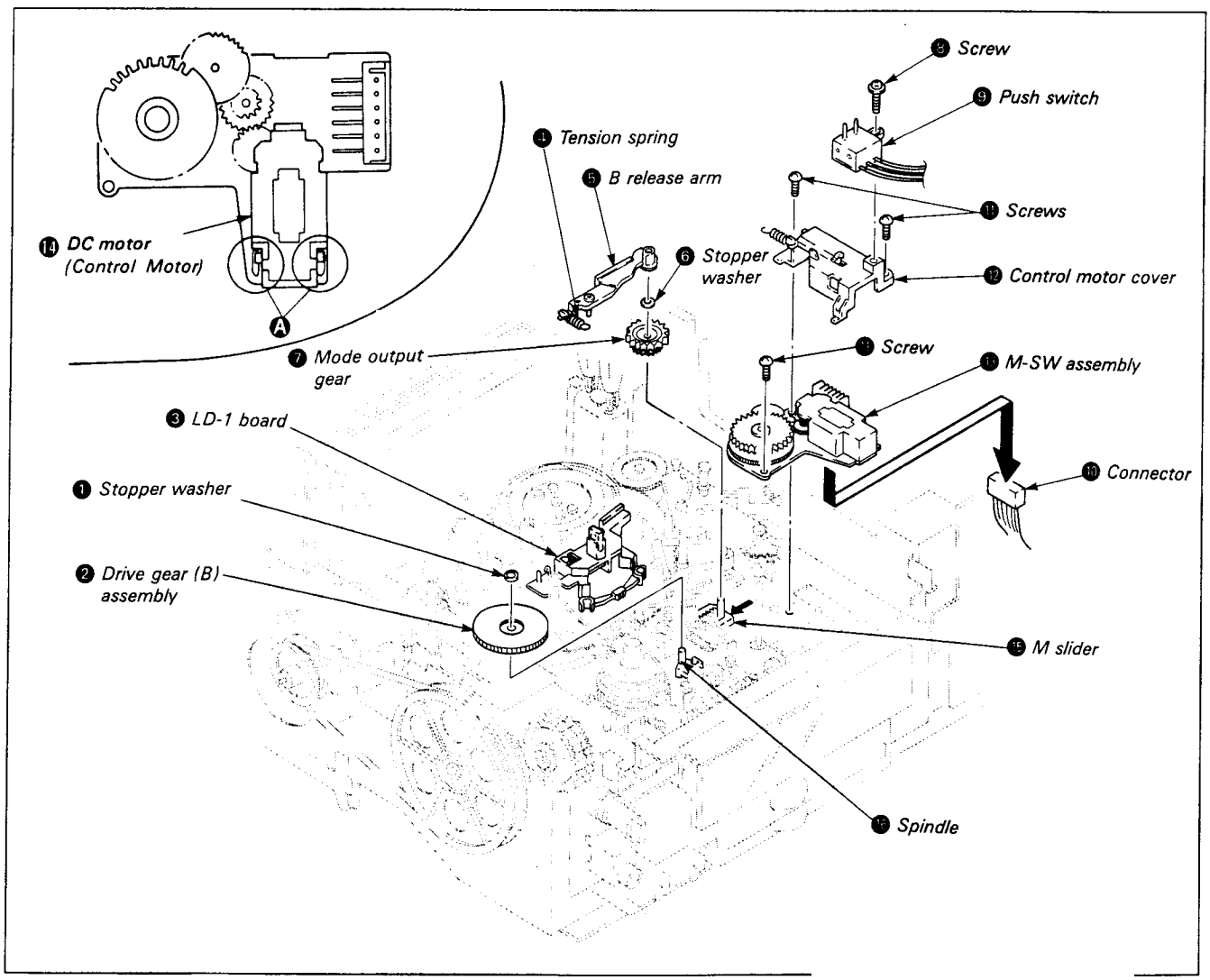


Fig. 7-38.

## 2. Mounting

1) Solder the DC motor (Control Motor) ⓮.
2) Mount the M-SW assembly ⓭ and the control motor cover ⓬, and tighten the three screws ⓫.
3) Connect connector ⓾.
4) Mount push switch ❾ and tighten screw ❽.
5) Check [EJECT] mode.
6) Check that M slider ⓯ is moved fully in the direction of arrowⒷ.
7) Place a half drop of oil on spindle ⓰. (See Fig. 7-38.)
8) Mount the mode output gear ❼ so that the positioning holes are lined up. (See Fig. 7-39.)
9) Mount stopper washer ❻.
10) Set to [LOADING/UNLOADING] mode.
11) Mount B release arm ❺ and tension spring ❹.
12) Mount the lock slider B assembly according to 7-3-13., 2. Mounting, 2), 3) and 4).
13) Mount the LD-1 board ❸.
14) Mount drive gear B assembly ❷ and stopper washer ❶.
15) Mount the T reel assembly according to 7-3-2., Mounting.

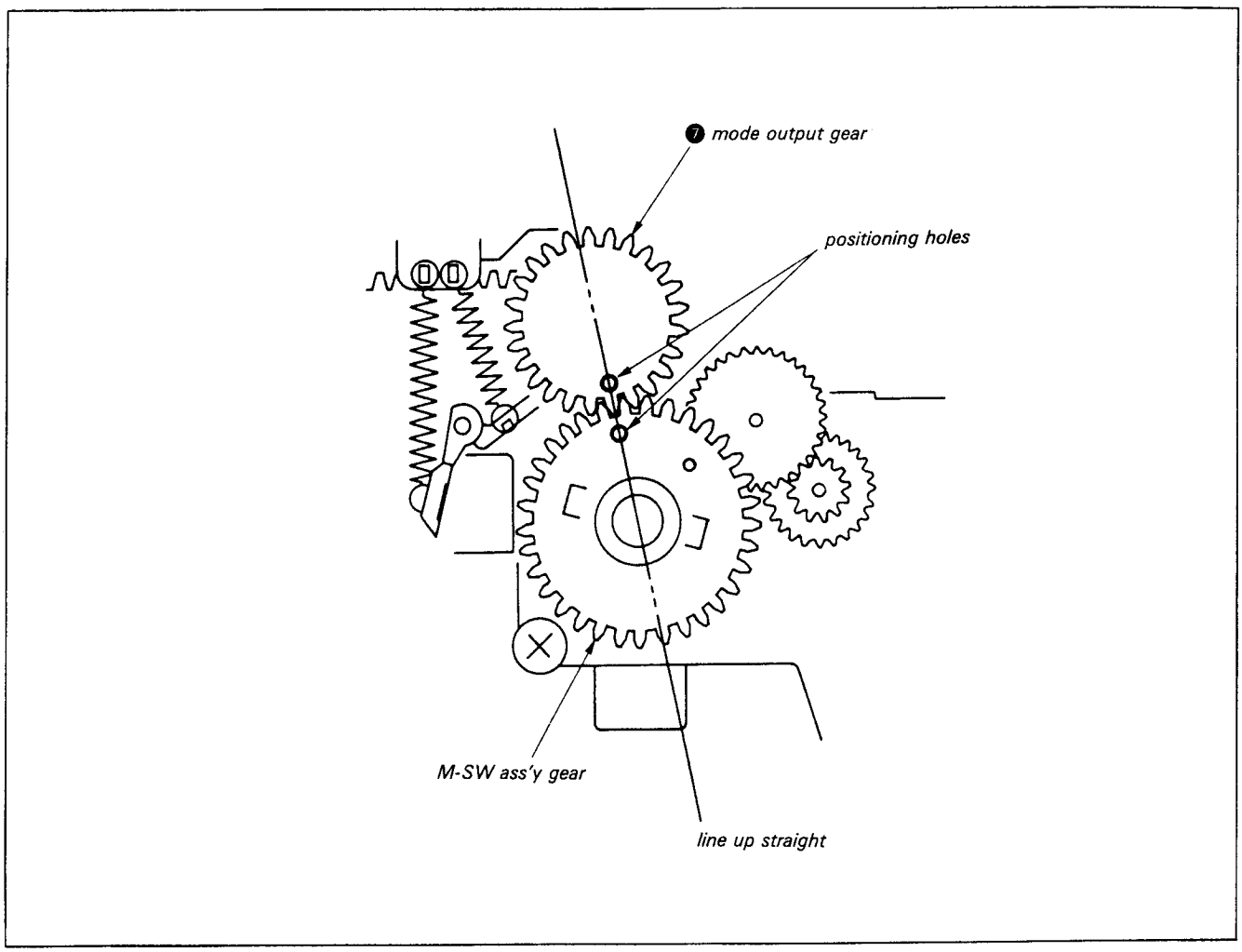


*Fig. 7-39.*

### 7-3-15. M Slider (See Fig. 7-40 ~43.)

#### 1. Removal

1) Remove the pinch press arm assembly according to 7-3-3., 1. Removal. (See Fig. 7-8.)
2) Remove the tension regulator arm assembly according to 7-3-4., 1. Removal. (See Fig. 7-9.)
3) Remove the tension regulator band assembly according to 7-3-5., 1. Removal. (See Fig. 7-10.)
4) Remove the loading ring assembly according to 7-3-7., 1. Removal. (See Fig. 7-12.)
5) Perform 7-3-14., 1. Removal, Steps 1)~5). (See Fig. 7-37, 7-38.)
6) Remove the tension regulator load arm assembly according to 7-3-11., 1. Removal, 8). (See Fig. 7-30.)
7) Remove tension spring ❶.
8) Remove the two stopper washers ❷ and remove the S main brake assembly ❸ and T main brake assembly ❹.
9) Set to [LOADING TOP], [LOADING/UNLOADING] mode.
10) Remove the screw ❺ and the drive assembly ❻.
11) Perform 7-3-14., 1. Removal, steps 6) and 7).
12) Remove the two tension springs ❼.
13) Remove REW brake assembly ❽.
14) Remove stopper washer ❾ and B release slider ❿.
15) Remove stopper washer ⓫ and ring lock spring ⓬ and RL arm ⓭.
16) Move the M slider ⓮ to the right (leave about 5 mm at the left.)
17) Remove the E ring ⓯ and the pinch press lever assembly ⓰.
18) Remove spring ⓱ and the hard brake (S) ⓲.
19) Remove stopper washer ⓳, push the mode arm ㉑ in the direction of arrow, and lift up the left side of the M slider ⓮ to remove.

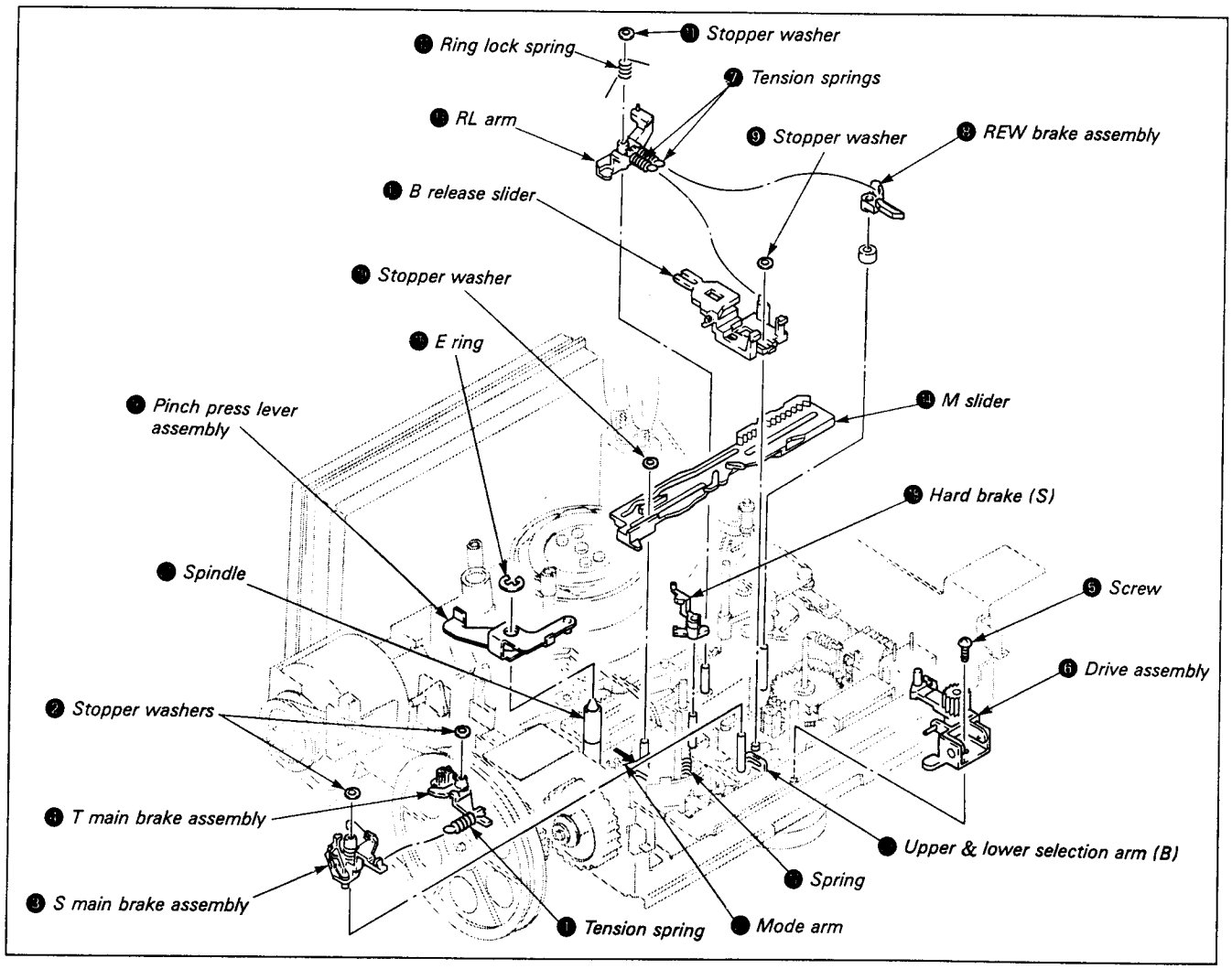


*Fig. 7-40.*

## 2. Mounting

1) Apply grease. (See Fig. 7-41.)
2) Push mode arm ⓴ in the direction of arrow, and mount the M slider ⓫, noticing the positioning of the other parts in Fig. 7-42. and mount the stopper washer ⓮.
3) Mount hard brake (S) ⓯ and spring ⓱.
4) Apply grease. (See Fig. 7-43.)
5) Apply a half drop of oil from the spindle ㉑ groove to the bottom, mount the pinch press lever assembly ⓰ and the E ring ⓯.
6) Mount RL arm ⓭, mount the ring lock spring ⓬ and the stopper washer ⓫.
7) Mount B release slider ⓾ and stopper washer ❾.
8) Mount REW brake assembly ❽.
9) Mount the two tension springs ❼.

**Note:** Mount the springs as follows, being careful not to mix them up.
- B release slider spring: total diameter 2 mm, wire diameter 0.18 mm
- REW brake assembly spring: total diameter 1.6 mm, wire diameter 0.12 mm

10) Push the M slider ⓫ all the way to the left.
11) Perform 7-3-14., 2. Mounting, steps 7), 8) and 9).
12) Set to LOADING/UNLOADING mode.
13) Insert the drive assembly ❻ horizontal shaft into the upper & lower selection arm (B) ㉒ groove, and mount with the screw ❺.
14) Mount T main brake assembly ❹ and S main brake assembly ❸. Mount the two stopper washers ❷ and the tension spring ❶.
15) Mount the tension regulator load arm assembly according to 7-3-11., 2. Mounting, step 2).
16) Perform 7-3-14., 2. Mounting, steps 11)~15).
17) Mount the loading ring assembly according to 7-3-7., 2. Mounting.
18) Mount the tension regulator band assembly according to 7-3-5., 2. Mounting.
19) Mount the tension regulator arm assembly according to 7-3-4., 2. Mounting.
20) Mount the pinch press arm assembly according to 7-3-3., 2. Mounting.

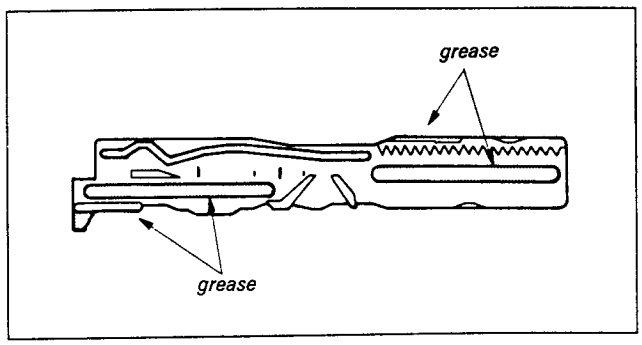

*Fig. 7-41.*

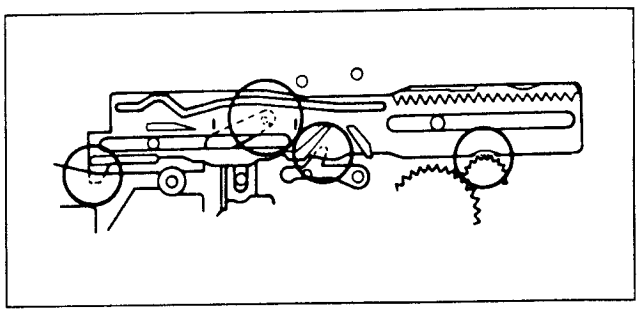
*Fig. 7-42.*

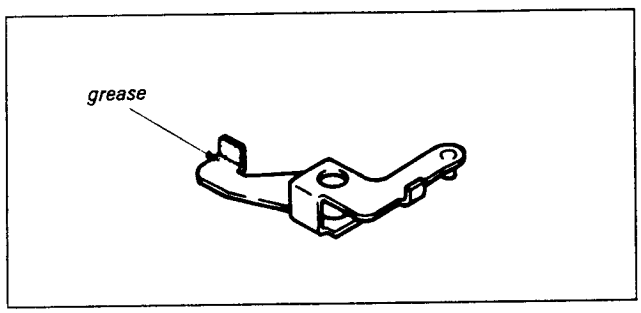

*Fig. 7-43.*

### 7-3-16. Capstan Motor (See Fig. 7-44.)

#### 1. Removal

1) Remove the loading ring assembly according to 7-3-7., 1. Removal. (See Fig. 7-12.)
2) Open the SP-2 board according to Section 2, 2-6.
3) Remove the connector ❶ (CN212, white, 11P) from SP-2 board.
4) Remove the connector ❷ (CN005, white, 4P) from RS-17 board.
5) Remove the two screws ❸ and rotor retainer ❹.
6) Remove the two screws ❺ and remove the capstan motor ❻ in the direction of arrow.

#### 2. Mounting

1) Mount capstan motor ❻ and tighten the two screws ❺.
2) Mount the rotor retainer ❹ and tighten the two screws ❸.
3) Connect connectors ❶ and ❷.
4) Mount the loading ring assembly according to 7-3-7., 2. Mounting. (See Fig. 7-12, 7-13.)
5) Mount the SP-2 board by performing the procedure in Section 2, 2-6. in reverse.

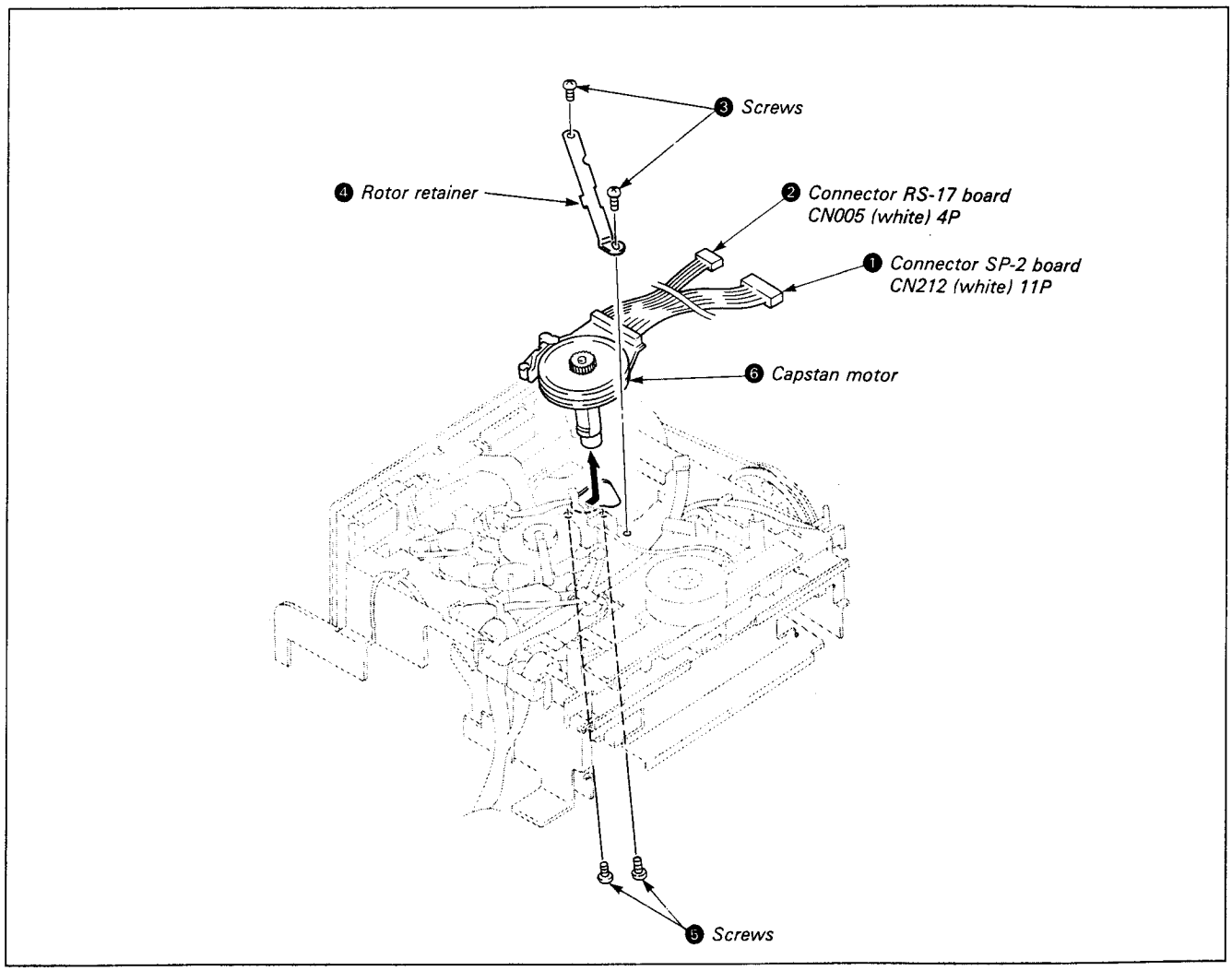


*Fig. 7-44.*

## 7-3-17. Rotary Upper Drum Replacement

### 1. Removal

1) Remove two hexagon socket screws (2 × 2.7) ❶ and dismount the dynamic damper ❷. (See Fig. 7-45.)
2) Suction solder at all of the soldered eight positions Ⓐ. Check that the printed wiring board and pins jutting out from below freely moove using tweezers, or other tool. (See Fig. 7-45.)
3) Remove the two hexagon socket screws (2 × 5) ❸. (See Fig. 7-45.)
4) Mount the dismounting Jig Ⓑ with the accessory screws ❹ utilizing the screw holes in which the dynamic damper was mounted.
   Drive the hexagon socket screw ❺ into the jig Ⓑ and remove the rotary upper drum ❻. (See Fig. 7-46.)

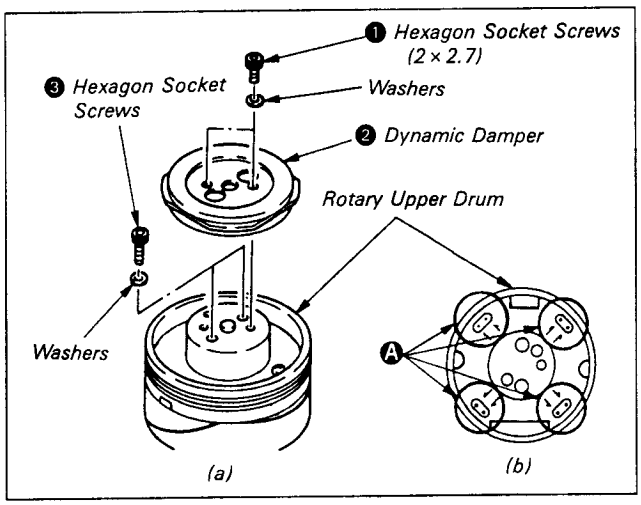


Fig. 7-45.

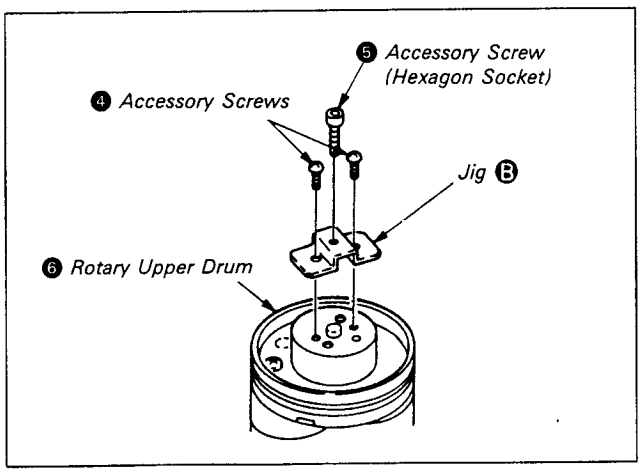


Fig. 7-46.

### 2. Mounting

| Rotary Upper Drum | Part No. |
|---|---|
| DGR-12-R | A-7049-120-A |

1) Carefully clean the flange surfaces and planes of the rotary upper drum and visually check that no blemishes or flaws are left.
2) Insert Jig Ⓒ in the positioning hole Ⓓ so that the holes of the rotary upper drum ❻ and flange coincide. Lightly insert the rotary upper drum in the drum shaft while aligning their positions. (See Fig. 7-47.) (Check that pins are projecting above the holes on the printed circuit board of the rotary upper drum. When the pins are caught, correct using tweezers, etc.)
3) Remove Jig Ⓒ, lightly push the rotary upper drum by hands. If the rotary upper drum does not go in to the bottom, alternately tighten the two hexagon socket screws (2 × 5) ❸ by hand and fix them temporarily. (See Fig. 7-45, 7-48.)
4) Reinsert the Jig Ⓒ in the positioning hole Ⓓ and check that the jig can be inserted smoothly. (When the jig cannot be inserted, loosen the two hexagon socket screws (2 × 5) ❸ and slide it inserting a clock screw-driver in the hole.)
5) Tighten the two hexagon socket screws (2 × 5) ❸.

**Note:** Do not tighten too strongly.

6) Solder the eight positions Ⓐ. (See Fig. 7-45.)

**Note:** Be careful not to flow solder below the printed wiring board.

7) Tighten the two hexagon socket screws (2 × 2.7) ❶ reversing the screw removal procedure and remount the dynamic damper ❷. (See Fig. 7-45.)

**Note:** Be careful not to tighten too strongly.
When mounting, be careful not to mix the hexagon socket screws (2 × 2.7) ❶ and hexagon socket screws (2 × 5) ❸.

**Note:** After mounting, be sure to perform 7-4. Tape Path Adjustment.

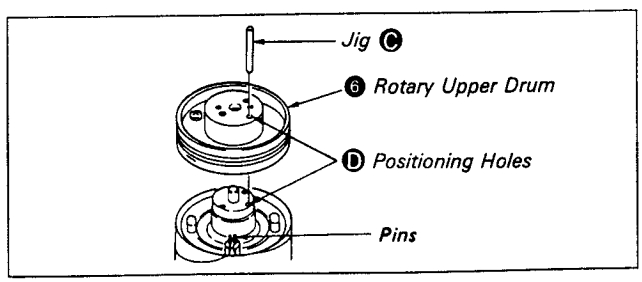


Fig. 7-47.

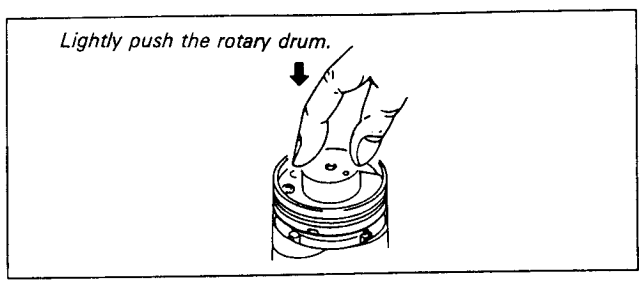


Fig. 7-48.

## Notes on Drum Assembly and Rotary Upper Drum Mounting

1. When mounting the drum assembly with a magnetized screwdriver, mount with the head tip in the position shown below to prevent it from being affected by the screwdriver.
2. Be sure to perform tape path adjustment after mounting.

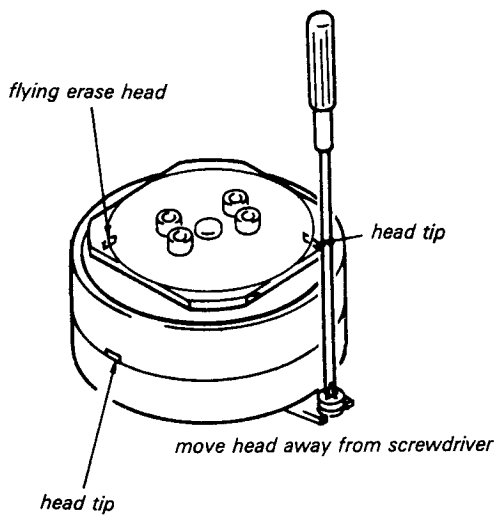


*Tightening screw A*

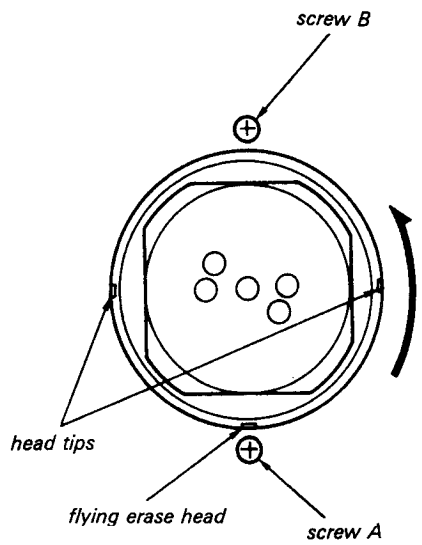


*When tightening screw B, lotate the head halfway and check the head tip position.*

*Fig. 7-49.*

### 7-3-18. Replacement of Drum Assembly

(See Fig. 7-50, 51)

#### 1. Removal

1) Remove the cassette compartment assembly according to item Section 2, 2-14.
2) Open the SP-2 board according to Section 2, 2-6.
3) Remove screw ❶ and the shaft ground terminal ❷. (See Fig. 7-50.)
4) Remove the three connectors ❸.
5) Remove the two screws ❹.
6) Remove the drum assembly ❺. (See Fig. 7-51.)

**Note:** At this time, be careful that the drum assembly does not hit No. 3 guide, etc.

#### 2. Mounting

1) Mount drum assembly ❺ and tighten the two screws ❹.
2) Connect the three connectors ❸.
3) Mount shaft ground terminal ❷ and tighten screw ❶.
4) Mount the SP-2 board by following the procedure in Section 2, 2-6. in reverse.
5) Mount the cassette compartment assembly by following the procedure in item Section 2, 2-14. in reverse.

**Note:** Be sure to perform 4. Tape Path Adjustment after mounting.

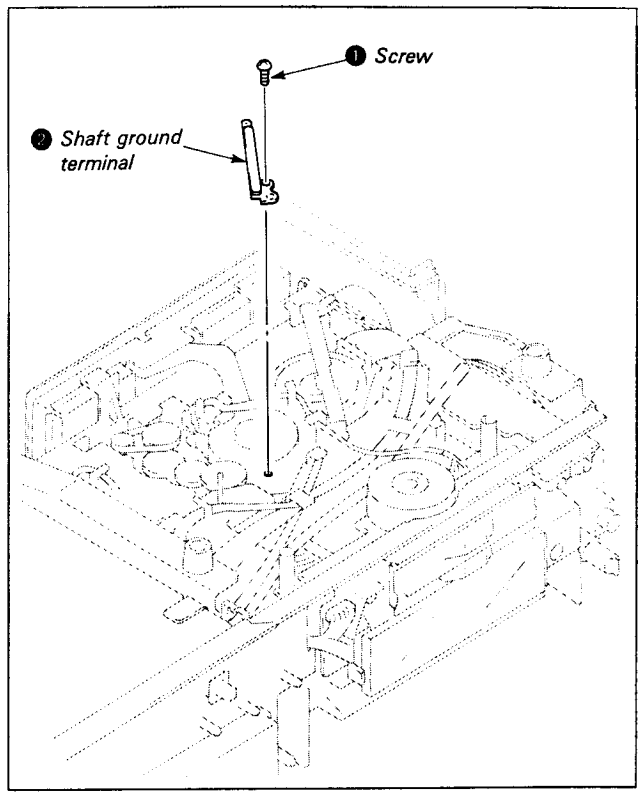


*Fig. 7-50.*

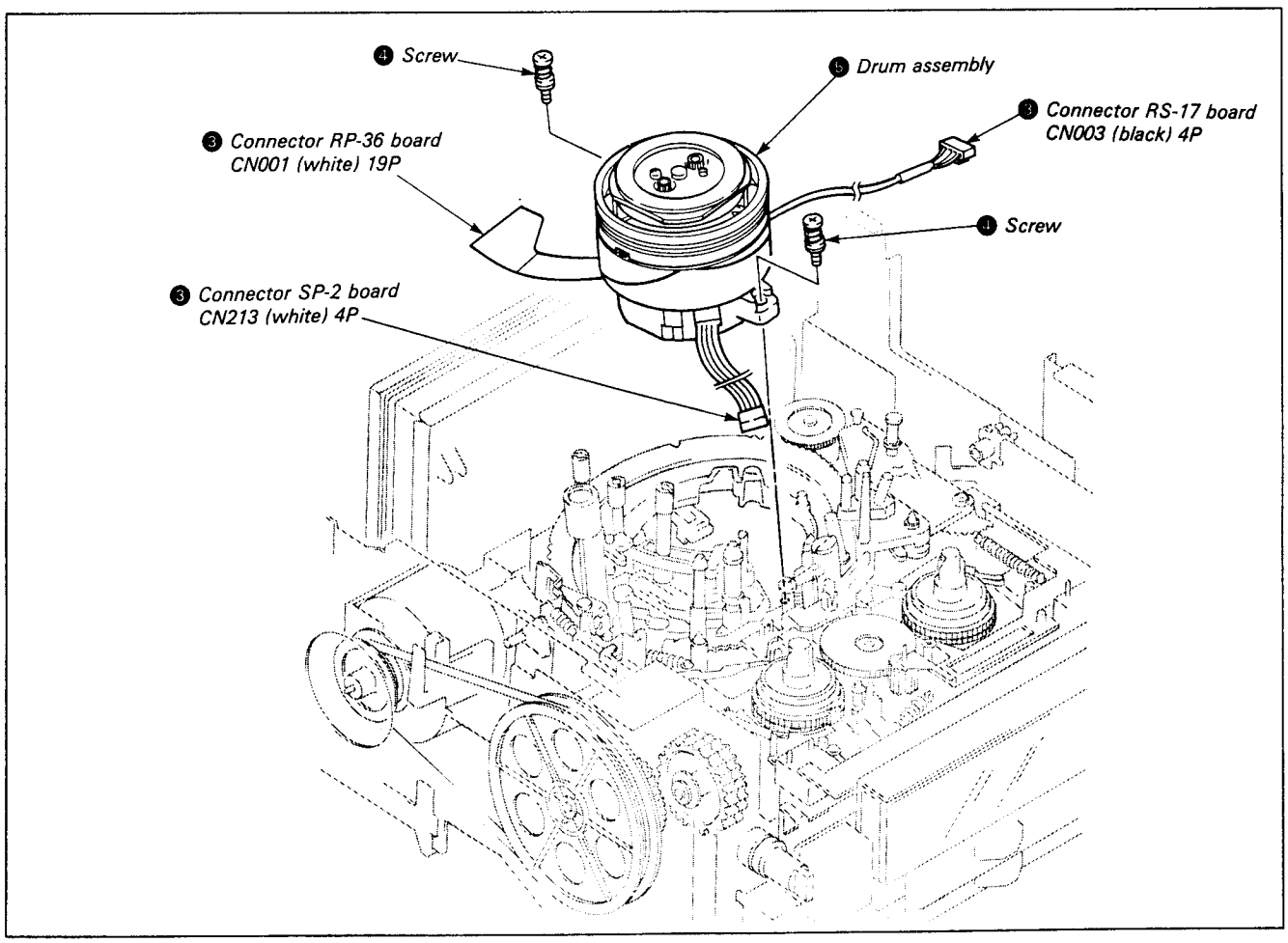


*Fig. 7-51.*

### 7-3-19. Adjustment After Replacement of No.3 Guide and No.4 Guide

For replacement of both No.3 and No.4 guides, line up the tape along the upper flange after replacing. (See Fig. 7-66.)

### 7-3-20. No.5 Guide Assembly (See Fig. 7-52.)

#### 1. Removal

1) Remove the cassette compartment assembly according to item Section 2, 2-14.
2) Remove the three screws ❶ and No.5 guide assembly.
3) Remove guide nut ❷, compression spring ❸ and No.5 guide roller assembly ❹.

#### 2. Mounting

1) Insert compression spring ❸ into No.5 guide roller assembly ❹, engage the bottom section and tighten guide nut ❷.
2) Mount No.5 guide assembly and tighten the three screws ❶.
3) Mount the cassette compartment assembly by following the procedure in item Section 2, 2-14. in reverse.

**Note:** Be sure to perform 4. Tape Path Adjustment after mounting.

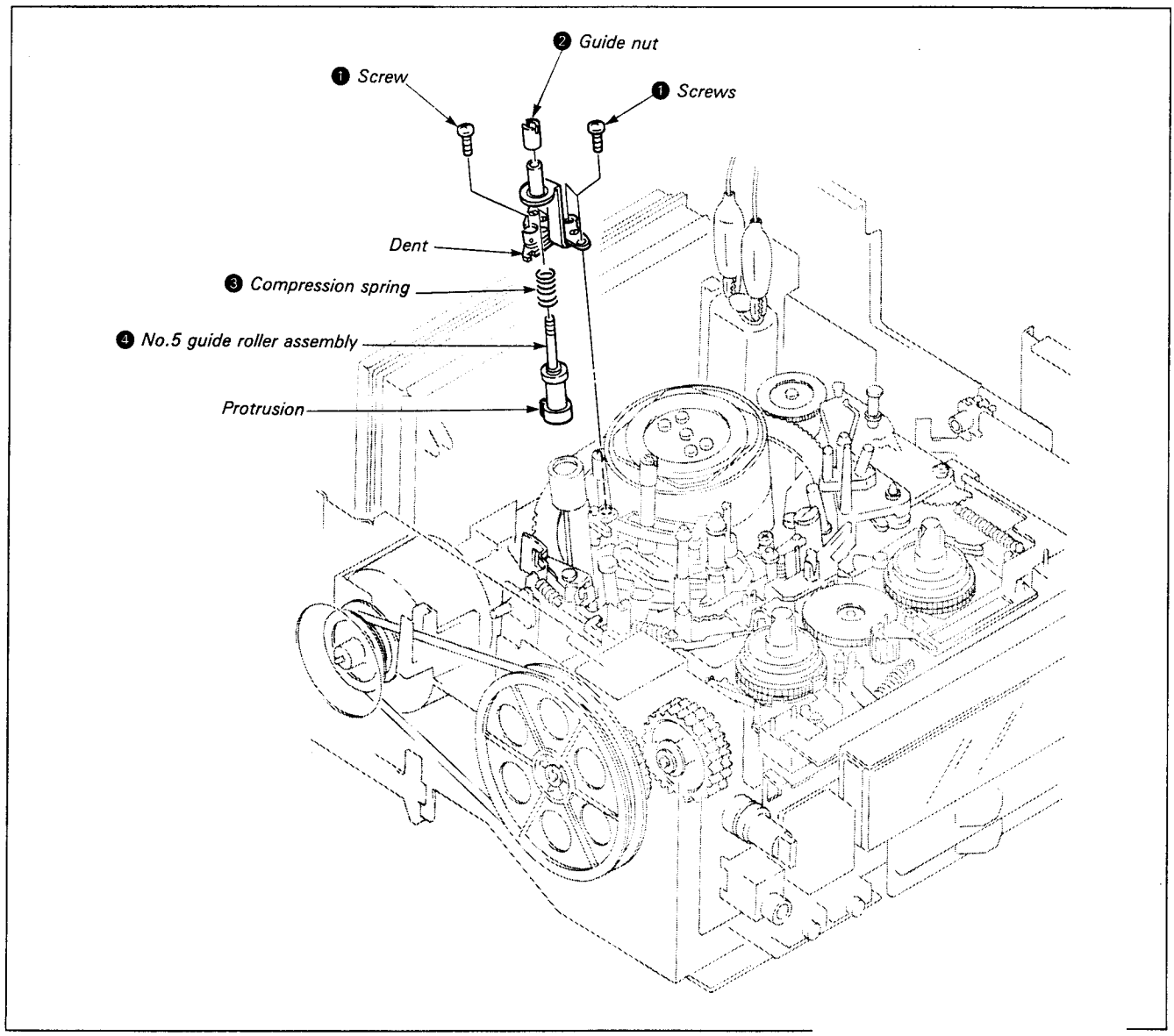


*Fig. 7-52.*

### 7-3-21. FWD Back Tension Adjustment (See Fig. 7-53.)

1) Remove the cassette compartment assembly according to Section 2, 2-14.
2) Remove the mechanism according to Section 2, 2-15.
3) Set to [LOADING END] [FWD] mode.
4) Loosen band adjustment plate ❶ screw ❷ and adjust as shown by arrow Ⓐ so that the tension regulator arm assembly slit ❸ and tension regulator arm assembly pin ❹ are positioned as shown, and tighten screw ❷.
5) Place tension measurement reel (Ref. No. J-7) ❻ on the S reel table assembly ❺ and line up with No.1 guide, No.2, No.3 guide and the drum.
6) Pull dial tension gauge (Ref. No. J-6) ❼ in the direction of arrow Ⓑ and hook tension spring ❾ onto the tension regulator spring hook assembly ❽ so that the value is 13.0 ± 1g, as shown.
   Value too large: arrow Ⓒ direction
   Value too small: arrow Ⓓ direction

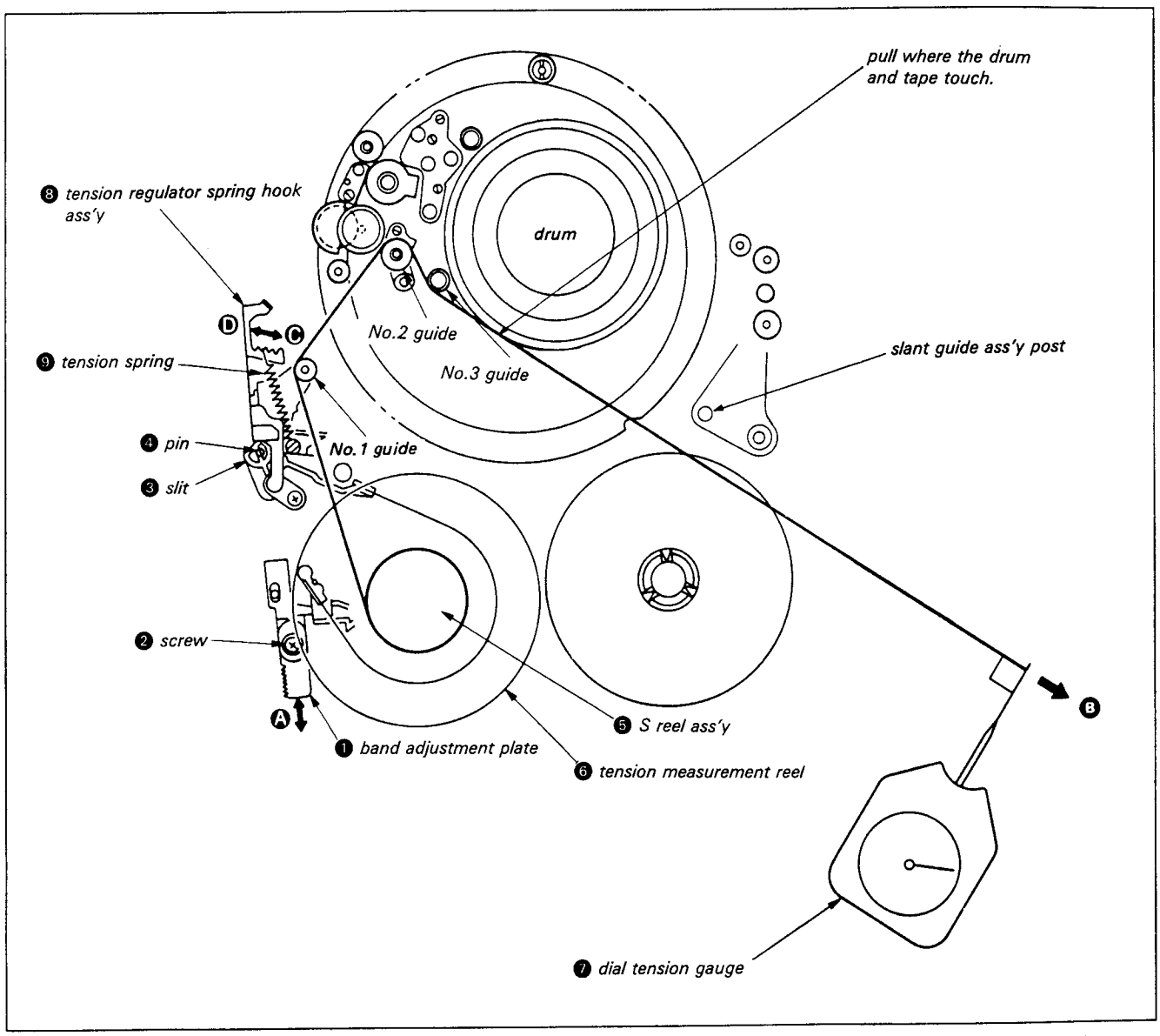


*Fig. 7-53.*

### 7-3-22. Replacement of Reel Motor (See Fig. 7-54.)

#### 1. Removal

1) Open the SP-2 board according to item Section 2, 2-6.
2) Remove connector ❶ from SP-2 board.
3) Remove the two screws ❷ and reel motor bracket ❸.
4) Remove the two screws ❹ and reel motor ❺ in the direction of arrow.

#### 2. Mounting

1) Mount the reel motor ❺ to reel motor bracket ❸ with two screws ❹.
2) Mount the reel motor assembly and tighten with two screws ❷.
3) Connect the connector ❶ to SP-2 board.
4) Mount the SP-2 board by following the procedure in Section 2, 2-6. in reverse.

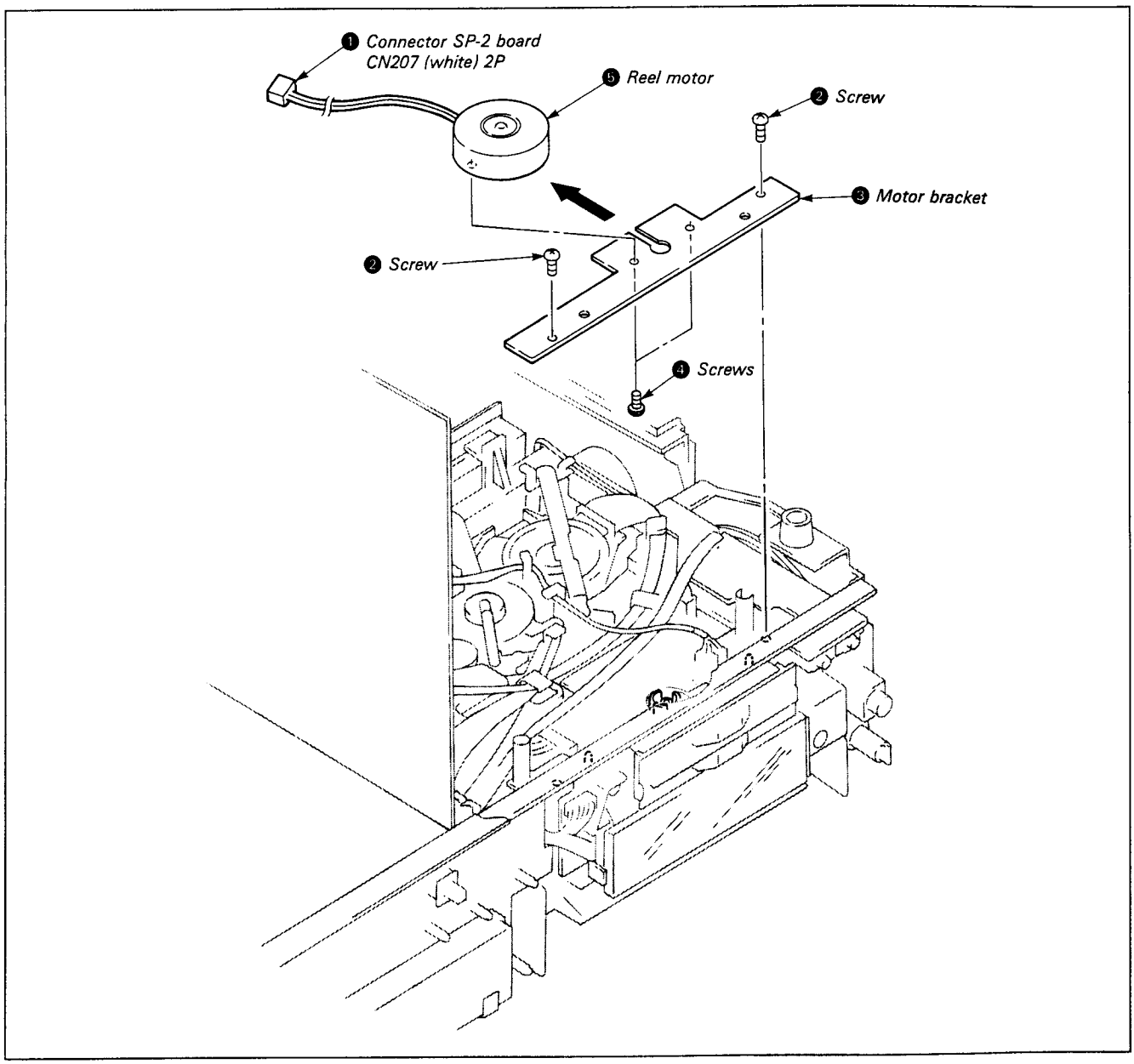


*Fig. 7-54.*

### 7-3-23. Check of S and T Main Brake Torque

1) Remove the front panel according to Section 2, 2-2.
2) Remove the cassette compartment assembly according to Section 2, 2-14.

### 1. S Main Brake Torque (See Fig. 7-55, 7-56)

1) Set to [FF/REW] mode.
2) Place the tension measurement reel (Ref. No. J-8) on the S reel table.
3) Pull the dial tension gauge (Ref. No. J-6) in the direction of the arrow and confirm that the value are satisfied.

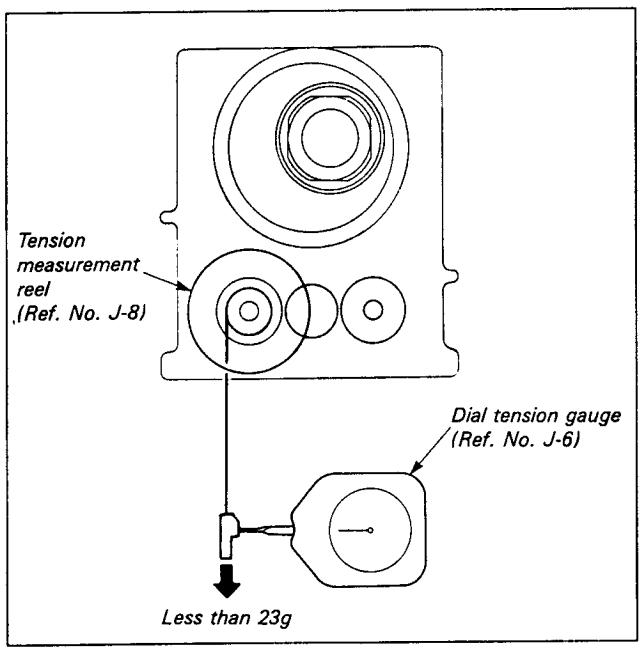


Fig. 7-55.

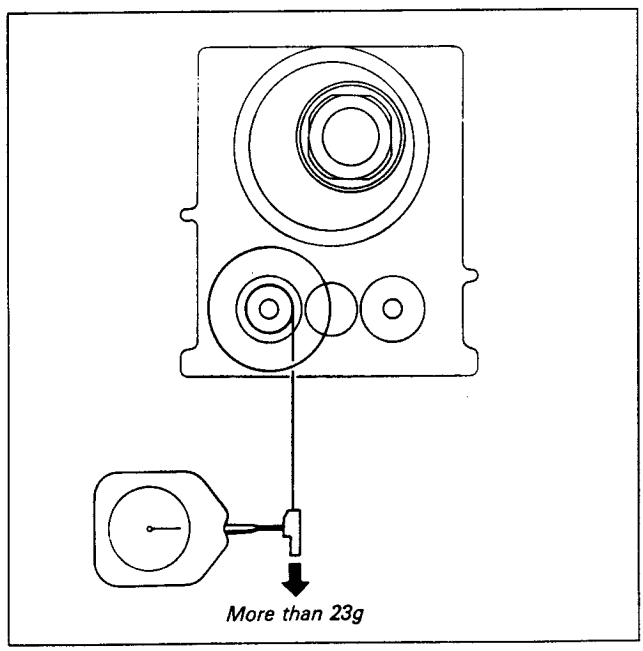


Fig. 7-56.

### 2. T Main Brake Torque (See Fig. 7-57, 7-58.)

1) Set to [FF/REW] mode.
2) Place the tension measurement reel (Ref. No. J-8) on the T reel table.
3) Pull the dial tension gauge (Ref. No. J-6) in the direction of the arrow and confirm that the value are satisfied.

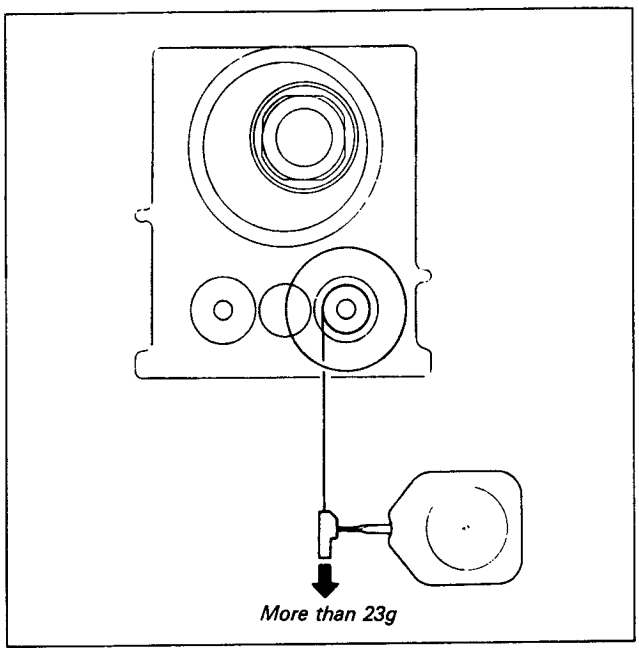


Fig. 7-57.

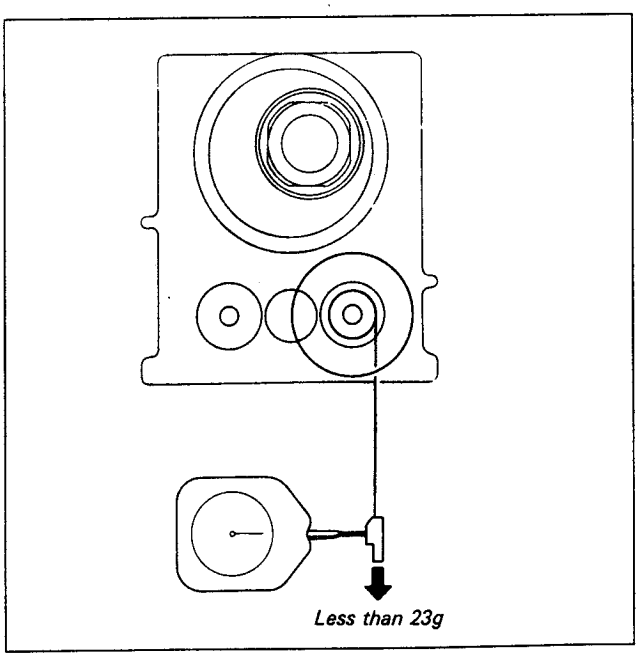


Fig. 7-58.

### 7-3-24. Check of S and T Soft Brake Torque

1) Remove the front panel according to Section 2, 2-2.
2) Remove the cassette compartment assembly according to Section 2, 2-14.

#### 1 S Soft Brake Torque (See Fig. 7-59.)

1) Set to [FF/REW] mode.
2) Place the tension measurement reel (Ref. No. J-8) on the S reel table.
3) Release the S main brake with a finger.
4) Pull the dial tension gauge (Ref. No. J-6) in the direction of the arrow and confirm that the value are satisfied.

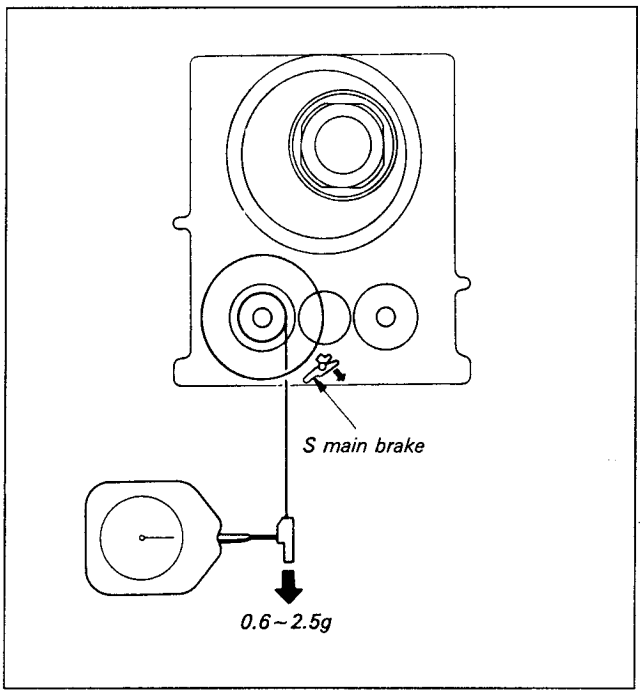


*Fig. 7-59.*

#### 2. T Soft Brake Torque (See Fig. 7-60.)

1) Set to [REV] mode.
2) Place the tension measurement reel (Ref. No. J-8) on the T reel table.
3) Release the T main brake with a finger.
4) Pull the dial tension gauge (Ref. No. J-6) in the direction of the arrow and confirm that the value are satisfied.

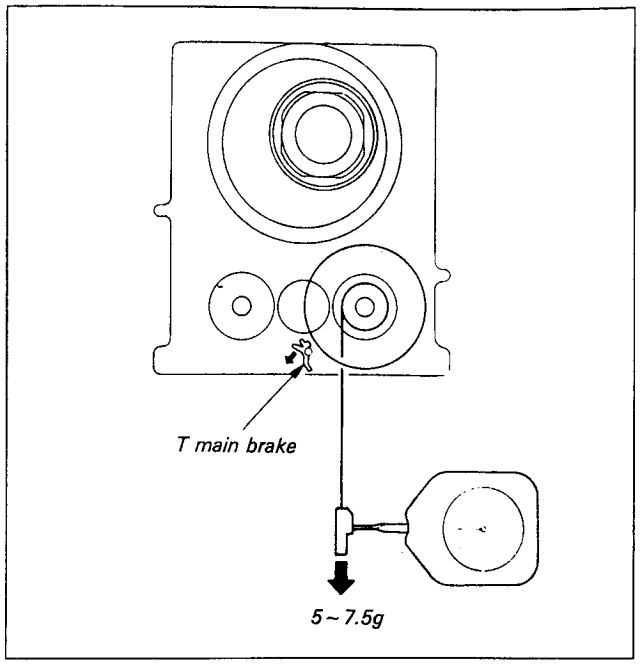


*Fig. 7-60.*

### 7-3-25. Check of REV and REW Brake Torque

1) Remove the front panel according to Section 2, 2-2.
2) Remove the cassette compartment assembly according to Section 2, 2-14.

#### 1. REV Brake Torque (See Fig. 7-61.)

1) Set to [REV] mode.
2) Place the tension measurement reel (Ref. No. J-8) on the S reel table.
3) Release the S main brake with a finger.
4) Pull the dial tension gauge (Ref. No. J-6) in the direction of the arrow and confirm that the value are satisfied.

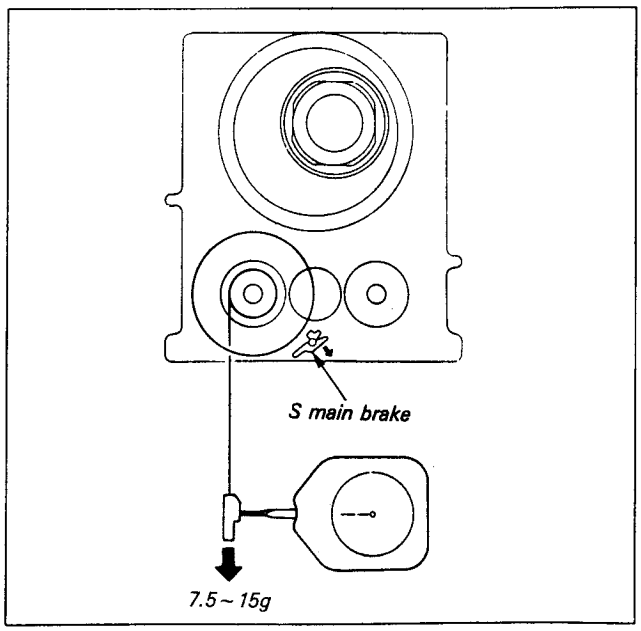


*Fig. 7-61.*

### 2. REW Brake Torque (See Fig. 7-62.)

1) Set to FF/REW mode.
2) Place the tension measurement reel (Ref. No. J-8) on the T reel table.
3) Release the T main brake with a finger.
4) Pull the dial tension gauge (Ref. No. J-6) in the direction of the arrow and confirm that the value are met.

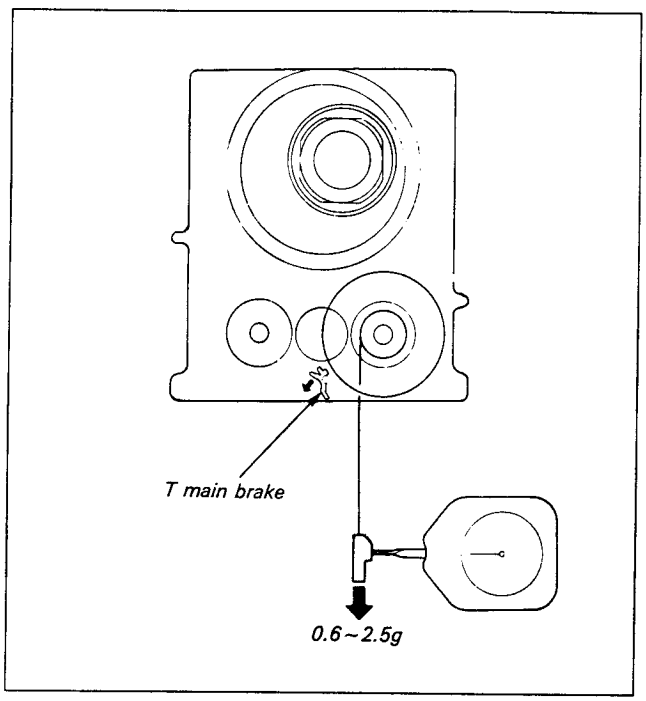


*Fig. 7-62.*

### 7-3-26. Check by FWD, RVS Take-up Torque Cassette

1) Insert the FWD, RVS take-up torque cassette (Ref. No. J-12).
2) Set for playback mode and confirm that T reel table torque is 9.5 ~ 15.5 g · cm.
3) Set for playback mode, and check that the S reel torque immediately after the REW button is pressed is 17-23 g · cm.
4) Replace the appropriate reel table if the above value are not satisfied.

## TAPE RUNNING SYSTEM DIAGRAM

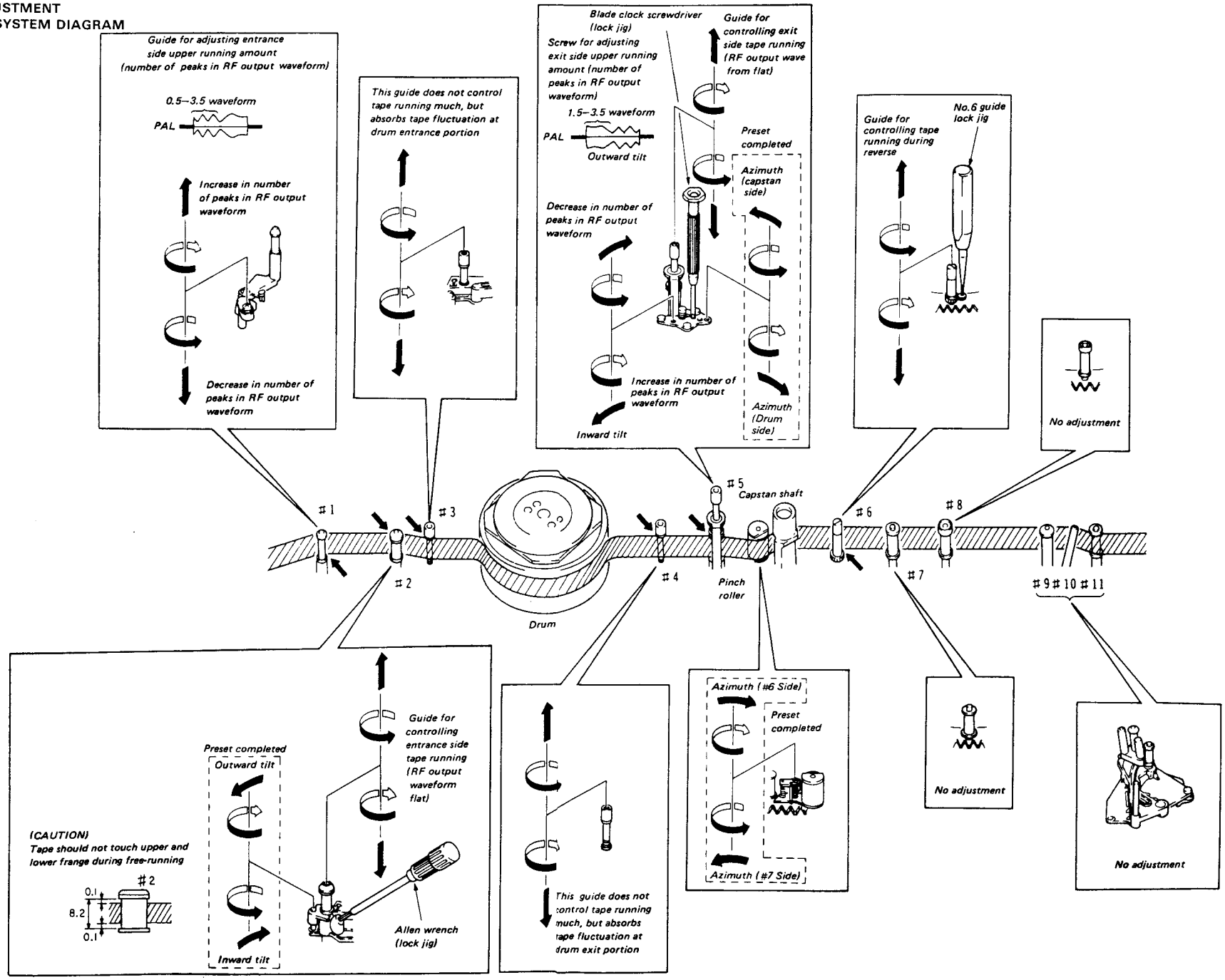

## [REGARDING TRACK SHIFT AND MONITOR JIG]

The video 8 system employs a high precision tracking ATF (auto track finding) and instantaneously controls the tape running speed with the 4 kinds pilot signals. In this way, the tracking adjustment knob becomes unnecessary, and accurate tracking has become possible.

However, on the other hand, there has been difficulty in adjusting the tape path system with the ATF method. It was due to the fact that complete adjustment had been impossible to be performed because even when the tracing of the head had been a slightly off course, the ATF would perform correction automatically.

Because of this, adjustment is carried out to the tape path system by using the track shift & monitor jig (Ref. No. J-6080-851-A). As the track shift and monitor jig forcibly releases the ATF and sets the tracking amount (track shift) manually, the adjustment of the tape path system can easily be carried out.

**Perform this adjustment after the electrical adjustment of Section 8 has been completed.**

### 7-4-1. Connection with Track Shift and Monitor Jig

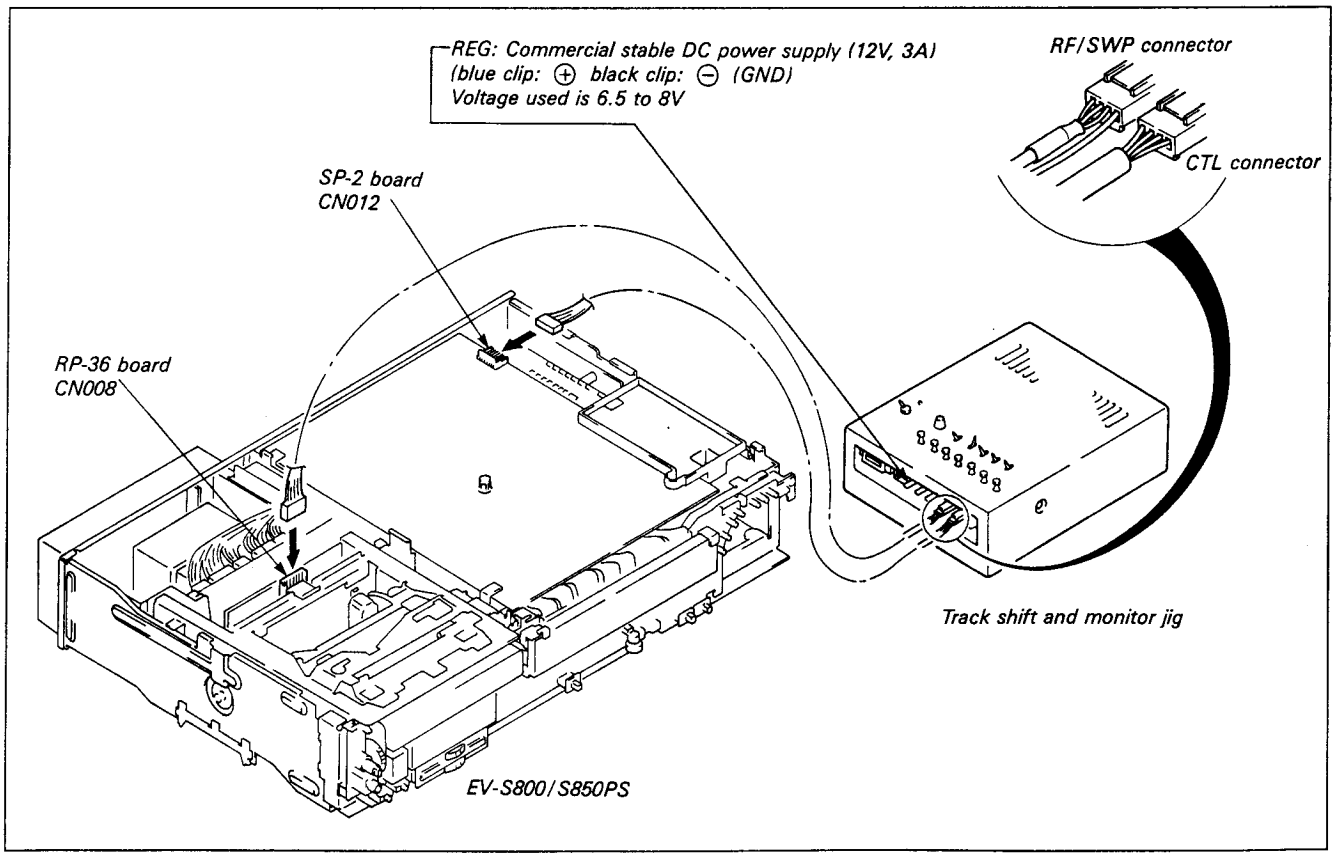


*Fig. 7-63.*

### [Track Shift and Monitor Jig Power Supply]

The track shift & monitor jig has three types of connectors for external power supply, and the following three types of power supply can be used.

| Connector Name | Power Supply |
|---|---|
| SYSTEM CONN | Connect modified CCD-V8E/UB AC adapter AC-V8 E/UB. (Refer to the track shift and monitor jig instruction manual for the modification procedure.) |
| AC ADP | Betamovie AC adapter AC-M100E/UB is connected. |
| REG | Connect commercially sold DC stable power supply of more than 12V3A and use at 6.5 ~ 8V. Be sure to make correct ⊕ and ⊖ connections. |

- Two or more types of power supply can not be used at the same time.
- Use the connector supplied with the track shift & monitor jig when connecting.
- Power supplies or voltages other than those given above should not be used.
- When using the modified AC-V8E/UB, the circuit power supply is cut off about 10 seconds after the AC-V8E/UB power switch is turned off.
- Power is not supplied to itself, so be sure to supply AC power to it at the same time.

**[Connector Connection]**

Connect the track shift & monitor jig as shown in Fig. 7-63. Connect RF/SWP connector to RP-36 board CN008, and the CTL conector to SP-2 board CN012.

**[Switch Settings]**

SEL switch: Set to ON when doing track shift. When OFF, control is from side.
PATTERN switch: Set to EV side.
ATF LOCK: Set to OFF.
Other switches are not used during adjustment.

### 7-4-2. Preparation for Adjustment

1) Perform cleaning of the tape running surface (the individual tape guides, drum, capstan shaft and pinch roller).
2) Connection of oscilloscope
   1ch: CH2 pin (RF signal)
   2ch: RF SWP pin (RF SWP signal)
   (Fig. 4-1)
3) Set the SEL switch of the track shift & monitor jig to OFF, then playback the alignment tape (WR5-1C) for tracking, and confirm that the RF waveform of both the entrance and exit sides become flat (Fig. ⓐ in 7-64.). If the RF waveform of both sides is not flat, the adjustment should be carried out in accordance with the following.
   * In case the RF waveform on the entrance side is not flat (Fig. ⓑ in 7-64.) ... Perform the adjustment in Item 7-4-3. Entrance side adjustment.
   * In case RF waveform on the exit side is not flat (Fig. ⓒ in 7-64.) ... Perform the adjustment in Item 7-4-4, Exit Side Adjustment.

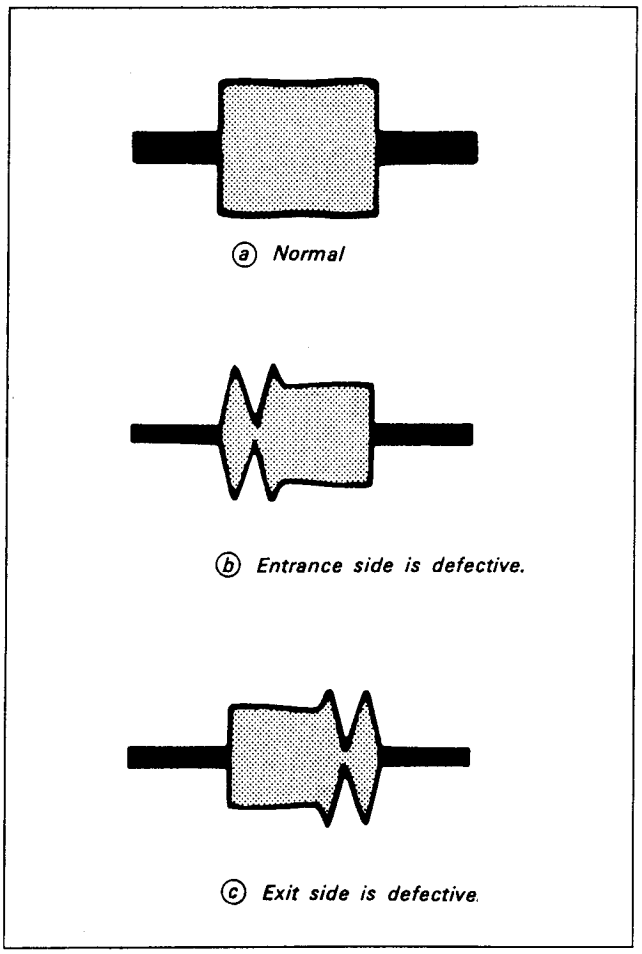


*Fig. 7-64.*

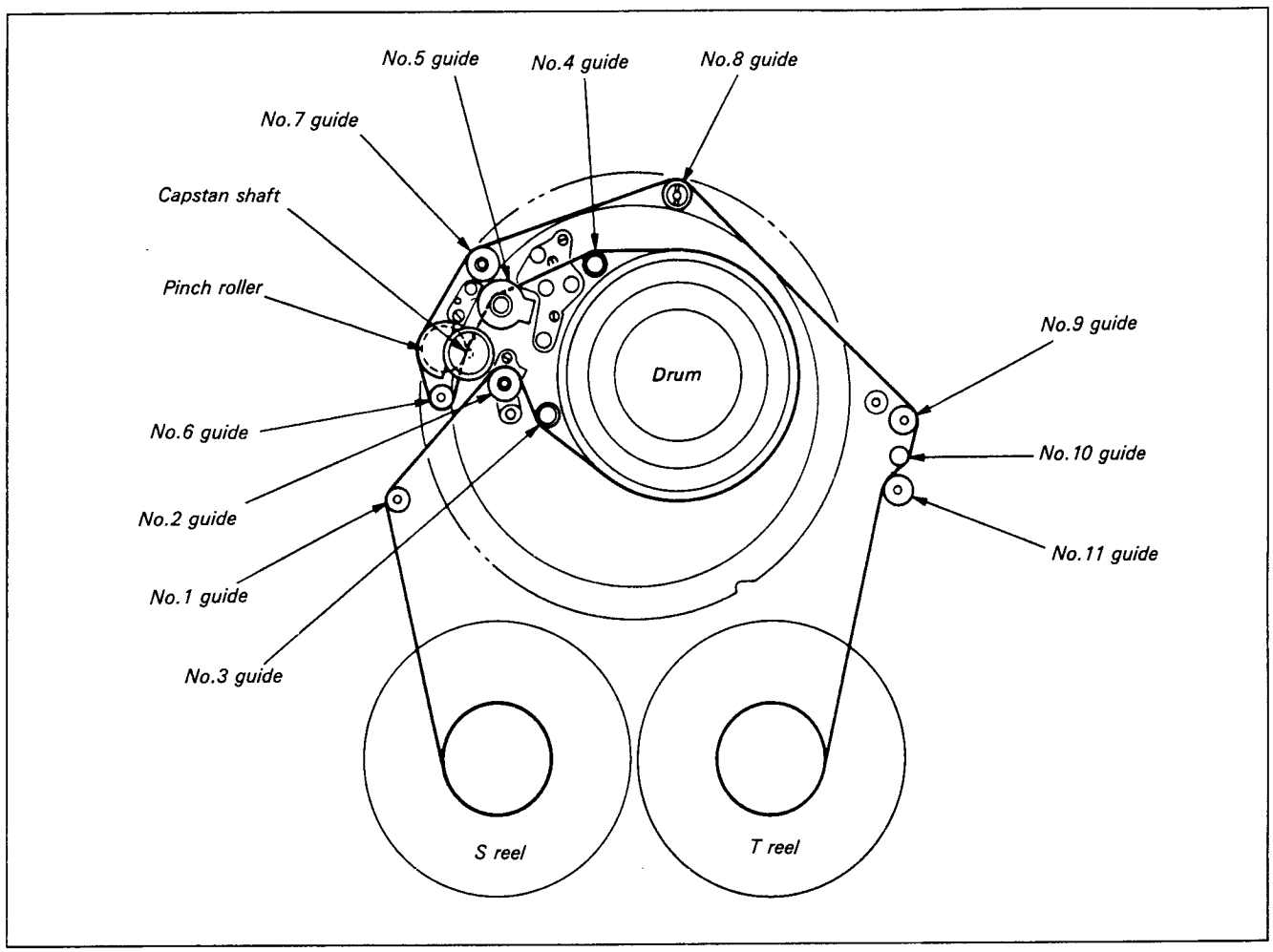


*Fig. 7-65. Tape guide arrangement diagram*

### 7-4-3. Entrance Side Adjustment

1) Playback the tracking alignment tape (WR5-1C) and loosen No.2 guide lock screw ❶, and rotate No.2 and No.3 guides counterclockwise to free tape running on the entrance side. (See Fig. 7-66.)

**Note: Since the space between the top and bottom flanges of No.2 guide is narrow, confirm that the tape is contacting neither top nor bottom flanges at this point. If No.2 guide is loosened excessively, the tape contacts the bottom flange and the RF waveform on the entrance side ceases to be the original free waveform.**

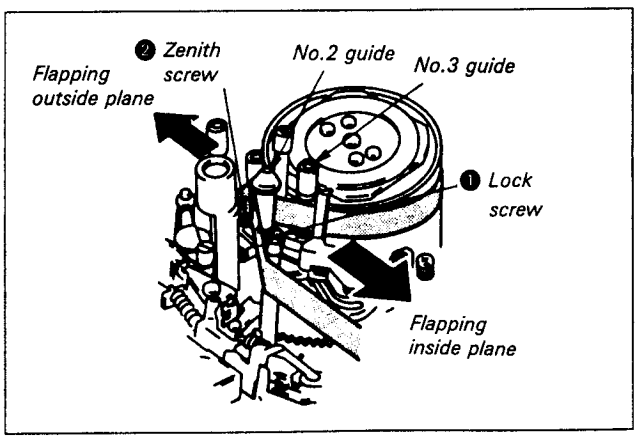


*Fig. 7-66.*

2) Confirm that RF waveform on the entrance side has 0.5 to 3.5 peaks in this condition. If not, adjust as follows. (See Fig. 7-67.)

**[less the 0.5 peak]**

Adjust the No.2 guide zenith screw ❷ by turning it counterclockwise 90° at a time. (See Fig. 7-66.)

**[more than 3.5 peaks]**

Adjust the height adjustment screw of No.1 guide (tension regulator assembly) by turning it counterclockwise 90° at a time. (See Fig. 7-68.)

3) Slowly rotate the No.2 guide clockwise to make the entrance side waveform approximately flat. (See Fig. 7-69)

   **Note: Do not rotate No.2 guide excessively.**

4) Set the SEL switch of the track shift & monitor jig to ON, then turn the track shift knob until the RF waveform amplitude is 2/3. (See Fig. 7-70.)
5) Turn No.2 guide so that the entrance side waveform flattens slightly. (See Fig. 7-71.)
6) Flatten the waveform with No.3 guide. (See Fig. 7-72.)
7) Tighten No.2 lock screw ❶. (See Fig. 7-66.)

   **Note: Be sure to perform checking in accordance with 7-4-5. after making the adjustment.**

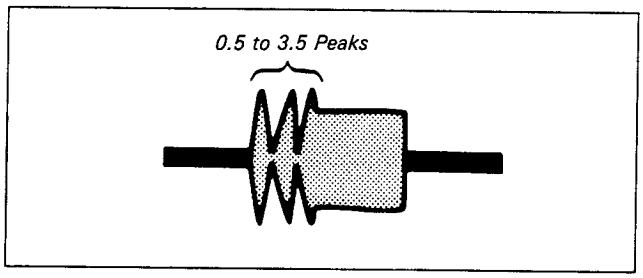


*Fig. 7-67.*

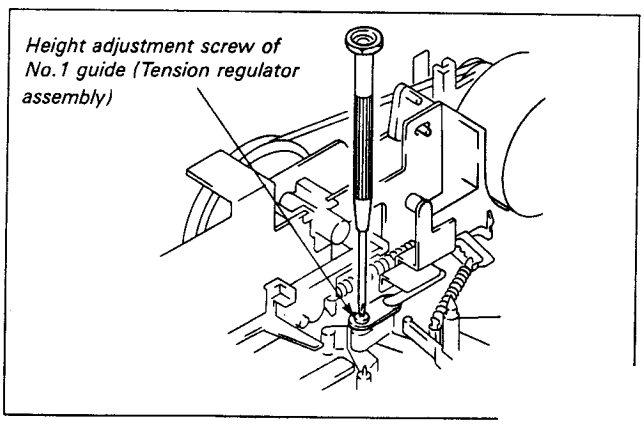


*Fig. 7-68.*

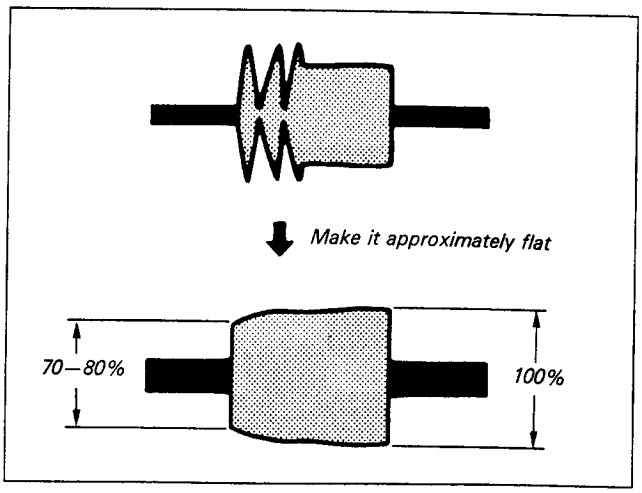


*Fig. 7-69.*

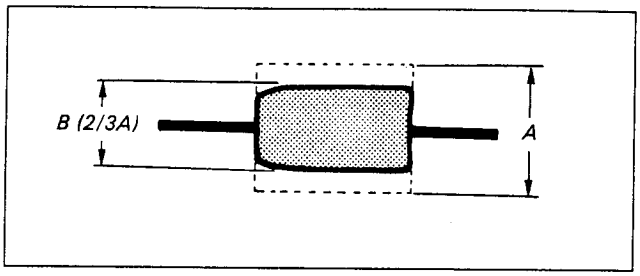


*Fig. 7-70.*

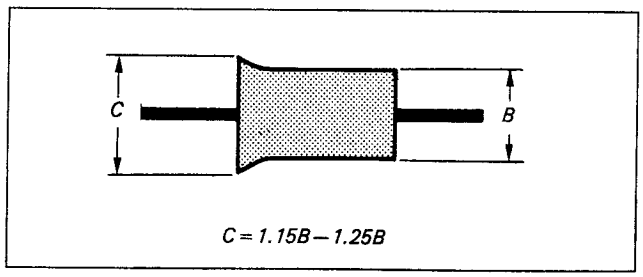


*Fig. 7-71.*

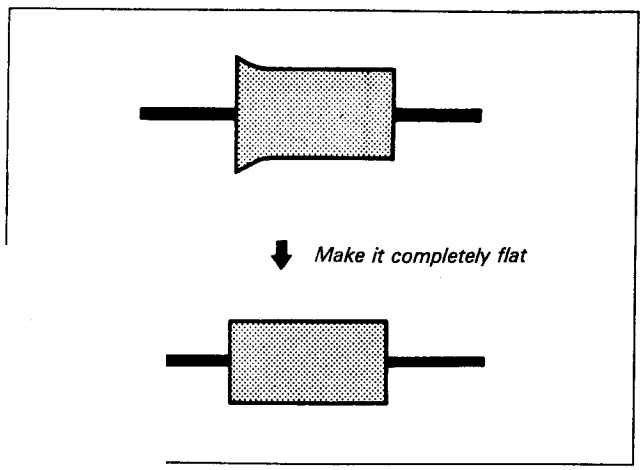


*Fig. 7-72.*

### 7-4-4. Exit Side Adjustment

1) Playback the alignment tape (WR5-1C) for tracking. Rotate No.4 guide counterclockwise and No.5 guide colockwise in order to make the tape running on the exit side free. (See Fig. 7-73.)
   **Note:** • If screw lock is stuck to the No.5 guide nut, it may prevent the nut from rotating. Rotate the guide after immersing the nut thread into alcohol and to dissolve the screw lock agent.
   • Check that the tape is not contacting the top and buttom of flanges of No.5 guide during free tape running.
2) Check that the RF waveform on the exit side has 1.5 to 3.5 peaks. If not, readjust as follows: (See Fig. 7-74.)
   **If off standard**
   i) Rotate the lock screw ❶ counterclockwise to loosen.
   ii) Slowly rotate the zenith screw ❷ 45° at a time and wait until the RF waveform varies.
   iii) Rotate the lock screw ❶ clockwise to tighten. (See Fig. 7-73.)
   **Note:** • The waveform varies if the lock screw is tightened too strongly. Tighten moderately.
   • Never rotate the azimuth screw of No.5 guide.
3) Rotate No.5 guide counterclockwise to make the RF waveform on the exit side approximately flat. (See Fig. 7-75.)
   **Note:** The waveform reaction is slow against nut rotation. Rotate the nut after the waveform variations are stabilized.
4) Set the SEL switch of the track shift & monitor jig to ON, then turn the track shift knob until the RF waveform amplitude is 2/3 (See Fig. 7-76.)
5) Turn No.5 guide so that the exit side waveform flats slightly. (See Fig. 7-77.)
6) Turn No.4 guide so that waveform flat. (See Fig. 7-78.)
   **Note:** Be sure to perform checking in accordance with 7-4-5. after making the adjustment.

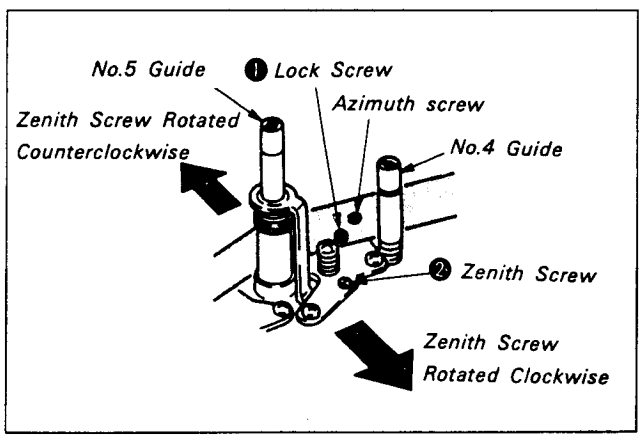


Fig. 7-73.

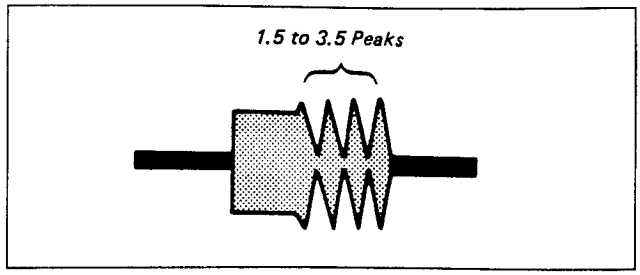


Fig. 7-74.

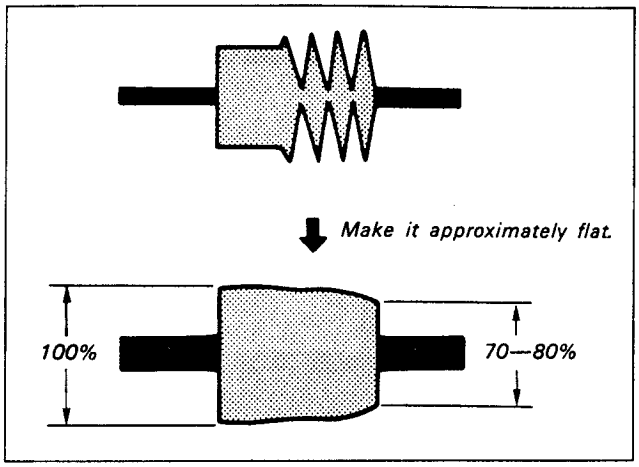


Fig. 7-75.

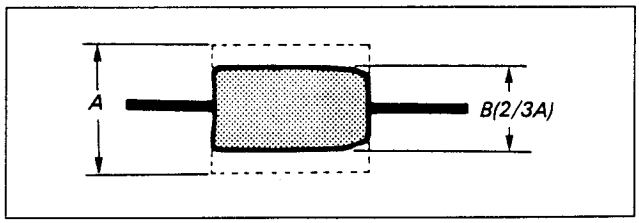


Fig. 7-76.

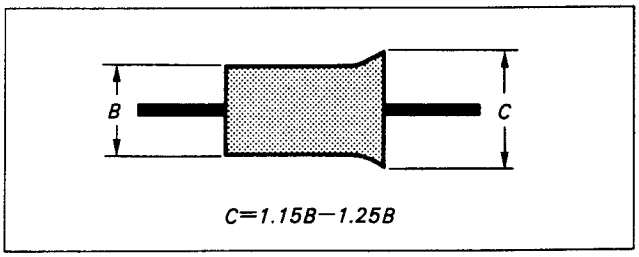


Fig. 7-77.

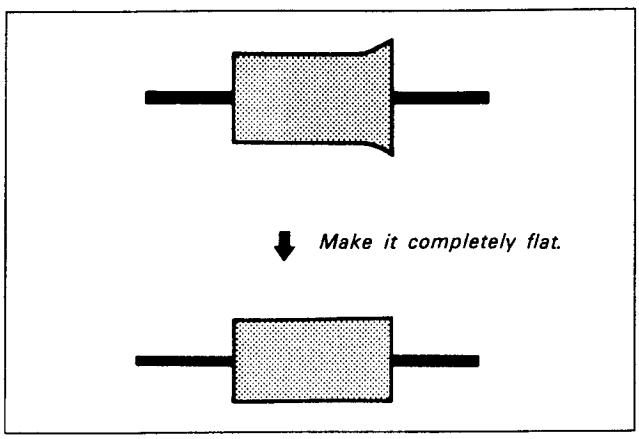


Fig. 7-78.

### 8-2-11. SLOW fH Adjustment (SP-2 Board)

#### 1. fH Bias Adjustment

The adjustment element of LP mode is shown in parentheses [ ].

| | |
|---|---|
| Mode | E-E |
| Signal | None |
| Measurement point | TP242 (Pin ⑦of IC219: FH BIAS) |
| Measurement equipment | Digital voltmeter |
| Adjustment element | RV216 [RV215] |
| Specified value | 2.0±0.1Vdc |

**[Adjustment method]**

1) Set up the SP [LP] mode by the SP/LP button.
2) Adjust with RV216 [RV215] to 2.0±0.1Vdc.

### 8-2-12. SLOW fH Adjustment

The adjustment element of LP mode is shown in parentheses [ ].

| | |
|---|---|
| Mode | FORWARD SLOW |
| Signal | SP [LP] mode self-recorded tape |
| Measurement point | Pin ③ of CN216 (COMP SYNC) |
| Measurement equipment | Oscilloscope |
| Adjustment element | RV218, RV212 [RV217] |
| Specified value | Minimum shaking width of fH pulse |

**[Connection]**

Connect TP001 ( $\overline{\text{EMERG OFF}}$ ) and TP002 (GND) with a jumper wire to set up the TEST mode.

**[Adjustment method]**

1) Adjust with RV218 and RV212 Alternately to minimize the shaking of the fH pulse.
   [Adjust with RV217 to minimize the shaking width of fH pulse.]

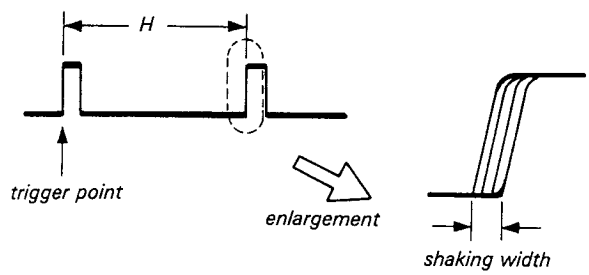


*Fig. 8-12.*

### 8-3. VIDEO SYSTEM ADJUSTMENT

The adjustment of the video system should in principle be followed the undermentioned adjustment procedure.
The colour video signal supplied from the pattern generator is utilized as the video input signal of the video system adjustment in recording mode. Make sure to check that the SYNC signal and colour burst signal are matched with those in the set-up of during the adjustment of as shown in Fig. 8-2.

**[Adjustment procedure]**

1) Playback frequency characteristics adjustment
2) Flying erase check
3) Crystal oscillator fo adjustment
4) Y/C separation adjustment
5) Y comb type filter adjustment
6) SYNC AGC adjustment
7) VIDEO OUT level adjustment
8) PB Y level adjustment
9) Y FM carrier frequency adjustment
10) Y FM deviation adjustment
11) AC clipping adjustment
12) 375fH VCO adjustment
13) Chroma emphasis fo adjustment
14) Carrier balance adjustment
15) GCA adjustment
16) fH VCO adjustment
17) REC Y level adjustment
18) REC C level adjustment
19) REC AFM level check
20) REC ATF level check

### 8-3-1. Playback Frequency Characteristic Adjustment (RP-36 Board)

(1) LP playback frequency characteristic adjustment

The adjustment elements of CH2 are shown in parentheses [ ].

| Mode | Playback |
|---|---|
| Signal | Alignment tape: For frequency characteristic adjustment (WR5-2C) |
| Measurement point | Pin ⑤ [Pin ⑥] of CN008<br>•External trigger: Pin ② of CN008<br>•Trigger slope: + [−] |
| Measurement equipment | Oscilloscope |
| Adjustment element | RV101 [RV102] |
| Specified value | 3.58MHz level: 5.5MHz level = 10:7 |

**[Adjustment method]**

1) Adjust with RV101 [RV102] so that the level difference ratio between 3.58 MHz and 5.5 MHz becomes 10:7.

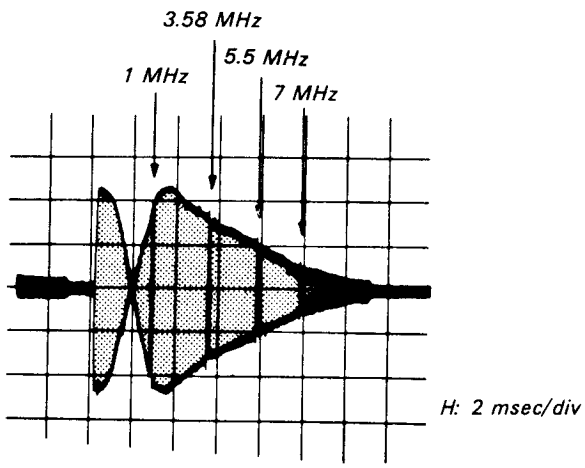


*Fig. 8-13.*

(2) SP playback frequency characteristic adjustment

The adjustment elements of CH2 are shown in parentheses [ ].

| Mode | Playback |
|---|---|
| Signal | Alignment tape: For frequency characteristic adjustment use (WR5-2C) |
| Measurement point | Pin ③ [Pin ④] of CN008<br>•External trigger: Pin ② of CN008<br>•Trigger slope: − [+] |
| Measurement equipment | Oscilloscope. |
| Adjustment element | RV201 [RV202] |
| Specified value | 3.58MHz level: 5.5MHz level = 10:7 |

**[Connection]**

Connect TP206 (F TAPE) on the SP-2 board and GND with a jumper wire.

**[Adjustment method]**

1) Adjust with RV201 [RV202] so that the level difference ratio between 3.58 MHz and 5.5 MHz becomes 10:7.

### 8-3-2. Flying Erase Check (RP-36 Board)

| Mode | REC |
|---|---|
| Signal | Arbitrary |
| Measurement point | Pin ⑱ of CN001 (FE(X)) |
| Measurement equipment | Oscilloscope and frequency counter |
| Specified value | Frequency: Over 7 MHz<br>Voltage: Over 8 Vp-p |

**Note:** Be sure to use MP type tape (Pin ② of CN002 should be "L").

**[Confirmation method]**

1) Make sure that the oscillation frequency is over 7 MHz and the oscillation voltage is over 8 Vp-p.

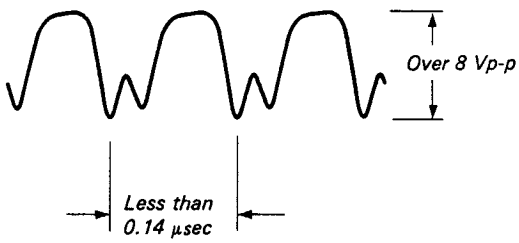


*Fig. 8-14.*

### 8-3-3. Crystal Oscillator fo Adjustment (CH-44/VI-20 Board)

| | |
|---|---|
| Mode | Playback |
| Signal | Alignment tape: For operation confirmation (WR5-3CSP) |
| Measurement point | Pin ② of CH-44 board |
| Measurement equipment | Frequency counter |
| Adjustment element | CV001 on CH-44 board |
| Specified value | 4433619 ± 50Hz |

**Note:** Connect the frequency counter through a buffer of high impedance (approximately 10 MΩ) and low capacitance (less than 10pF)

**[Adjustment method]**

1) Adjust with CV001 on the CH-44 board so that it becomes 4433619 ± 50Hz.

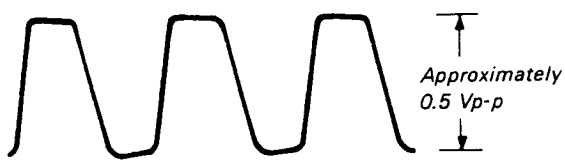


*(4433619±50 Hz)*

*Fig. 8-15.*

### 8-3-4. Chrome Comb Filter Adjustment (VI-20 Board)

| | |
|---|---|
| Mode | E-E |
| Signal | Colour bar |
| Measurement point | Pin ⑳ of IC002 |
| Measuring equipment | Oscilloscope. |
| Adjustment element | RV011, LV201 |
| Specified value | Minimum residual chroma component |

**[Connection]**

Connect Q202 base to GND with a jumper wire.

**[Adjustment method]**

1) Adjust with RV011 and LV201 alternately so that the residual chroma component becomes minimum.

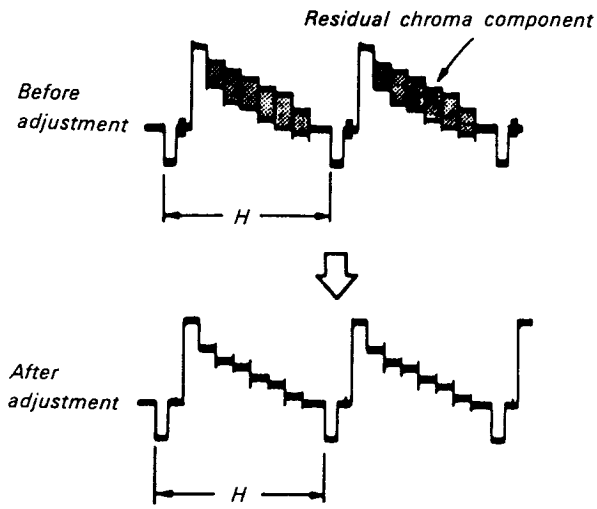


*Fig. 8-16.*

### 8-3-5. Y Comb Type Filter Adjustment (VI-20 Board)

| | |
|---|---|
| Mode | E-E |
| Signal | Colour bar |
| Measurement point | Pin ③ of IC002 |
| Measurement equipment | Oscilloscope |
| Adjustment element | RV012 |
| Specified value | Minimum Y-YD signal level |

**Note:** Be sure to connect a 22kΩ of resistor in series between Pin ③ of IC002 and 10:1 probe.

**[Adjustment method]**

1) Adjust with RV012 so that the Y-YD signal level at the sync portion is minimum.
2) While playing back a tape in which dropouts are recorded, be sure to confirm that these dropouts are not discernible. In the event the dropouts become discernible, adjust with RV012 so that they become undiscernible.

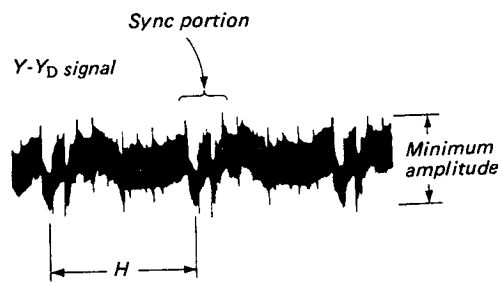


*Fig. 8-17.*

### 8-3-6. SYNC AGC Adjustment (VI-20 Board)

| | |
|---|---|
| Mode | E-E |
| Signal | Colour bar |
| Measurement point | Pin ㉛ of IC001 |
| Measurement equipment | Oscilloscope |
| Adjustment element | RV009 |
| Specified value | 0.50±0.02Vp-p |

**[Adjustment method]**

1) Adjust with RV009 so that it becomes 0.50±0.02 Vp-p.

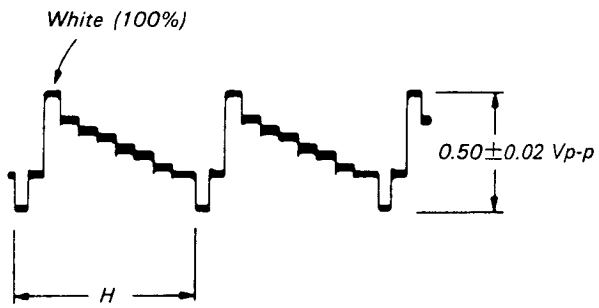


*Fig. 8-18.*

### 8-3-7. VIDEO OUT Level Adjustment (VI-20 Board)

| | |
|---|---|
| Mode | E-E |
| Signal | Colour bar |
| Measurement point | Pin ⑤ of CN007 |
| Measurement equipment | Oscilloscope. |
| Adjustment element | RV010 |
| Specified value | 1.00±0.05 Vp-p |

**[Adjustment method]**

1) Adjust with RV010 so that it becomes 1.00±0.05 Vp-p.

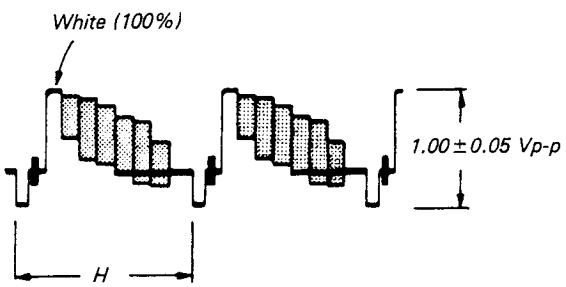


*Fig. 8-19.*

### 8-3-8. PB Y Level Adjustment (VI-20 Board)

| | |
|---|---|
| Mode | Playback |
| Signal | Alignment tape: For operation confirmation (WR5-3 CSP) Colour bar section |
| Measurement point | Pin ⑤ of CN007 |
| Measurement equipment | Oscilloscope |
| Adjustment element | RV005 |
| Specified value | 1.00±0.05 Vp-p |

**Note:** 1. Set the SHARPNESS control (FT-13 board RV001) to the center click position.
2. Be sure that the EDIT switch (S014 on FT-13 board) is turned OFF. (Confirm that the EDIT lamp is not lit.)

**[Adjustment method]**

1) Adjust with RV005 so that it becomes 1.00±0.05 Vp-p.

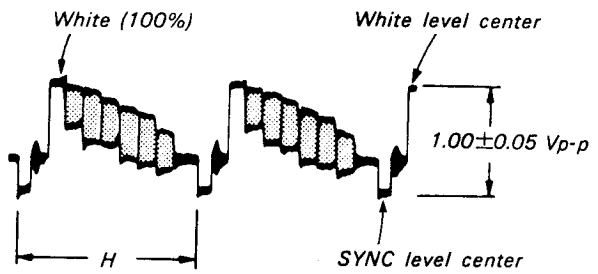


*Fig. 8-20.*

### 8-3-9. Y FM Carrier Frequency Adjustment (VI-20 Board)

| | |
|---|---|
| Mode | E-E |
| Signal | Non-signal |
| Measurement point | Pin ⑤ of CN003 (REC Y) |
| Measurement equipment | Frequency counter |
| Adjustment element | RV008 |
| Specified value | 4.20±0.05 MHz |

**Note:** Set up the SP mode.

**[Adjustment method]**

1) Set RV007 (EMPH) to the mechanical center. (The slide pin of RV007 is approximately 2.7Vdc.)
2) Adjust with RV008 so that it becomes 4.20±0.05MHz.
3) Be sure to perform the "Deviation adjustment" and "AC CLIP adjustment".

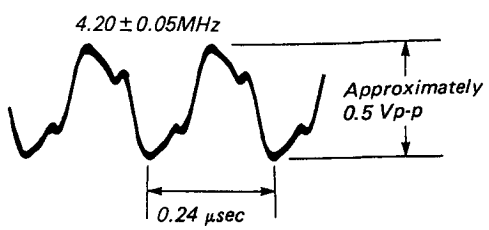


*Fig. 8-21.*

### 8-3-10. Y FM Deviation Adjustment (VI-20 Board)

| | |
|---|---|
| Mode | Recording and playback |
| Signal | Colour bar |
| Measurement point | Pin ⑤ of CN007 |
| Measurement equipment | Oscilloscope |
| Adjustment element | RV006 |
| Specified value | Playback level: 1.00±0.05Vp-p |

**Note:** 1. Be sure that the "VIDEO OUT level adjustment". "PB Y level adjustment" and "Y FM carrier frequency adjustment" have been completed.
2. Set the SHARPNESS Control (FT-13 board RV001) to the center click position.
3. Be sure the EDIT switch (S014 on the FT-13 board) is turned OFF. (Confirm that the EDIT lamp is not lit.)

**[Adjustment method]**

1) Record the colour bar signal.
2) Playback the recorded section.
3) Be sure to check the playback output level.
Specified value: 1.00±0.05 Vp-p
4) When the specified value is not satisfied, repeat 1) to 3) after turning RV006 in the following manner.

| | Turning direction of RV006 Seen from component side |
|---|---|
| When larger than the specified value | Clockwise (↷) |
| When smaller than the specified value | Counterclockwise (↶) |

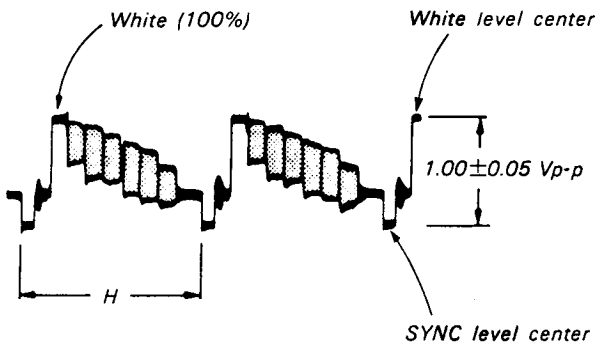


*Fig. 8-22.*

### 8-3-11. Emphasis Adjustment (VI-20 Board)

| | |
|---|---|
| Mode | E-E |
| Signal | Colour bar |
| Measurement point | Pin ⑱ of IC001 |
| Measurement equipment | Oscilloscope |
| Adjustment element | RV007 |
| Specified value | 230±10% |

**[Adjustment method]**

1) Adjust with RV007 so that the peak of the white 100% becomes 230±10%.

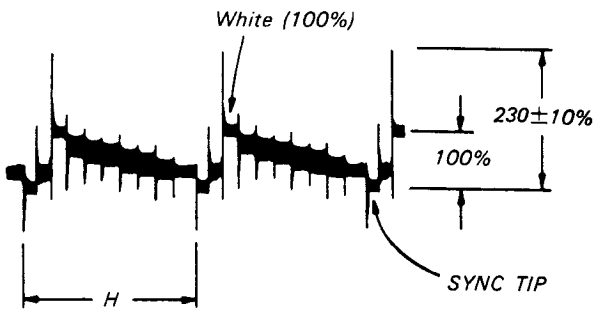


*Fig. 8-23.*

### 8-3-12. 375fH VCO Adjustment (CH-44/VI-20 Board)

| | |
|---|---|
| Mode | Recording |
| Signal | Colour bar |
| Measurement point | Pin ㉖ of IC001 on CH-44 board |
| Measurement equipment | Digital voltmeter |
| Adjustment element | RV001 on CH-44 board |
| Specified value | 3.00±0.05Vdc |

**[Adjustment method]**

1) Adjust with RV001 on the CH-44 board so that it becomes 3.0±0.05Vdc.

### 8-3-13. Chroma Emphasis fo Adjustment (CH-44/VI-20 Boards)

| | |
|---|---|
| Mode | E-E |
| Signal | Colour bar |
| Measurement point | Pin ㊱ of CH-44 board |
| Measurement equipment | Oscilloscope |
| Adjustment element | T001 on CH-44 board |
| Specified value | Be sure to confirm that the fo component is minimum and zero cross appears between green and magenta. |

**[Connection]**

Connect the following two locations of CH-44 board using 4.7kΩ resistors.

Pin ㉗ (ACC) — Pin ㉝ (GND)
Pin ㉗ (ACC) — Pin ㊲ (5V)

**[Adjustment method]**

1) Adjust with T001 on the CH-44 board so that the amplitude of the flat cyan section of the chroma signal becomes minimum.
   At this point, be sure to confirm that the zero cross appears between the green and magenta.

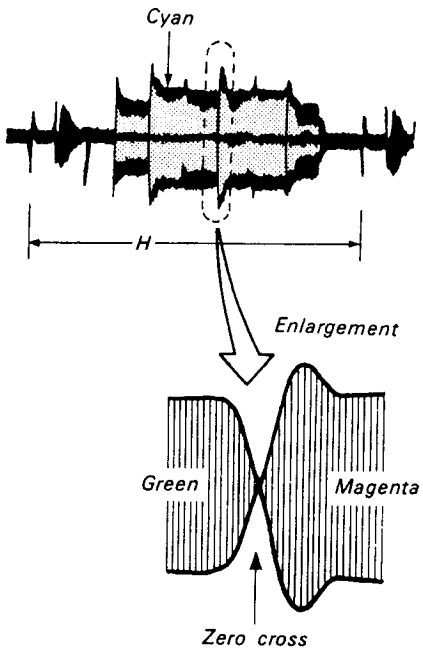


*Fig. 8-24.*

### 8-3-14. Carrier Balance Adjustment (CH-44/VI-20 Board)

| | |
|---|---|
| Mode | E-E |
| Signal | Colour bar |
| Measurement point | Pin ㉘ of CH-44 board |
| Measurement equipment | Oscilloscope |
| Adjustment element | RV002 on CH-44 board |
| Specified value | Minimize 5.17 MHz signal component |

**[Adjustment method]**

1) Adjust with RV002 on the CH-44 board so that the 5.17 MHz signal component becomes minimum.

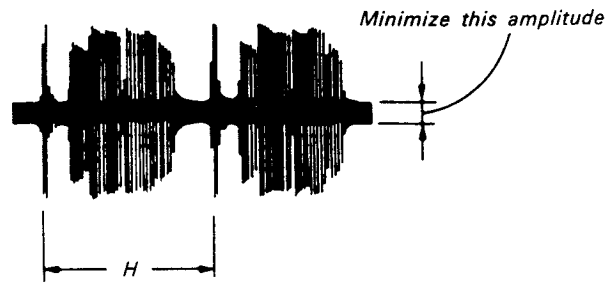


*Fig. 8-25.*

### 8-3-15. GCA Adjustment (VI-20 Board)

| | |
|---|---|
| Mode | Playback |
| Signal | Arbitrary tape |
| Measurement point | Pin ㉒ of IC005 |
| Measurement equipment | Oscilloscope |
| Adjustment element | RV014 |
| Specified value | 500 ± 25 mVp-p |

**[Adjustment method]**

1) Adjust with RV014 so that it becomes 500 ± 25 mVp-p.
2) Set to either the STILL, CUE or REVIEW mode, and be sure to confirm that the thickness of the colour does not differ from that of the playback mode. If necessary, adjust with RV014. (Be sure to play back a tape of LP mode.)

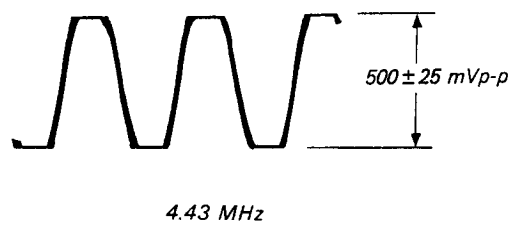


*Fig. 8-26.*

### 8-3-16. $f_H$ VCO Adjustment (VI-20 Boards)

| | |
|---|---|
| Mode | E-E |
| Signal | Colour bar |
| Measurement point | CH1: Pin ⑬ of IC005<br>CH2: Pin ⑤ of CN007 |
| Measurement equipment | Oscilloscope |
| Adjustment element | RV013 |
| Specified value | 14.5 ± 0.2 μsec |

**[Adjustment method]**

1) Adjust RV013 so that the $T_R$ of CH1 is 14.5 ± 0.2 μsec.
2) Confirm that the H (time) of CH1 and CH2 is stable.

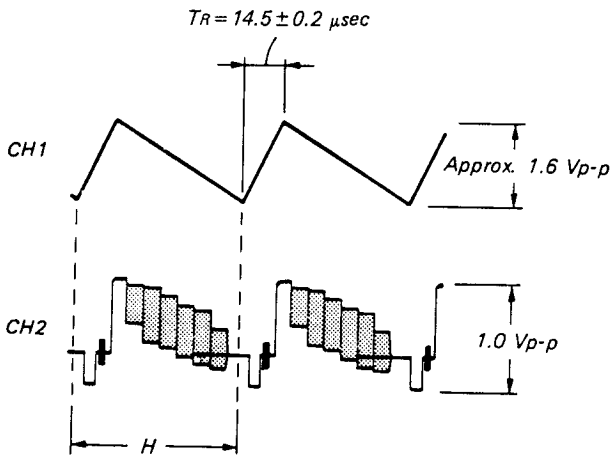


*Fig. 8-27.*

### 8-3-17. REC Y Level Adjustment (VI-20 Boards)

| | |
|---|---|
| Mode | REC (SP mode) |
| Signal | Non-signal |
| Measurement point | Pin ⑤ of CN003 (Note 2.) |
| Measurement equipment | Oscilloscope |
| Adjustment element | RV005 |
| Specified value | 0.46 ± 0.02 Vp-p |

**Note 1:** Be sure to always perform the adjustment of the REC C level after the REC Y level adjustment has been completed.

**Note 2:** Use the low-pass filter shown in Fig. 8-28.

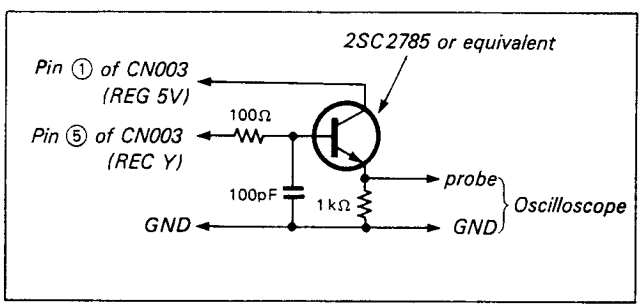


*Fig. 8-28.*

**[Adjustment method]**

1) Adjust with RV005 so that it becomes 0.46 ± 0.02 Vp-p.

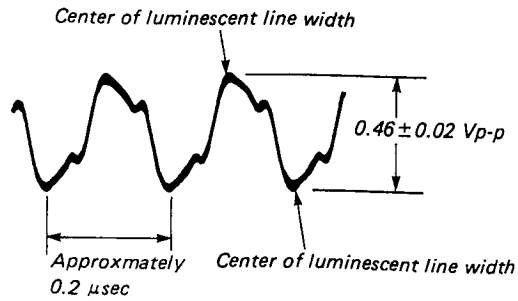


*Fig. 8-29.*

### 8-3-18. REC C Level Adjustment (VI-20 Board)

| | |
|---|---|
| Mode | REC |
| Signal | Colour bar |
| Measurement point | Pin ⑤ of CN003 (Note 1.) |
| Measurement equipment | Oscilloscope |
| Adjustment element | RV001 |
| Specified value | 58 ± 3 mVp-p |

**Note 1 :** Use the low-pass filter shown in Fig. 8-28.

**Note 2 :** Be sure to use the MP type tape. (Be sure Pin ④ of W001 TAPE 2/$\overline{\text{TAPE 1}}$ is at "L".)

**[Connection]**

Connect the following three points on VI-20 board with jumper wires.

1) L106 (Q113 base: REC Y) and GND.
2) W002 ① PIN (REC AFM) and GND.
3) W005 ⑤ PIN (REC ATF) and GND.

**[Adjustment method]**

1) Adjust with RV001 so that it becomes 60 mVp-p.

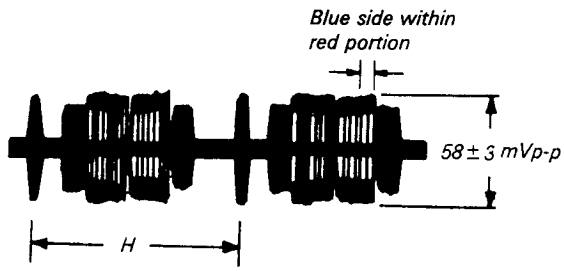


*Fig. 8-30.*

F
MA
(
Tel:-
E

### 8-3-19. REC AFM Level Check (VI-20 Boards)

| | |
|---|---|
| Mode | REC (SP mode) |
| Signal | Non-signal |
| Measurement point | Pin ⑤ of CN003 (Note 1.) |
| Measurement equipment | Oscilloscope |
| Specified value | 20.5±4.0 mVp-p |

**Note:** 1. Use the low-pass filter shown in Fig. 8-28.
2. Be sure to use the MP type tape.
(Be sure Pin ④ of W001 TAPE 2/$\overline{\text{TAPE 1}}$ is at "L".
3. When the signal level is too small to read, use a 1:1 probe.

**[Connection]**

Connect the following three points on the VI-20 board with jumper wires.

1) L106 (Q113 base: REC Y) and GND.
2) W005 ⑤ PIN (REC ATF) and GND.

**[Confirmation method]**

1) Check that the REC AFM level is 20.5±4.0 mVp-p.

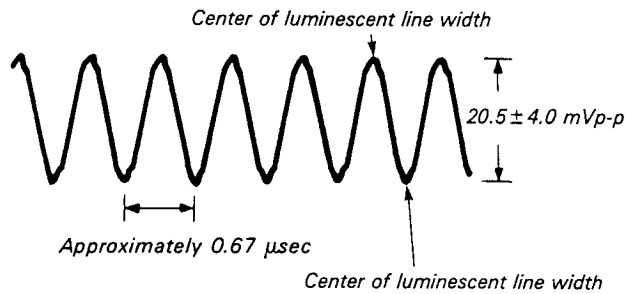


*Fig. 8-31.*

### 8-3-20. REC ATF Level Check (VI-20 Board)

| | |
|---|---|
| Mode | REC (SP mode) |
| Signal | Non-signal |
| Measurement point | Pin ⑤ of CN003 (Note 1.) |
| Measurement equipment | Oscilloscope |
| Specified value | 13.5±3.0 mVp-p |

**Note:** 1. Use the low-pass filter shown in Fig. 8-28.
2. Be sure to use the MP type tape.
(Be sure Pin ④ of W001 TAPE 2/$\overline{\text{TAPE 1}}$ is at "L".)
3. When the signal level is too small too read, use a 1:1 probe.

**[Connection]**

Connect the following two points on the VI-20 board with jumper wires.

1) L106 (Q113 base: REC Y) and GND.
2) W002 ① PIN (REC AFM) and GND.

**[Confirmation method]**

1) Check that the REC ATF level is 13.5±3.0 mVp-p.

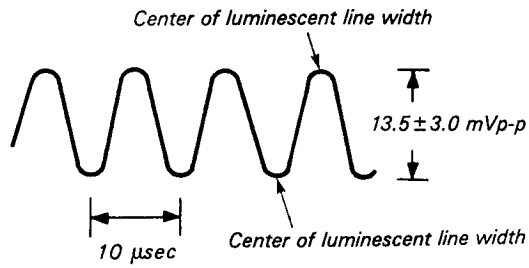


*Fig. 8-32.*

## 8-4. AUDIO SYSTEM ADJUSTMENT

Use a colour bar signal as video signal input when performing adjustment.
Connection of Audio Adjustment Measuring Instruments
Connect the following audio measuring equipment in addition to the video measuring instruments.

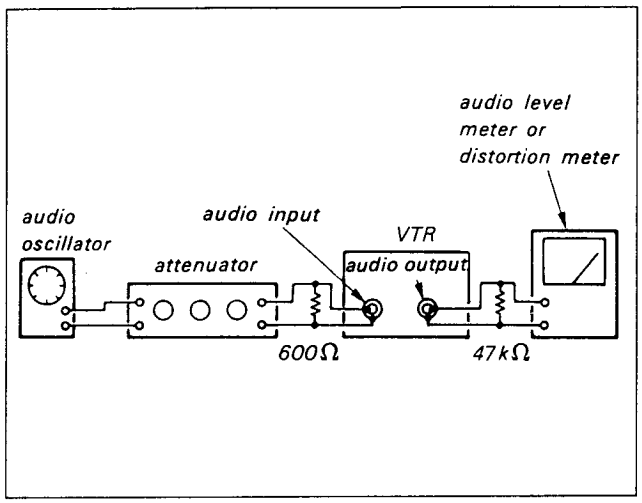


*Fig. 8-33.*

### 8-4-1. PCM Audio System Adjustment

Unless otherwise specified, set the VTR switches and controls as shown below when making the adjustment.

INPUT SELECT switch .....LINE
AUDIO MONITOR (PCM/MIX/STD)
switch .....PCM
REC LEVEL controls .....[5]
PCM MODE switch.....NORMAL

**Note:** The adjustment element of R ch is shown in parentheses [ ].

**[Adjustment Order]**

1) PCM Master Clock Oscillation Frequency Adjustment
2) REC PCM Level Check
3) MULTI PILOT Frequency Check
4) PCM Playback VCO Free Oscillation Frequency Adjustment
5) MULTI PILOT Detector Adjustment
6) PCM Playback Level Adjustment
7) E-E Output Level Check
8) PCM Offset Adjustment
9) PCM Recording Level Adjustment
10) Overall Frequency Characteristics
11) Overall Distortion Ratio Check
12) Overall S/N Check

### 1. PCM Master Clock Adjustment (SP-2 Board)

| Mode | Record |
|---|---|
| Signal | None |
| Measurement point | Pin ③ of CN601 |
| Measurement equipment | Frequency counter |
| Adjustment element | RV602 |
| Specified value | 11.45±0.01 MHz |

**[Adjustment method]**

1) Connect TP604 (IC605 ⑭ PIN) to Pin ① (REG 5V) of CN601 with a jumper wire.
2) Adjust to 11.45±0.01 MHz with RV602.
3) Remove the jumper wire.
4) Connect TP604 to GND with a jumper wire.
5) Check that the frequency is more than 11.63MHz.

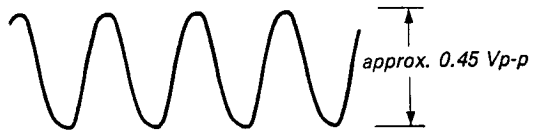


*Fig. 8-34.*

### 2. REC PCM Level Check (SP-2 board)

| Mode | Record |
|---|---|
| Signal | None |
| Measurement point | Pin ① of CN607 |
| Measurement equipment | Oscilloscope |
| Specified value | approx. 0.5 Vp-p |

**[Confirmation method]**

1) Check that the REC PCM level is approximately 0.5 Vp-p.

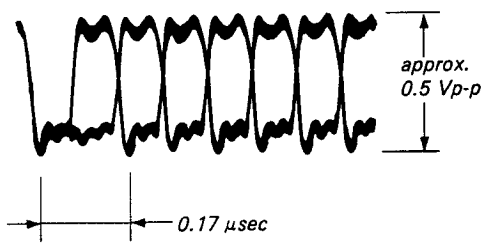


*Fig. 8-35.*

### 3. MULTI PILOT Frequency Check (SP-2 board)

| | |
|---|---|
| Mode | E-E |
| Signal | Arbitrary |
| Measurement point | Pin ㊴ of IC204 |
| Measurement equipment | Frequency counter |
| Specified value | 225.360±0.200 kHz |

**[Confirmation method]**

1) Check that the frequency is 225.360±0.200 kHz.

*Fig. 8-36.*

### 4. PCM Playback VCO Free Oscillation Frequency Adjustment (SP-2 Board)

| | |
|---|---|
| Mode | PLAYBACK, FF INDEX SEARCH and REW INDEX SEARCH |
| Signal | Arbitrary tape |
| Measurement point | TP603 |
| Measurement equipment | Frequency counter |
| Adjustment element | RV601 (PLAYBACK)<br>RV604 (FF INDEX SEARCH)<br>RV603 (REW INDEX SEARCH) |
| Specified value | 11.50±0.05 MHz (PLAYBACK)<br>10.29±0.05 MHz (FF INDEX SEARCH)<br>12.71±0.05 MHz (REW INDEX SEARCH) |

**[Connection]**

1) Connect TP600 (IC600 ① PIN) to Pin ① (REG 5V) of CN005 with a jumper wire.
2) Disconnect the CN607 from the SP-2 board.

**[Adjustment method]**

1) Set up the PLAYBACK mode.
2) Adjust to 11.50±0.05 MHz with RV601.
3) Set up the FF INDEX SEARCH mode.
4) Adjust to 10.29±0.05 MHz with RV604.
5) Set up the REW INDEX SEARCH mode.
6) Adjust to 12.71±0.05 MHz with RV603.

*Fig. 8-37.*

### 5. MULTI PILOT Detector Adjustment (MK-2/AU-22 board)

| | |
|---|---|
| Mode | E-E |
| Signal | None |
| Measurement point | 1. Pin ⑤ of IC801 on MK-2 board<br>2. Pin ⑤ of IC821 on MK-2 board |
| Measurement equipment | Frequency counter |
| Adjustment element | 1. RV801 (SP 1 CH) on MK-2 board<br>2. RV821 (LP 2 CH) on MK-2 board |
| Specified value | 225.361±1 kHz |

**Note:** Connect the frequency counter through a buffer of high impedance (approximately 10MΩ) and low capacitance (less than 10pF)

The adjustment element of LP 2 CH is shown in parentheses [ ].

**[Adjustment method]**

1) Connect the frequency counter to Pin ⑤ of IC801 [IC851].
2) Adjust to 225.361±1kHz with RV801 [RV821].

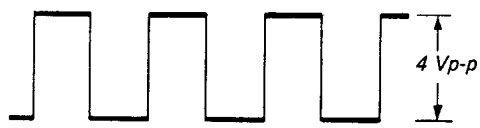


*Fig. 8-38.*

### 6. PCM Playback Level Adjustment (AD-12/AU-22 Board)

| | |
|---|---|
| Mode | Playback |
| Signal | Alignment tape: For Operation confirmation (WR5-3CSP) 400Hz section |
| Measurement point | AUDIO OUT L [R] |
| Measurement equipment | Audio level meter |
| Adjustment element | RV705 on AD-12 board |
| Specified value | −10.0±0.1dBs |

**[Adjustment method]**

1) Adjust to −10.0±0.1dBs with RV705.

**Note:** If there is a level difference between Lch and Rch, adjust to the center level.

## 7. E-E Output Level Check

| Mode | E-E |
|---|---|
| Signal | 400Hz, −10dBs: AUDIO IN L [R] |
| Measurement point | AUDIO OUT L [R] |
| Measurement equipment | Audio level meter |
| Specified value | −10±2dBs |

**[Confirmation method]**

1) Set the REC LEVEL control to [5] position.
2) Check that the REC LEVEL meter indicate −10dB.
3) Check that the AUDIO OUT L [R] level is −10±2dBs.

## 8. PCM Offset Adjustment (AD-12/AU-22 Board)

| Mode | REC |
|---|---|
| Signal | None |
| Measurement point | CH1: Pin ⑨ (ADDA) of AD-12 board<br>CH2: Pin ⑪ (WCK) of AD-12 board |
| Measurement equipment | Oscilloscope |
| Adjustment element | RV701 [RV751] on AD-12 board |
| Specified value | Equal brightness of the upper luminescent line and the lower |

**Note:** Be sure to perform the adjustment alternatly, since Lch and Rch affect each others.

**[Adjustment method]**

1) Set the REC LEVEL controls to the minimum position.
2) Adjust with RV701 [RV705] so that the brightness of the uppwer luminescent line is equal to that of the lower luminescent line.

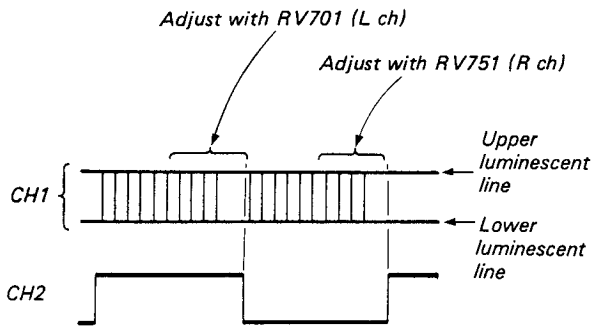


*Fig. 8-39.*

## 9. PCM Recording Level Adjustment (AD-12/AU-22 board)

| Mode | Self-recording and playback |
|---|---|
| Signal | 400Hz, −10dBs: AUDIO IN (Both L and R) |
| Measurement point | AUDIO OUT L [R] |
| Measurement equipment | Audio level meter |
| Adjustment element | RV703 [RV753] on AD-12 board |
| Specified value | −10±0.5dBs |

**Note:** Be sure that the "PCM playback level adjustment" have been completed.

**[Adjustment method]**

1) Set up E-E mode.
2) Adjust with the REC LEVEL control so that the AUDIO OUT level is −10dBs. (Both L CH and R CH).
3) Record the signal.
4) Playback the recorded portion.
5) Check that the AUDIO OUT L [R] level is −10±0.5dBs.
6) If the specified value is not satisfied, repeat 1 to 5 after turning RV703 [RV753] on AD-12 board.

## 10. Overall Frequency Characteristic Check

| Mode | Self-recording and playback |
|---|---|
| Signal | Ⓐ 400Hz, −10dBs<br>Ⓑ 20Hz, −10dBs<br>Ⓒ 14kHz, −10dBs<br>AUDIO IN L [R] |
| Measurement point | AUDIO OUT L [R] |
| Measurement equipment | Audio level meter |
| Specified value | When the playback output level of 400Hz is specified as 0dB. that of 20Hz should be 0±2dB, and that of 14kHz should be $0^{+2}_{-3}$dB. |

**[Confirmation method]**

1) Adjust the AUDIO OUT L [R] level to −10dBs with REC LEVEL control.
2) Record the signals Ⓐ to Ⓒ in sequence.
3) Playback the recorded section.
4) When the playback output level of 400Hz is specified as 0dB, that of 20Hz should be 0±2dB, that of 14kHz should be $0^{+2}_{-3}$dB.

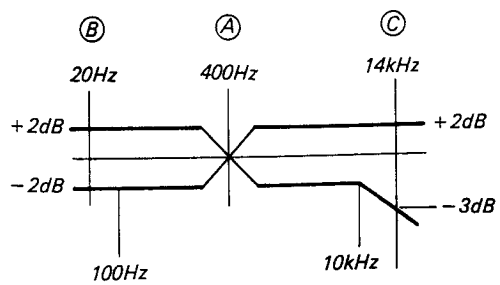


*Fig. 8-40.*

## 11. Overall Distortion Ratio Check

| | |
|---|---|
| Mode | Self-recording and playback |
| Signal | 400Hz, −10dBs: AUDIO IN L [R] |
| Measurement point | LINE OUT L [R] |
| Measurement equipment | Distortion meter |
| Specified value | Less than 0.35% |

**[Confirmation method]**

1) Adjust the AUDIO OUT L [R] level to −10dBs with REC LEVEL control.
2) Record the signal.
3) Playback the recorded section.
4) The distortion ratio should be less than 0.35%.

## 12. Overall Noise Level Check

| | |
|---|---|
| Mode | Self-recording and playback |
| Signal | Non-signal (Install shorting plugs to AUDIO IN both of L and R.) |
| Measurement point | AUDIO OUT L [R] |
| Measurement equipment | Audio level meter |
| Specified value | Less than −89dBs*1 |

**[Confirmation method]**

1) Record the signal.
2) Playback the recorded section.
3) The noise level should be less than −89dBs*1

*1 :The measured value when using IHF-A hearing sensitivity compensation filter.

## 8-4-2. AFM Audio System Adjustment

Unless otherwise specified, set the VTR switches and controles as shown below when making the adjustment.

INPUT SELECT switch .....LINE
AUDIO MONITOR (PCM/MIX/STD) switch.....STD

**[Adjustment Order]**

1) AFM carrier frequency adjustment.
2) AFM deviation adjustment.
3) E-E output level check
4) Overall level characteristics check
5) Overall frequency characteristics check
6) Overall distortion check
7) Overall noise level check

## 1. AFM Carrier Frequency Adjustment (AF-20/AU-22 Board)

| | |
|---|---|
| Mode | REC (SP mode) |
| Signal | Non-signal |
| Measurement point | Pin ⑬ (REC AFM) of AF-20 board |
| Measurement equipment | Frequency counter and oscilloscope |
| Adjustment element | RV503 on AF-20 board |
| Specified value | 1.500±0.003MHz |

**[Adjustment method]**

1) Adjust with RV503 so that it becomes 1.500±0.003MHz.
2) Check that the REC AFM level is approx. 90 mVp-p.

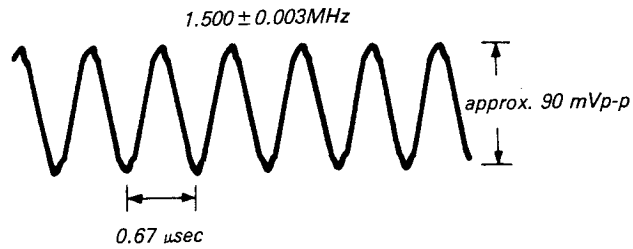


*Fig. 8-41.*

## 2. AFM Deviation Adjustment (AF-20/AU-22 Board)

| Mode | Playback |
|---|---|
| Signal | Alignment tape: For operation confirmation (WR5-3CSP) |
| Measurement point | AUDIO OUT L or R |
| Measurement equipment | Audio level meter |
| Adjustment element | RV501 on AF-20 board |
| Specified value | −10±0.2dBs |

**[Adjustment method]**

1) Adjust with RV501 so that the AUDIO OUT level becomes −10±0.2dBs.

## 3. E-E Output Level Check

The Checking element of Rch is shown in parentheses [ ].

| Mode | E-E |
|---|---|
| Signal | 400Hz, −10dBs: AUDIO IN (Both of L and R) |
| Measurement point | AUDIO OUT L [R] |
| Measurement equipment | Audio level meter |
| Specified value | −10±2dBs |

**[Confirmation method]**

1) Be sure the AUDIO OUT L [R] level is −10±2dBs.

## 4. Overall Level Characteristics Check

| Mode | Self-recording and playback (SP) |
|---|---|
| Signal | 400Hz, −10dBs: AUDIO IN (Both of L and R) |
| Measurement point | AUDIO OUT L or R |
| Measurement equipment | Audio level meter |
| Specified value | −10±3dBs. |

**[Confirmation method]**

1) Record the signal.
2) Playback the recorded section.
3) Be sure the AUDIO OUT level is −10±3dBs.

## 5. Overall Frequency Characteristics Check

| Mode | Self-recording and playback (SP) |
|---|---|
| Signal | Ⓐ 400Hz, −20dBs<br>Ⓑ 30Hz, −20dBs<br>Ⓒ 14kHz, −20dBs:<br>AUDIO IN (Both of L and R) |
| Measurement point | AUDIO OUT L or R |
| Measurement equipment | Audio level meter |
| Specified value | When the 400Hz playback output level is specified as 0dB, the playback output levels of 30Hz and 14kHz become both 0±3dB. |

**[Confirmation method]**

1) Record the signals of Ⓐ to Ⓒ in sequence.
2) Playback the recorded section.
3) Be sure that when the 400Hz playback output level is specified as 0dB, the playback output levels of 30Hz and 14kHz become both 0±3dB.

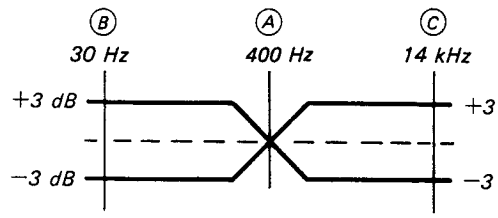


*Fig. 8-42.*

## 6. Overall Distortion Check

| Mode | Self-recording and playback |
|---|---|
| Signal | 400Hz, −10dBs: AUDIO IN (Both of L and R) |
| Measurement point | AUDIO OUT L or R |
| Measurement equipment | Distortion meter |
| Specified value | Less than 0.5%*1 |

**[Confirmation method]**

1) Record the signal
2) Playback the recorded section.
3) Be sure the distortion is less than 0.5%*1.

*1: The value when a distortion measuring filter (Fig. 8-43.) is used and that when the filter is not used is less than 1.0%.

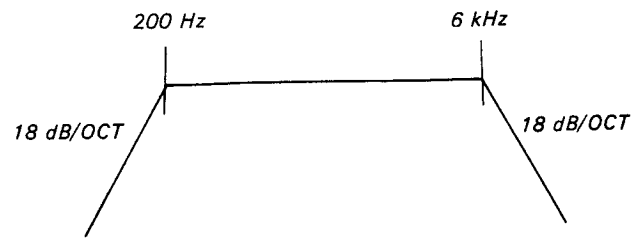


*Fig. 8-43*

### 7. Overall Noise Level Check

| | |
|---|---|
| Mode | Self-recording and playback (SP) |
| Signal | Non-signal (Install shorting plugs to AUDIO IN both of L and R.) |
| Measurement point | AUDIO OUT L or R |
| Measurement equipment | Audio level meter |
| Specified value | Less than −62dBs*2 |

**[Confirmation method]**

1) Record the signal.
2) Playback the recorded section.
3) Be sure the noise level is less than −62dBs*2.

*2: The value when an IHF-A listening sensitivity correction filter is used.

## 8-5. TUNER SYSTEM ADJUSTMENT

### 8-5-1. fH Adjustment (TU-83 board) (AEP model only)

| | |
|---|---|
| Mode | E-E |
| Signal | None |
| Measurement point | Pin ⑥ of IC003 |
| Measurement equipment | Frequency counter |
| Adjustment element | RV001 |
| Specified value | 15.625±0.01kHz |

**[Connection]**

Connect Pin ⑫ of IC003 to GND with a jumper wire.

**[Adjustment method]**

Adjust to 15.625±0.01kHz with RV001.

*Fig. 8-44*

### 8-5-2. Stereo Separation Adjustment (TS-50 Board)

| | |
|---|---|
| Mode | E-E |
| Signal | Stereo broadcasting signal by a RF signal generator<br>L CH...None<br>R CH...400Hz 30% MOD<br>•INPUT...AERIAL IN |
| Measurement point | AUDIO OUT (L) terminal |
| Measurement equipment | Audio level meter |
| Adjustment element | RV101 |
| Specified value | Minimum output level |

**[Adjustment method]**

Minimize the 400Hz output level with RV101.

## 8-6. TIMER SYSTEM ADJUSTMENT (FT-13 Board)

| | |
|---|---|
| Measurement point | Pin ⑥⓪ of IC002 |
| Measurement equipment | Frequency counter |
| Adjustment element | CV001 |
| Specified value | 1048.58±0.01kHz |

**[Connection]**

1) Connect Pin ⑤⑥ of IC002 and GND with a jumper wire.
2) Connect Pin ⑤⑨ of IC002 and GND with a jumper wire.

**[Adjustment method]**

Adjust to 1048.58±0.01kHz with CV001.

## 8-7. SECAM-PAL CONVERSION SYSTEM ADJUSTMENT (West Germany model only)

- Make this adjustment aligning the PAL video system.
- For this adjustment, use the equipment listed below.

**[Equipment Required]**

(1) PAL Colour Monitor TV
(2) Oscilloscope, Dual-trace, Bandwidth...more than 10MHz with delay mode
(3) SECAM colour-bar generator
(4) PAL vector scope
(5) Frequency counter
(6) Digital voltmeter

**Setting up during adjustment**

Video signals output by a pattern generator are used as adjustment signals when making the electrical adjustments, and these video output signals should be within the required standard. Connect an oscilloscope to CNJ002 (VIDEO IN) on the VI-20 Board. Check that the amplitudes of video signal SYNC signals, picture portions, and line ID signals are flat at approximately 0.3, 0.7, and 0.3V, respectively. Fig. 8-45. shows video signals (colour bars) used in making the electrical adjustment.

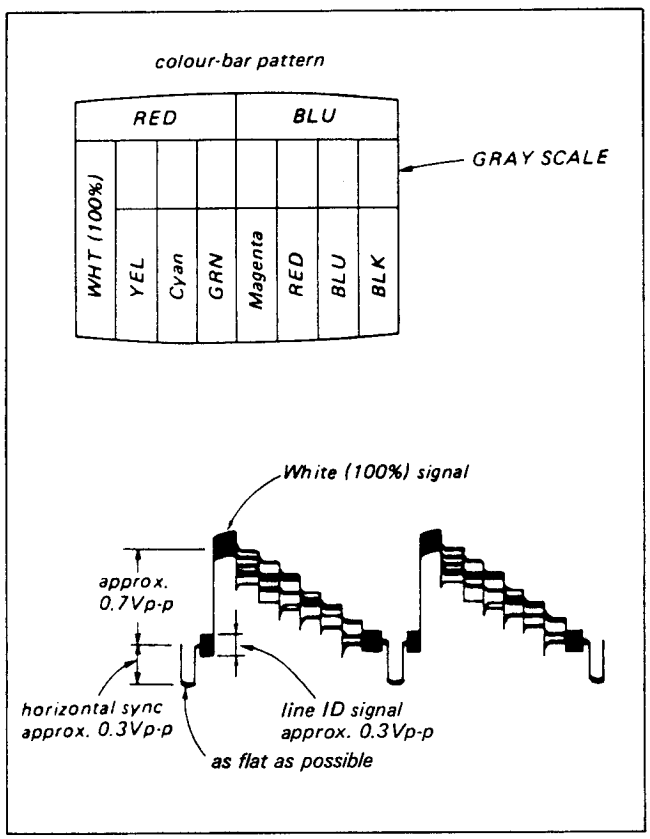


*Fig. 8-45*

### 8-7-1. fH VCO ADJUSTMENT (TC-3 Board)

| | |
|---|---|
| Mode | E-E |
| Signal | Non-signal |
| Measurement point | Pin ③ of IC002 |
| Measurement equipment | Frequency counter |
| Adjustment element | RV001 |
| Specified value | 15.630±0.01kHz |

**[Connection]**

Connect between pin ⑪ of IC002 and GND with a capacitor of 0.1 μF.

**[Adjustment method]**

1) Adjust with RV001 so that it becomes 15.630±0.01kHz.

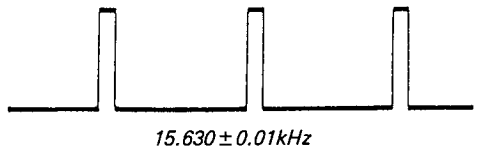


*Fig. 8-46.*

### 8-7-2. V Blanking Pulse Adjustment (TC-3 Board)

| | |
|---|---|
| Mode | E-E |
| Signal | SECAM colour-bar |
| Measurement point | CH1: Pin ① of CN002<br>CH2: Pin ⑨ of IC003 |
| Measurement equipment | Oscilloscope |
| Adjustment element | RV002, RV003 |
| Specified value | Leading edge adjustment (RV002) ... −6±1H<br>Trailing edge adjustment (RV003) ... +23±0.5H |

**[Adjustment method]**

1) Adjust with RV003 so that the trailing edge of the V blanking pulse comes to the position of +23±0.5H (+1472±32μsec) from the front edge of the vertical SYNC signal.
2) Adjust with RV002 so that the leading edge of the V blanking pulse comes to the position of −6±1H (−384±64μsec) from the front edge of the vertical SYNC signal.

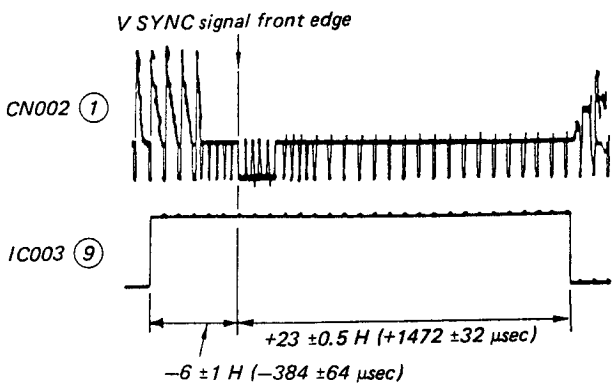


*Fig. 8-47*

### 8-7-3. Bell Filter Adjustment (TC-3 Board)

| | |
|---|---|
| Mode | E-E |
| Signal | SECAM colour-bar |
| Measurement point | TP001 (Connecting point of R053 and R054) |
| Measurement equipment | Oscilloscope |
| Adjustment element | LV002 |
| Specified value | The level variation of the chroma signal amplitude is 0±10%. |

**Note:** When performing (Adjustment method 1 ), be sure to use 1:1 probe as the signal level of TP001 is extremely small. In addition, when the adjustment is impossible because of the signal level is too small to read, perform (Adjustment method 2 ).

**[Adjustment method 1]**

1) Adjust LV002 until the waveform is flat.

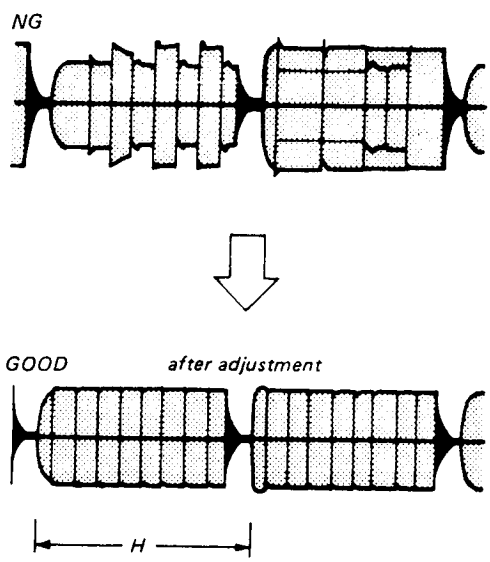


*Fig. 8-48.*

**[Adjustment method 2]**

1) Set the picture level of the monitor TV to maximum.
2) Adjust by turning LV002 so that the boarders of the respective colour-bars (especially red and blue) become vivid and stop LV002 at the position where the beat (red and magenta sections) becomes small.

### 8-7-4. FSC Adjustment (TC-3/VI-20 Board)

| | |
|---|---|
| Mode | E-E |
| Signal | SECAM colour-bar |
| Measurement point | Pin ③ W005 on VI-20 board |
| Measurement equipment | Frequency counter |
| Adjustment element | CV001 on TC-3 board |
| Specified value | 4433618.75±10Hz |

**Note:** Connect the frequency counter through a buffer with high impedance (approx. 10MΩ) and low capacity (less than 10 pF.)

**[Adjustment method]**

1) Adjust to 4433618.75±10Hz with CV001 on TC-3 board.

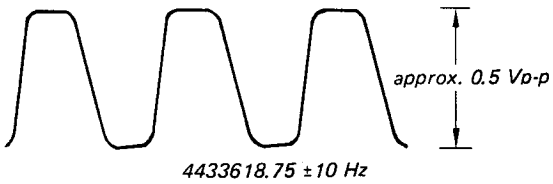


*Fig. 8-49.*

### 8-7-5. Demodulator Adjustment (TC-3 Board)

| | |
|---|---|
| Mode | E-E |
| Signal | SECAM colour-bar |
| Measurement point | Pin ① of CN002 |
| Measurement equipment | Oscilloscope |
| Adjustment element | LV001, RV005 |
| Specified value | Minimum carrier leak (less than 20 mVp-p) |

**[Adjustment method]**

1) Adjust LV001 and RV005 alternately to minimize carrier leak.

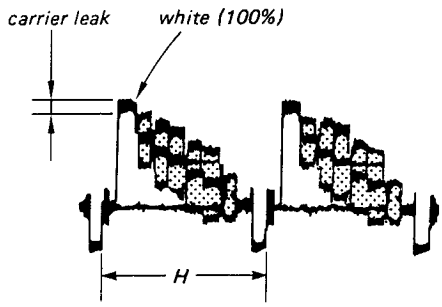


*Fig. 8-50.*

### 8-7-6. Delay Line Adjustment (TC-3, Board)

| | |
|---|---|
| Mode | E-E |
| Signal | SECAM colour-bar |
| Measurement point | VIDEO OUT terminal |
| Measurement equipment | PAL vector scope (75Ω terminated) |
| Adjustment element | LV003, RV007 |
| Specified value | 1. Be sure that RED and CYAN are within the (⊞).<br>2. Be sure that other colours than the above are within (□). |

**[Adjustment method]**

1) Adjust with LV003 and RV007 alternately so that the colour luminescent spots come into the specified frame.

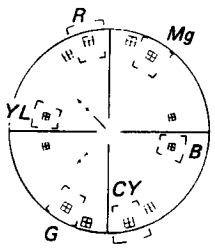


*Fig. 8-51*

### 8-7-7. Y/C Mix Adjustment (TC-3 Board)

| | |
|---|---|
| Mode | E-E |
| Signal | SECAM colour-bar |
| Measurement point | Pin ① of CN002 |
| Measurement equipment | Oscilloscope |
| Adjustment element | RV004 |
| Specified value | When the SYNC level is specified as 100%, the burst level becomes 100±5%. |

**[Adjustment method]**

1) Adjust with RV004 so that burst level becomes equivalent to the SYNC level.

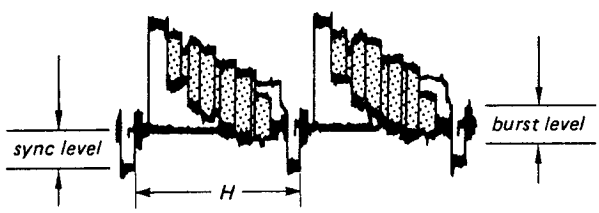


*Fig. 8-52*

### 8-7-8. PAL/SECAM Distinction Adjustment (TC-3 Board)

| | |
|---|---|
| Mode | E-E |
| Signal | SECAM colour-bar |
| Measurement point | 1. Pin ⑭ of IC001<br>2. Pin ④ of CN002 |
| Measurement equipment | Digital voltmeter |
| Adjustment element | RV006 |
| Specified value | 12.0±0.5 Vdc |

**[Connection]**

Connect an adjustable resistor of 2.2 kΩ in parallel with LV002.

**[Adjustment method]**

1) Set the adjustable resistor of 2.2 kΩ to its maximum resistance value.
2) Confirm the DC voltage of pin ⑭ of IC001 is approx. 6.5 Vdc.
3) Make the resistance value of the adjustable resistor of 2.2 kΩ gradually small and stop it at the position when the DC voltage of pin ⑭ of IC001 becomes approx. 5 V dc after suddenly dropped.
4) Set RV006 to the position that it is turned fully to counterclockwise (↺).

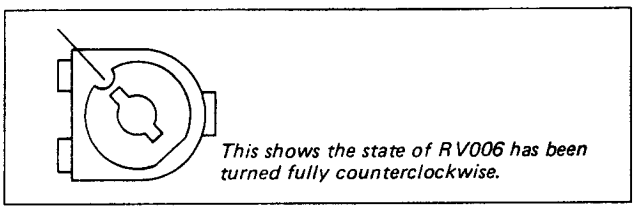


*Fig. 8-53*

5) Connect a digital voltmeter to pin ④ of CN002 and confirm that the DC voltage is 0 Vdc.
6) Turn RV006 gradually clockwise (↻) and stop it at the position when the DC voltage at pin ④ of CN002 becomes 12±0.5 Vdc after suddenly increased.

## 8-8. ADJUSTMENT ELEMENT LOCATION

**VI-20** BOARD (SOLDER SIDE)

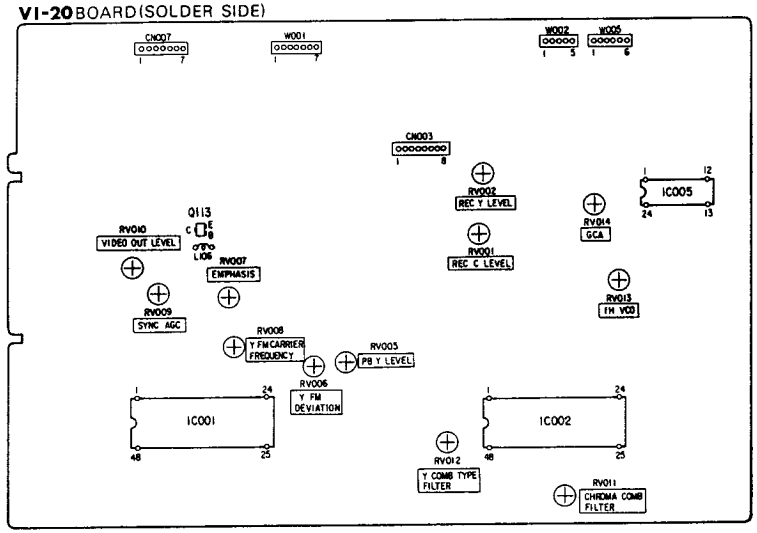


**CH-44** BOARD (COMPONENT SIDE)

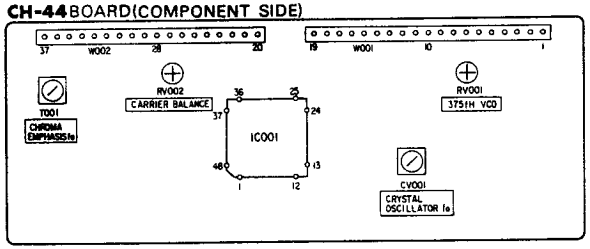


**RP-36** BOARD (COMPONENT SIDE)

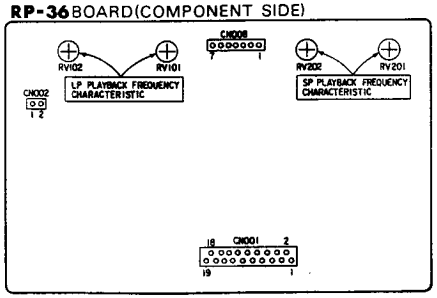


**DT-63** BOARD (SOLDER SIDE)

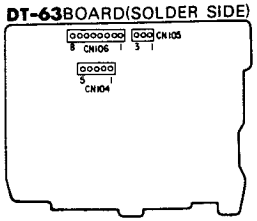


**SP-2** BOARD (COMPONENT SIDE)

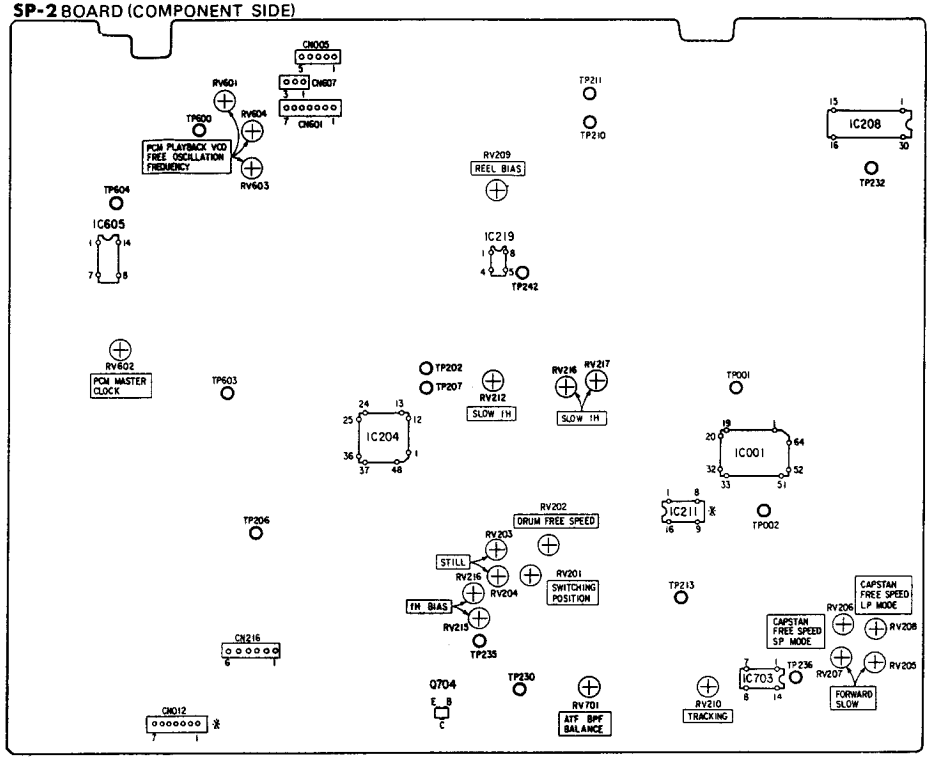


※ mark is soldering side.

**AF-20** BOARD (SOLDER SIDE)

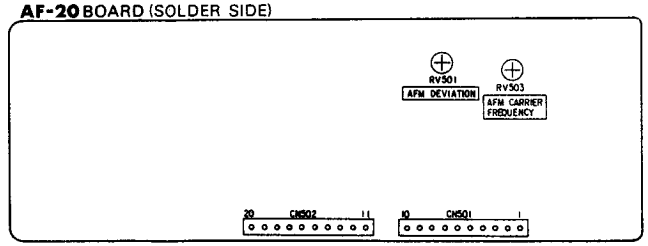


**AD-12** BOARD (COMPONENT SIDE)

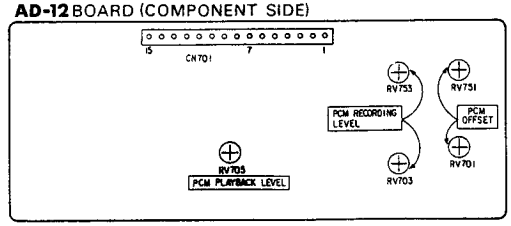


**TS-50** BOARD (SOLDER SIDE)

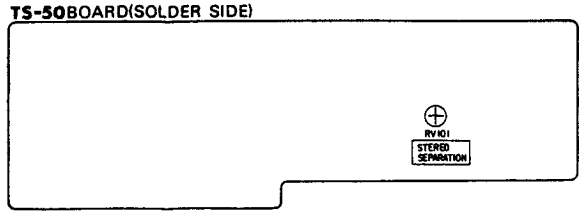

**FT-13**BOARD(SOLDER SIDE)

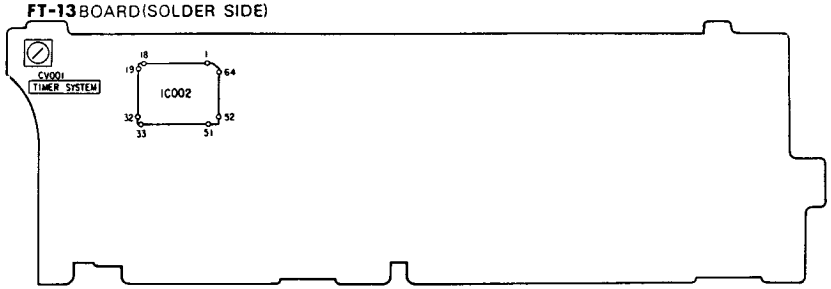


**TU-83**BOARD(SOLDER SIDE)

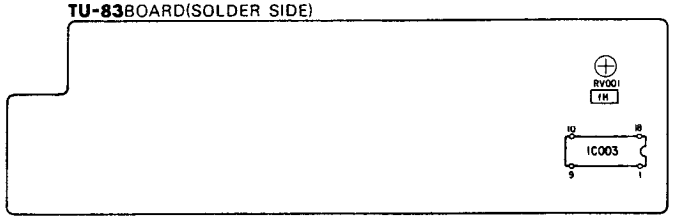


**DR-35**BOARD(SOLDER SIDE)

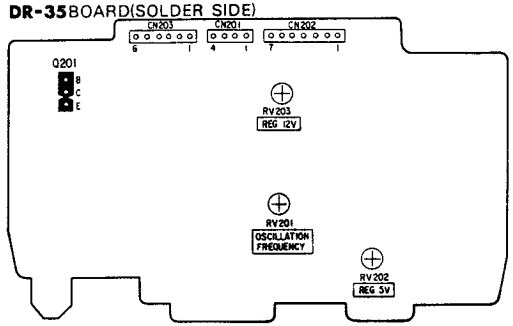


**MK-2**BOARD(SOLDER SIDE)

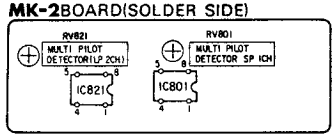


TC-3 BOARD (COMPONENT SIDE)

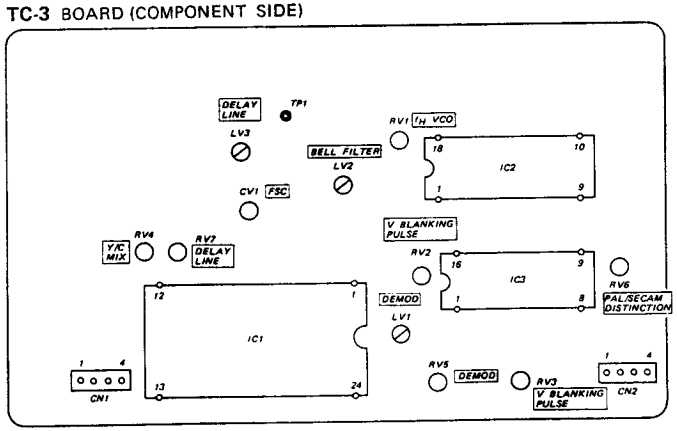

# RMT-425

# SERVICE MANUAL

## SPECIFICATIONS

| | |
|---|---|
| Remote control system | Infrared control |
| Power requirements | 4.5 V dc, 3 R6 (size AA) batteries |
| Dimensions | Approx. 105 × 40 × 160 mm (w/h/d) (4 1/10 × 1 1/2 × 6 1/4 in.) incl. projecting parts and controls |
| Weight | Approx. 220 g (8oz) without batteries |

REMOTE COMMANDER

SONY®

## 1. LOCATION AND FUNCTION OF CONTROLS

B-1

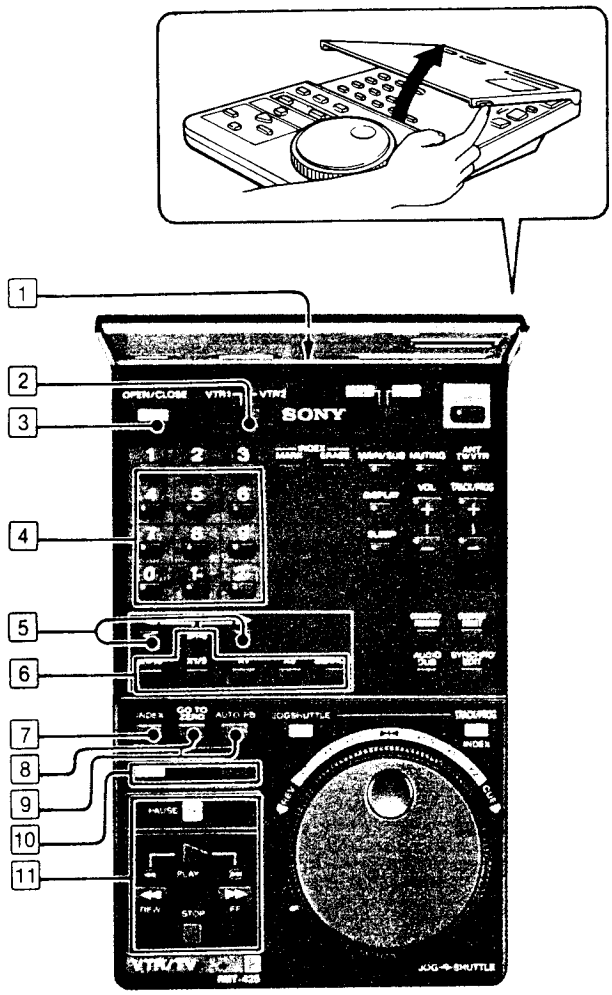


B-1

### FUNCTION OF CONTROLS

1 **Transmitter**

2 **Command mode selector** (Page 356)
Select the command mode of the equipment you want to operate with the Commander.
To operate this VTR, set to the same position as that of the COMMAND MODE selector inside the upper compartment of the VTR.

3 **OPEN/CLOSE button**

4 **Number buttons**
Use for selecting programmes.
For 0 through 9, press corresponding single-digit numerals.
For 10 through 19, press "1–" for tens-digit and then ones-digit.
For 20 through 29, press "2–" and then ones-digit.

5 **◀II and II▶ FRAME buttons** (Page 24)
In the still picture mode, press ◀II to reverse the picture by one frame, and II▶ to advance the picture by one frame (frame-by-frame picture).
If the button is kept depressed, the picture moves continuously.
These buttons are also used to select the direction of playback.
Press ◀II to reverse picture, and II▶ for forward picture.

6 **Variable speed playback buttons** (Page 24)
During playback, press one of these buttons to select the desired playback speed.
▶|◀ (still picture), x1/10, x1/5, x1, x2, SEARCH(for picture search)

7 **INDEX button**

8 **GO TO ZERO button**

9 **AUTO PB (playback) button**
Press to play back a tape automatically from the beginning of the tape after rewinding.

10 **● REC (record) buttons**
To start recording, press these buttons simultaneously.

11 **Tape transport buttons**
II PAUSE
▶ PLAY
◀◀ REW
▶▶ FF
■ STOP

B-2

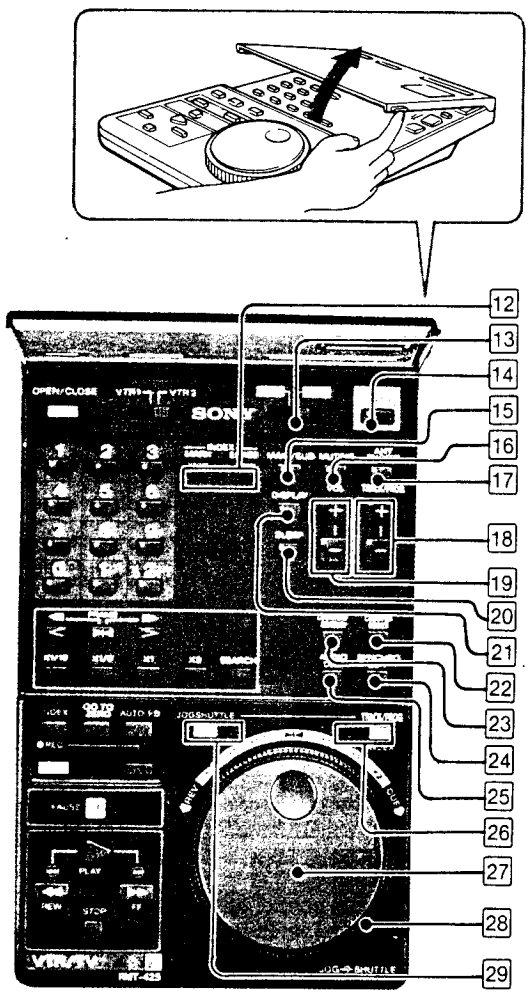


B-2

12 **INDEX MARK and ERASE buttons**

13 **Remote control TV/VTR selector** (Page 356)
Normally set to VTR for operating the recorder. To operate certain Sony TVs (having a R mark), set to TV.

14 **ON switch**

15 **MAIN/SUB button**
Each pressing selects the MAIN, SUB or MAIN/SUB language of the bilingual programme or the played back biligual tape.

16 **MUTING button**

17 **ANT TV/VTR button**

18 **TRACK/PROG (programme) buttons**

19 **VOL (volume) buttons**

20 **SLEEP button**

21 **DISPLAY button**
Press to retain or extinguish the on-screen display of certain Sony TVs (having a R mark).

22 **COUNTER RESET button**

23 **COUNTER/REMAIN button**

24 **SYNCHRO EDIT button**

25 **AUDIO DUB (dubbing) button**

26 **TRACK/PROG/INDEX function button and lamp**
Press when using the JOG dial for digital multi audio track selection, programme and index number selection.

27 **JOG dial**

28 **SHUTTLE ring**

29 **JOG SHUTTLE function button and lamp** (Page 23)
Press this button when using the JOG dial and SHUTTLE ring for various speed playback.

- The buttons with the similar name or mark as the buttons on the VTR have the same function as those of the VTR.
- The buttons marked with an orange dot can be used to operate certain Sony remote control TVs.

## 2. REMOTE COMMANDER SET-UP

B-3

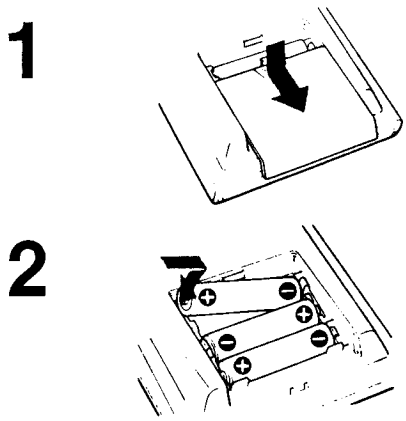


B-3

**Battery insertion**

1 Open the lid.
2 Insert three R6(AA) batteries with correct polarity.
3 Slide and close the lid.

**Battery life**

In normal operation, batteries will last for about three months.
When the batteries are exhausted, the JOG dial and SHUTTLE ring on the Commander will not function, and then the indicator will not light when the buttons on the Commander are pressed.

**If the Remote Commander is not to be used for a long period of time,**
remove the batteries to avoid possible damage from battery leakage.

B-4

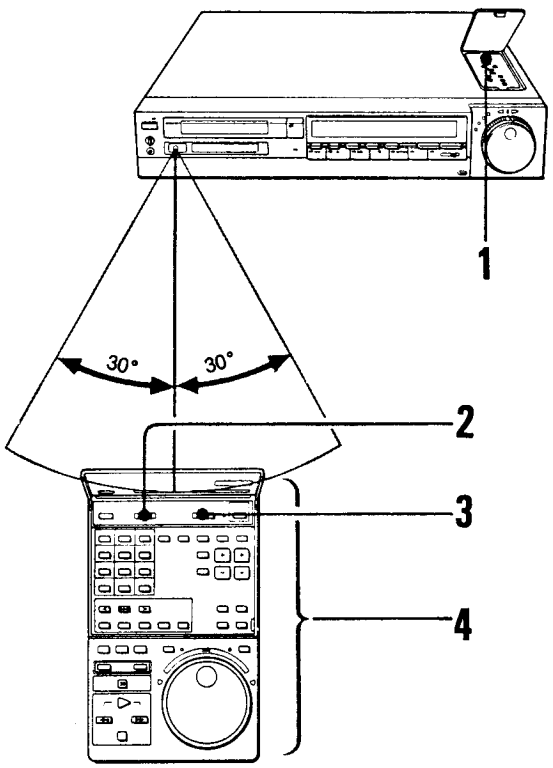


B-4

### TO CONTROL THIS VTR

1 Set the COMMAND MODE selector in the upper compartment to VTR 1 or VTR 2.
2 Set the command mode selector on the Commander to the same position as that on the VTR.*
3 Set TV/VTR to VTR.
4 Press the required buttons.

* Command mode should be selected correctly according to which equipment you use with this VTR simultaneously.

**Notes on remote control operation**

- There should be no obstacles between the Commander and the remote sensor.
- Operable range is limited.
  Distance: Approx. 7 meters from the remote sensor.
  Angle: Approx. ±30 degrees from the centre.
  The shorter the distance between the Commander and the equipment, the wider the angle within which the equipment can be controlled.

# JA-2 | JB-7

## 3. PRINTED WIRING BOARDS

**Note:**

- ○— : indicates a lead wire mounted on the component side.
- ●— : indicates a lead wire mounted on the printed side.
- ⊗ : Through hole.
- : Pattern from the side which enables seeing.
- : Pattern of the rear side.
- : B+ pattern from the side which enables seeing.
- : Carbon pattern.

When indicating parts by reference number, please include the board name.

**Caution:**

Pattern face side: (Solder Side) Parts on the pattern face side seen from the pattern face are indicated.

Parts face side: (Component Side) Parts on the parts face side seen from the parts face are indicated.

**JB-7** BOARD (COMPONENT SIDE)

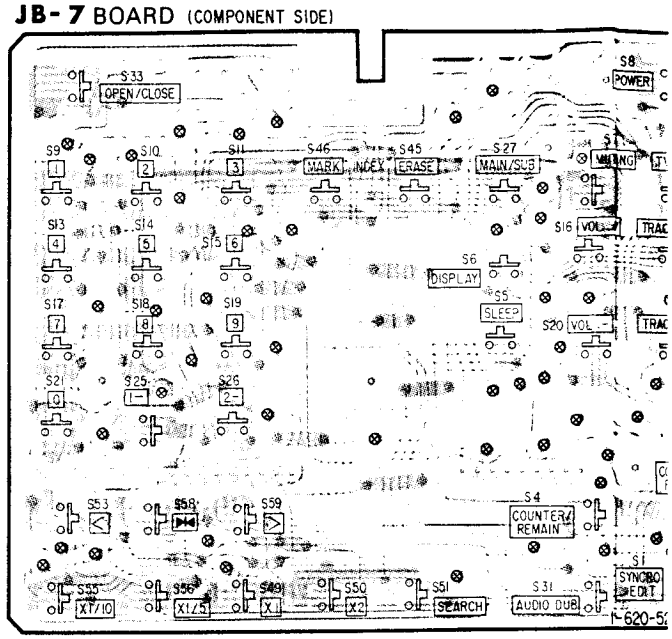


**JA-2** BOARD (COMPONENT SIDE)

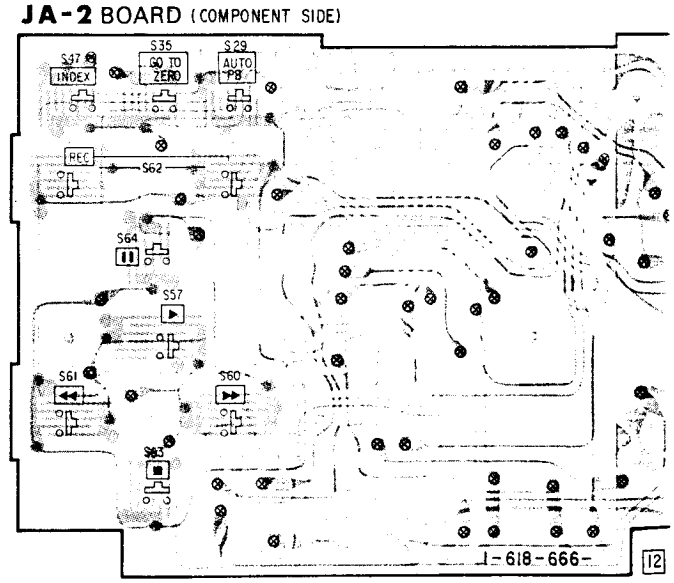


### SEMICONDUCTORS

**M50461-039FP**

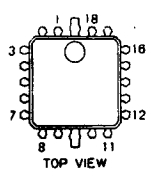


**μPD7556G-506**

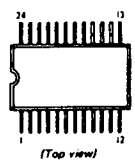


**2SA1048-GR**
**2SA1115**
**DTA144ES**

**2S**

BOARD (COMPONENT SIDE)

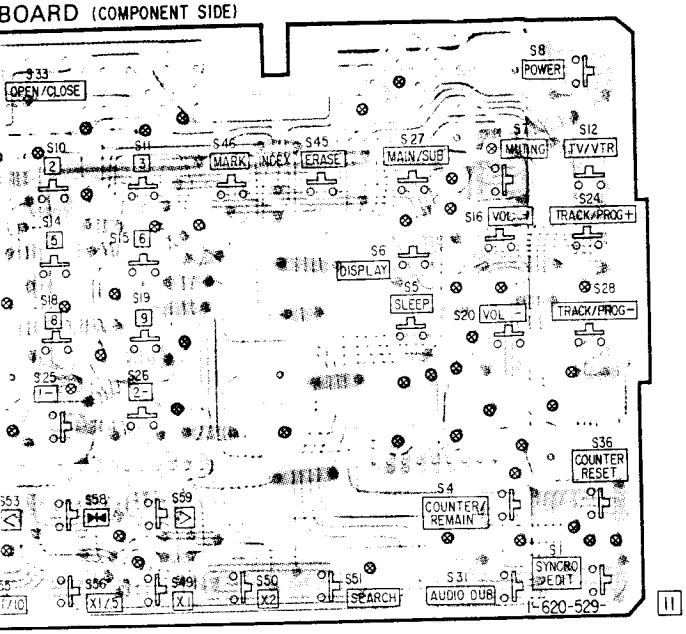


JB-7 BOARD (SOLDER SIDE)

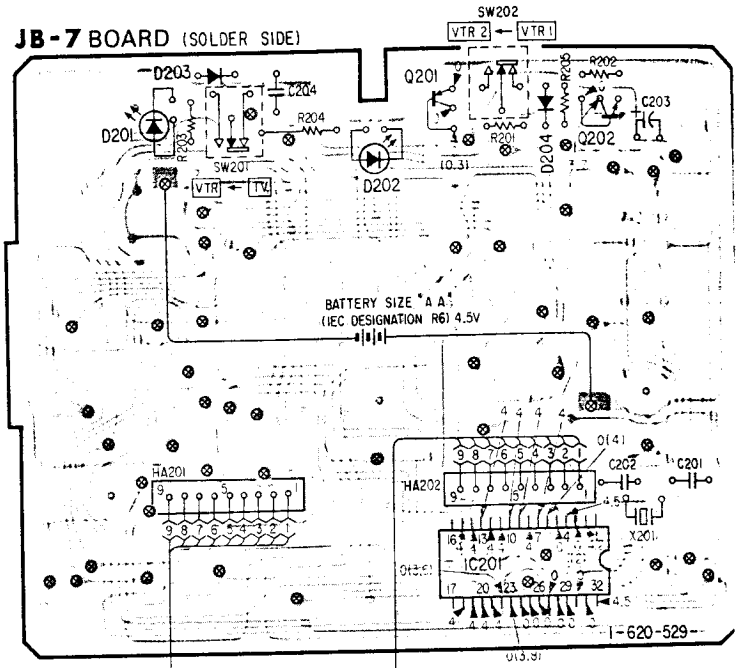


2 BOARD (COMPONENT SIDE)

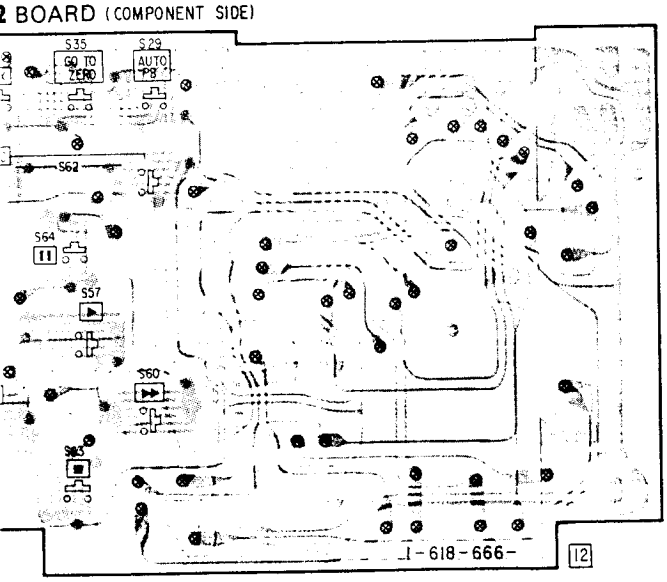


JA-2 BOARD (SOLDER SIDE)

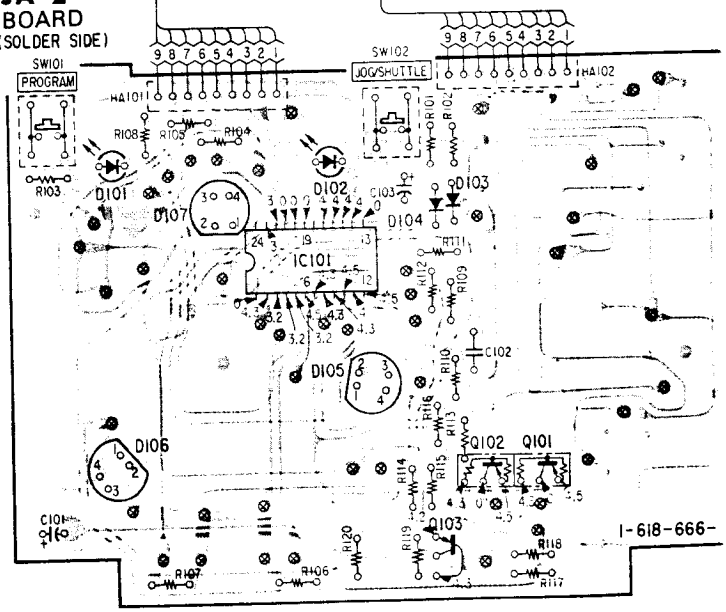


## ICTORS

| | | | | | | | | |
|---|---|---|---|---|---|---|---|---|
| μPD7556G-506 | 2SA1048-GR<br>2SA1115<br>DTA144ES | 2SA1175 | 2SC2673 | 1SS119<br>1SS133<br>1SS148 | GP2509 | SLP144B | SLF |
| 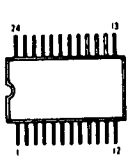 | | | 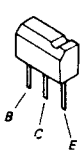 | 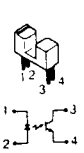 | 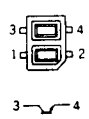 | | |

# 4. SCHEMATIC DIGRAM

**JA-2** **JB-7**

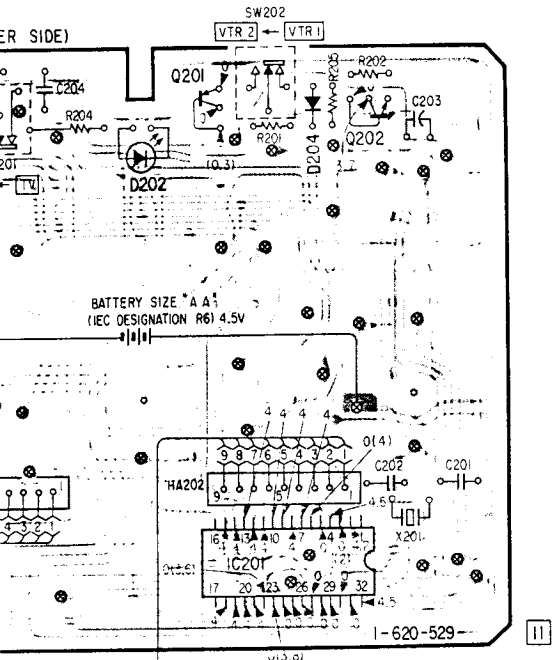


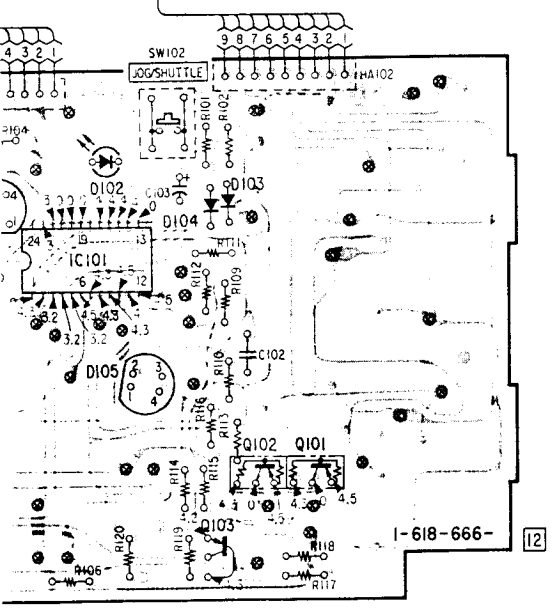


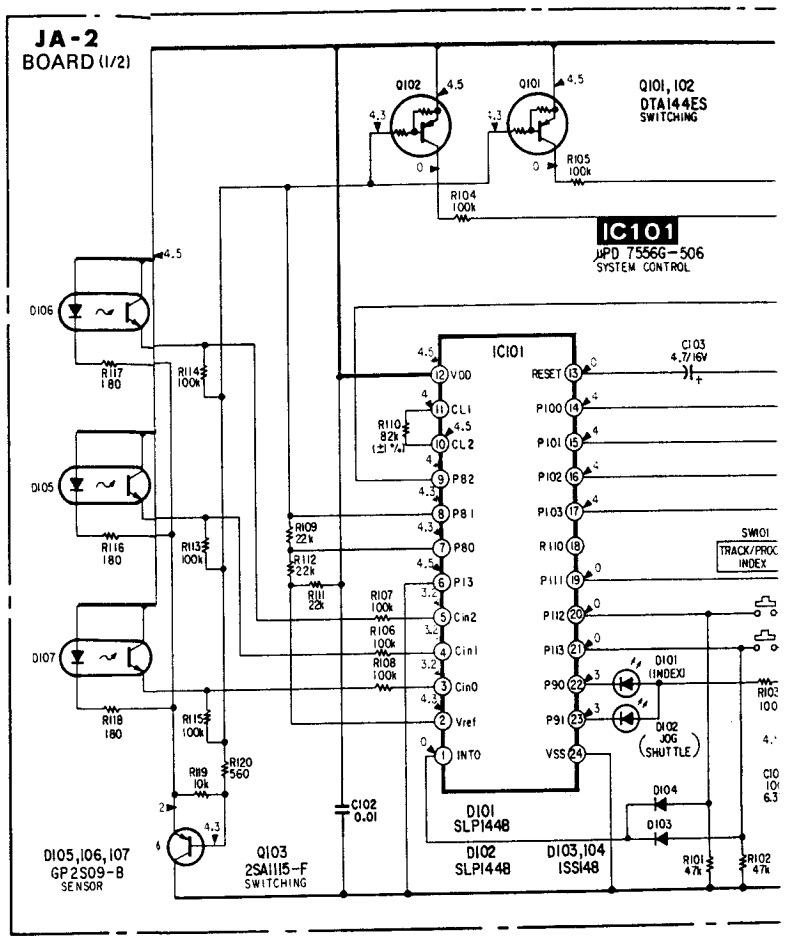


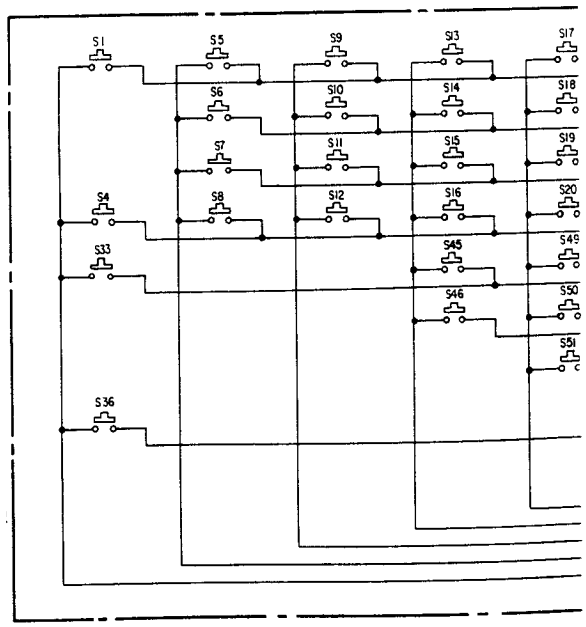


**GP2509** **SLP144B** **SLR932A**

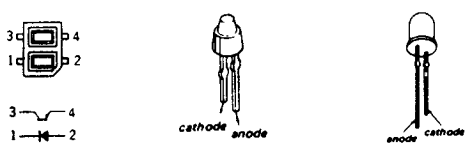

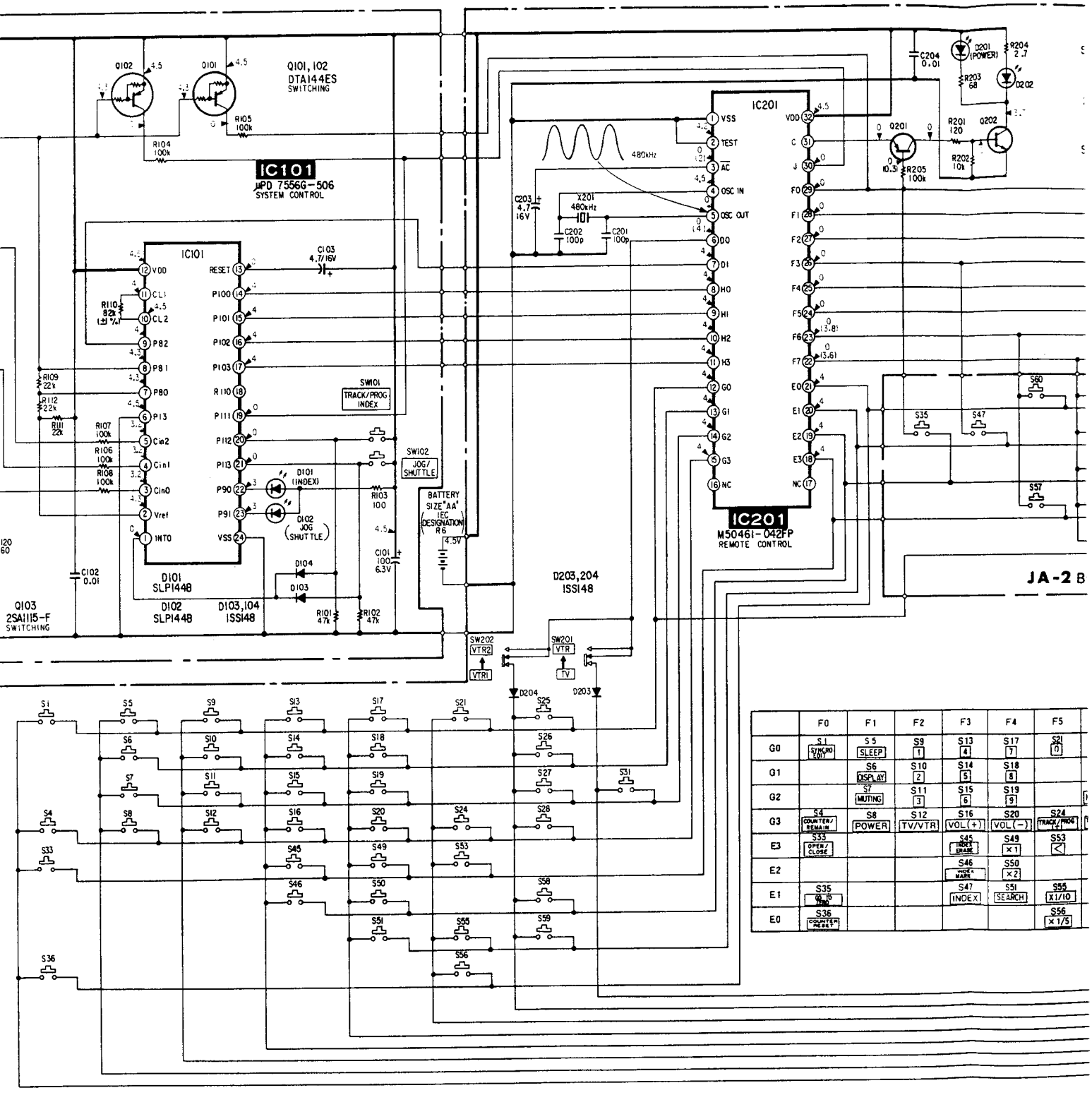


| | F0 | F1 | F2 | F3 | F4 | F5 |
|---|---|---|---|---|---|---|
| G0 | S1 SYNCRO EDIT | S5 SLEEP | S9 1 | S13 4 | S17 7 | S21 0 |
| G1 | | S6 DISPLAY | S10 2 | S14 5 | S18 8 | |
| G2 | | S7 MUTING | S11 3 | S15 6 | S19 9 | |
| G3 | S4 COUNTER/ REMAIN | S8 POWER | S12 TV/VTR | S16 VOL(+) | S20 VOL(−) | S24 TRACK/PROG (E) |
| E3 | S33 OPEN/ CLOSE | | | S45 INDEX ERASE | S49 ×1 | S53 < |
| E2 | | | | S46 INDEX MARK | S50 ×2 | |
| E1 | S35 CUE TO PROG | | | S47 INDEX | S51 SEARCH | S55 ×1/10 |
| E0 | S36 COUNTER PRESET | | | | | S56 ×1/5 |

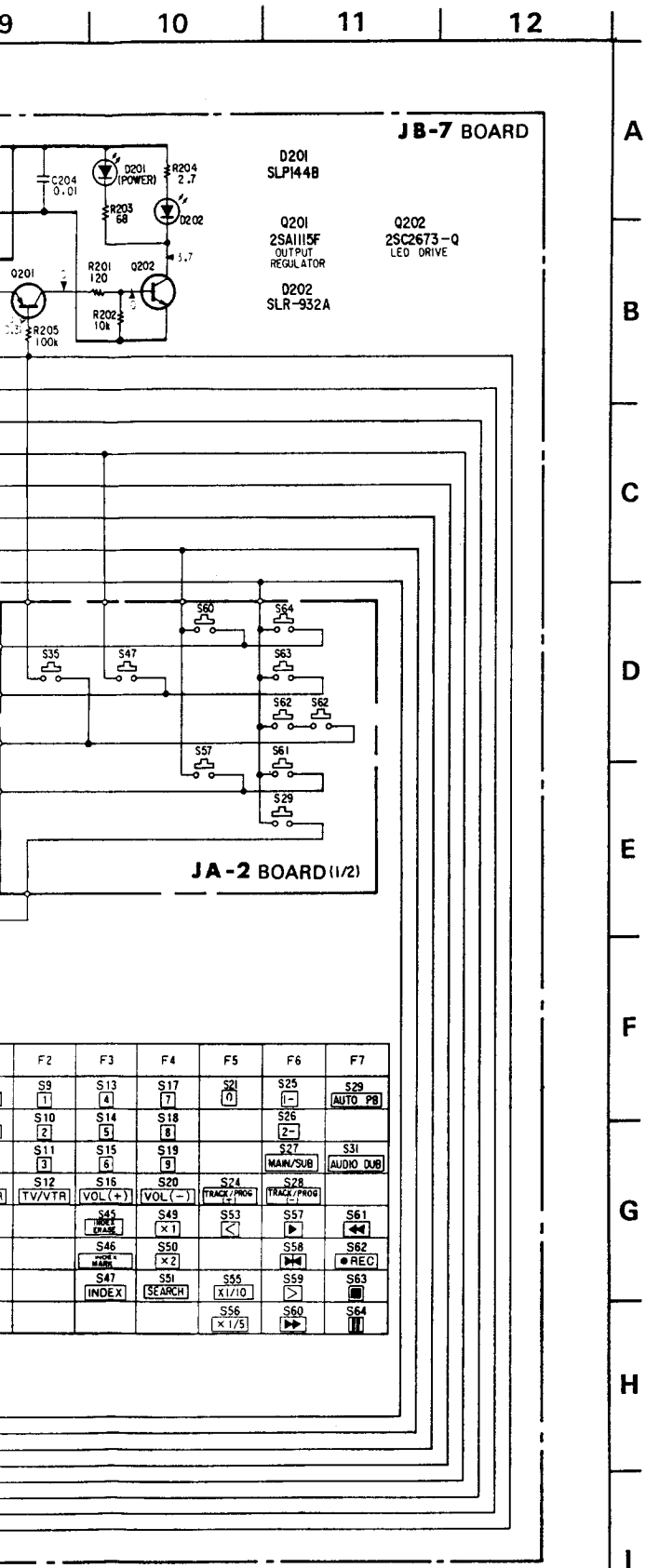


**Note:**

- All resistors are in ohms, 1/6W unless otherwise noted. kΩ: 1000Ω, MΩ: 1000kΩ.
- All capacitors are in μF unless otherwise noted. pF : μμF. 50V or less are not indicated except for electrolytice. and tantalums.
- All variable and adjustable resistors have characteristic curve B, unless otherwise noted.
- : nonflammable resistor.
- : fusible resistor.
- : panel designation.
- △ : internal component.
- : adjustment for repair.
- : B + bus.
- Voltages are dc with respect to ground unless otherwise noted.
- Readings are taken with a digital multimeter (DC10MΩ).
- Voltage variations may be noted due to normal production tolerances.

## 5. EXPLODED VIEW

NOTE:

- Itmes with no part number and no description are not stocked because they are seldom required for routine service.
- The construction parts of an assembled part are indicated with a collation number in the remark column.
- Items marked "*" are not stocked since they are seldom required for routine service. Some delay should be anticipated when ordering these items.
- The mechanical parts with no reference number in the exploded views are not supplied.

The components identified by shading and mark ⚠ are critical for safety. Replace only with part number specified.

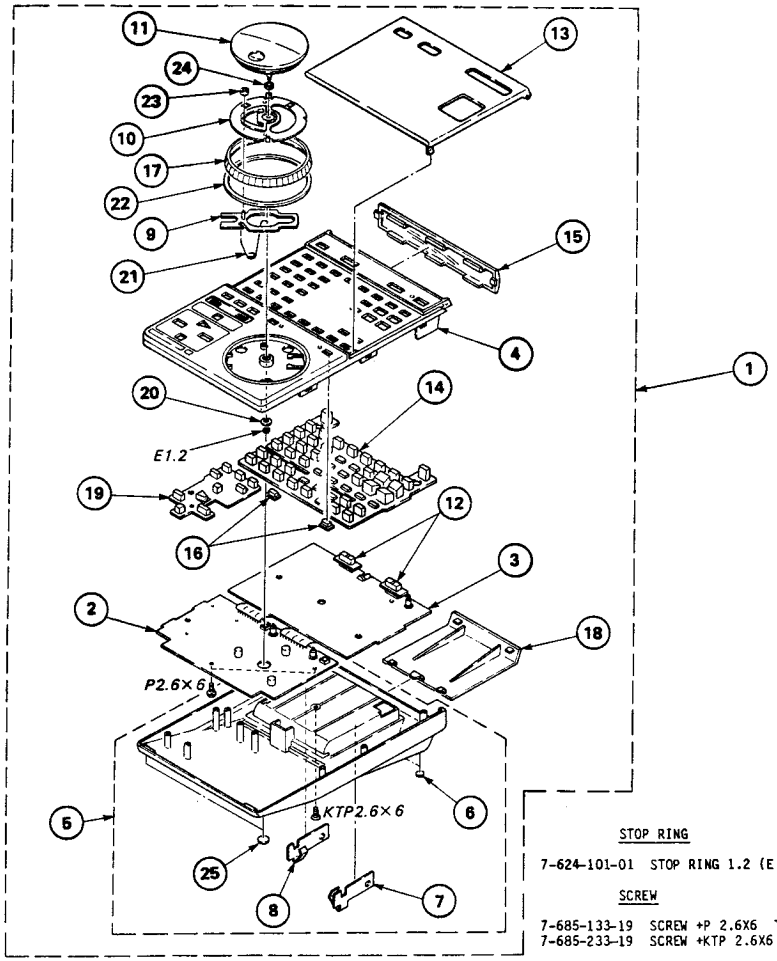


STOP RING

7-624-101-01 STOP RING 1.2 (E TYPE)

SCREW

7-685-133-19 SCREW +P 2.6X6 TYPE1
7-685-233-19 SCREW +KTP 2.6X6 TYPE2NON-SLIT

| No. | Part No. | Description | Remark |
|---|---|---|---|
| 1 | A-6767-420-A | COMMANDER ASSYKNOB | 2-25 |
| 2 | *1-618-666-12 | JA-2 BOARD | |
| 3 | *1-620-529-11 | JB-7 BOARD | |
| 4 | X-2357-252-1 | CASE ASSY, UPPER | |
| 5 | X-2357-215-1 | CASE ASSY, LOWER | 6-8, 25 |
| 6 | 4-374-469-01 | FOOT, RUBBER | |
| 7 | 2-383-106-00 | TERMINAL (D), BATTERY | |
| 8 | 4-350-925-00 | TERMINAL (C), BATTERY | |
| 9 | X-3691-605-1 | PLATE ASSY, SLIDE | |
| 10 | X-3691-615-1 | PLATE ASSY, DIAL, SHUTTLE | |
| 11 | X-3691-672-1 | DIAL (R) (N) ASSY, JOG | |
| 12 | 2-357-217-01 | KNOB, SLIDE | |
| 13 | 2-357-221-61 | LID, UPPER | |
| 14 | 2-357-222-11 | RUBBER (B), CONTACT | |
| 15 | 2-357-223-01 | PANEL, FRONT | |
| 16 | 2-357-224-01 | BUTTON | |
| 17 | 2-357-225-01 | DIAL, SHUTTLE | |
| 18 | 2-357-227-01 | COVER, BATTERY | |
| 19 | 2-357-292-01 | RUBBER, CONTACT | |
| 20 | 3-320-412-01 | WASHER (1.4), SPECIAL | |
| 21 | 3-691-634-01 | SPRING, TORSION | |
| 22 | 3-691-635-01 | SPACER, SHUTTLE | |
| 23 | 3-691-648-01 | ROLLER | |
| 24 | 3-701-439-21 | WASHER | |
| 25 | 2-270-305-00 | FOOT, RUBBER | |



# JA-2 | JB-7

## 6. ELECTRICAL PARTS LIST

NOTE:

The components identified by shading and mark ⚠ are critical for safety. Replace only with part number specified.

When indicating parts by reference number, please include the board name.

- Due to standardization, replacements in the parts list may be different from the parts specified in the diagrams or the components used on the set.
- All variable and adjustable resistors have characteristic curve B, unless otherwise noted.

RESISTORS
- All resistors are in ohms
- F : nonflammable

- Items marked "*" are not stocked since they are seldom required for routine service. Some delay should be anticipated when ordering these items.

CAPACITORS
- MF : μF, PF : μμF

COILS
- MMH : mH, UH : μH

| Ref.No | Part No. | Description | | | Remark |
|---|---|---|---|---|---|
| | *1-618-666-12 | JA-2 BOARD | | | |
| | | ********** | | | |
| | | CAPACITOR | | | |
| C101 | 1-124-225-00 | ELECT | 100MF | 20% 6.3V | |
| C102 | 1-101-004-00 | CERAMIC | 0.01MF | 50V | |
| C103 | 1-124-245-00 | ELECT | 4.7MF | 20% 16V | |
| | | DIODE | | | |
| D101 | 8-719-901-44 | DIODE SLP1448 | | | |
| D102 | 8-719-901-44 | DIODE SLP1448 | | | |
| D103 | 8-719-911-19 | DIODE 1SS119 | | | |
| D104 | 8-719-911-19 | DIODE 1SS119 | | | |
| D105 | 8-719-939-11 | GP2S09-B | | | |
| D106 | 8-719-939-11 | GP2S09-B | | | |
| D107 | 8-719-939-11 | GP2S09-B | | | |
| | | IC | | | |
| IC101 | 8-759-111-60 | IC UPD7556G-506 | | | |
| | | TRANSISTOR | | | |
| Q101 | 8-729-900-65 | TRANSISTOR DTA144ES | | | |
| Q102 | 8-729-900-65 | TRANSISTOR DTA144ES | | | |
| Q103 | 8-729-611-53 | TRANSISTOR 2SA1115-F | | | |
| | | RESISTOR | | | |
| R101 | 1-249-437-11 | CARBON | 47K | 5% 1/6W | |
| R102 | 1-249-437-11 | CARBON | 47K | 5% 1/6W | |
| R103 | 1-249-405-11 | CARBON | 100 | 5% 1/6W | |
| R104 | 1-249-441-11 | CARBON | 100K | 5% 1/6W | |
| R105 | 1-249-441-11 | CARBON | 100K | 5% 1/6W | |
| R106 | 1-249-441-11 | CARBON | 100K | 5% 1/6W | |
| R107 | 1-249-441-11 | CARBON | 100K | 5% 1/6W | |
| R108 | 1-249-441-11 | CARBON | 100K | 5% 1/6W | |
| R109 | 1-249-433-11 | CARBON | 22K | 5% 1/6W | |
| R110 | 1-215-467-00 | METAL | 82K | 1% 1/6W | |
| R111 | 1-249-433-11 | CARBON | 22K | 5% 1/6W | |
| R112 | 1-249-433-11 | CARBON | 22K | 5% 1/6W | |
| R113 | 1-249-441-11 | CARBON | 100K | 5% 1/6W | |
| R114 | 1-249-441-11 | CARBON | 100K | 5% 1/6W | |
| R115 | 1-249-441-11 | CARBON | 100K | 5% 1/6W | |
| R116 | 1-247-813-00 | CARBON | 180 | 5% 1/6W | |
| R117 | 1-247-813-00 | CARBON | 180 | 5% 1/6W | |
| R118 | 1-247-813-00 | CARBON | 180 | 5% 1/6W | |
| R119 | 1-249-429-11 | CARBON | 10K | 5% 1/6W | |
| R120 | 1-249-414-11 | CARBON | 560 | 5% 1/6W | |
| | | SWITCH | | | |
| SW101 | 1-553-856-00 | SWITCH, KEY BOARD | | | |
| SW102 | 1-553-856-00 | SWITCH, KEY BOARD | | | |
| ********** | | | | | |

| Ref.No | Part No. | Description | | | Remark |
|---|---|---|---|---|---|
| | *1-620-529-11 | JB-7 BOARD | | | |
| | | ********** | | | |
| | 2-357-218-01 | TERMINAL (A), BATTERY | | | |
| | 2-357-219-01 | TERMINAL (B), BATTERY | | | |
| | | CAPACITOR | | | |
| C201 | 1-102-973-00 | CERAMIC | 100PF | 10% 50V | |
| C202 | 1-102-973-00 | CERAMIC | 100PF | 10% 50V | |
| C203 | 1-124-245-00 | ELECT | 4.7MF | 20% 16V | |
| C204 | 1-101-004-00 | CERAMIC | 0.01MF | 50V | |
| | | DIODE | | | |
| D201 | 8-719-901-44 | DIODE SLP1448 | | | |
| D202 | 8-719-912-39 | DIODE SLR-932A | | | |
| D203 | 8-719-911-19 | DIODE 1SS119 | | | |
| D204 | 8-719-911-19 | DIODE 1SS119 | | | |
| | | IC | | | |
| IC201 | 8-759-603-88 | IC M50461-042FP | | | |
| | | TRANSISTOR | | | |
| Q201 | 8-729-204-83 | TRANSISTOR 2SA1048-GR | | | |
| Q202 | 8-729-967-32 | TRANSISTOR 2SC2673 | | | |
| | | RESISTOR | | | |
| R201 | 1-249-406-11 | CARBON | 120 | 5% 1/6W | |
| R202 | 1-249-429-11 | CARBON | 10K | 5% 1/6W | |
| R203 | 1-249-403-11 | CARBON | 68 | 5% 1/6W | |
| R204 | 1-249-452-11 | CARBON | 2.7 | 5% 1/4W | |
| R205 | 1-249-441-11 | CARBON | 100K | 5% 1/6W | |
| | | SWITCH | | | |
| SW201 | 1-553-977-00 | SWITCH, SLIDE | | | |
| SW202 | 1-553-977-00 | SWITCH, SLIDE | | | |
| | | CRYSTAL | | | |
| X201 | 1-527-476-00 | OSCILLATOR, CERAMIC (480KHz) | | | |
| ********** | | | | | |